March 7, 1961 N. C. PRICE 2,973,921

WINGLESS SUPERSONIC AIRCRAFT

Filed March 24, 1958 5 Sheets-Sheet 1

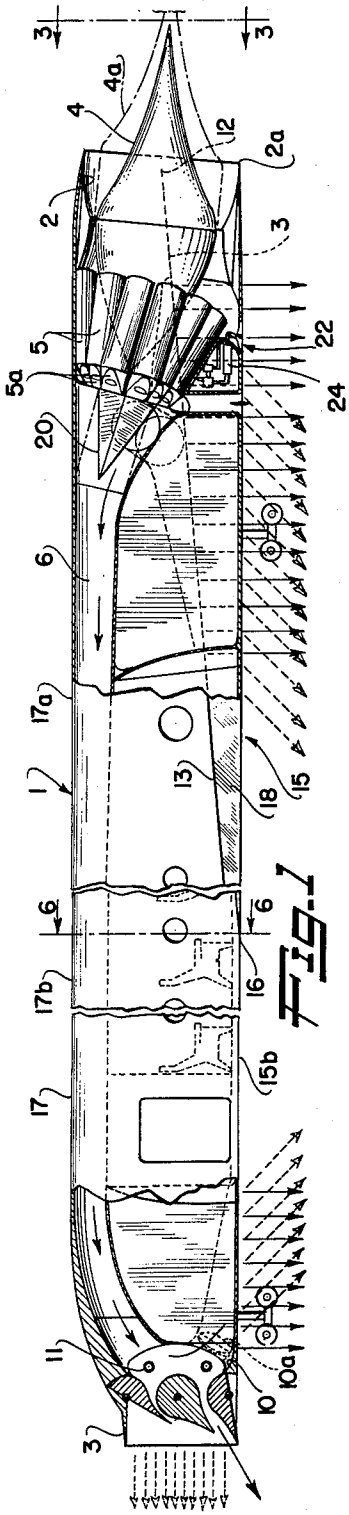

FIG. 1

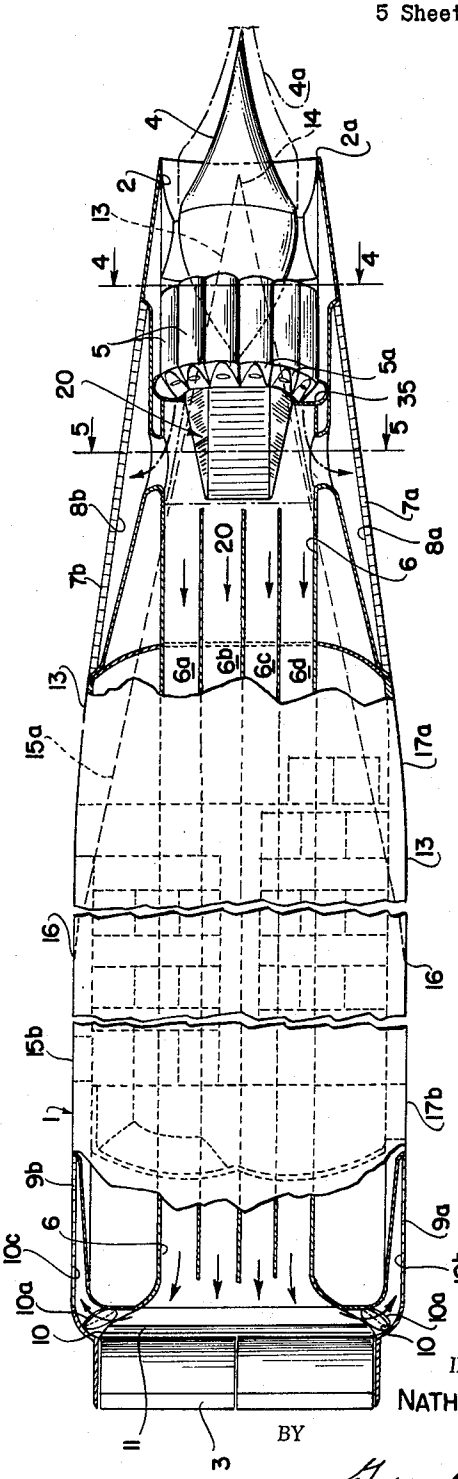

FIG. 2

INVENTOR.
NATHAN C. PRICE
BY
George C. Sullivan
Agent

1 || @HighEarthOrbit_ linktr.ee/Grider2

March 7, 1961 N. C. PRICE 2,973,921

WINGLESS SUPERSONIC AIRCRAFT

Filed March 24, 1958 5 Sheets-Sheet 2

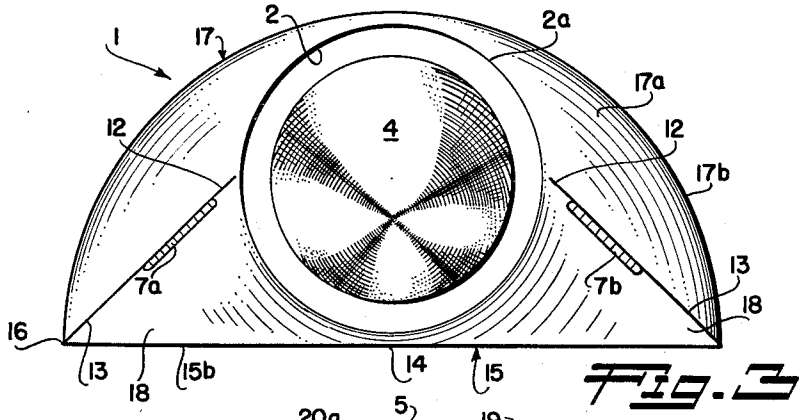

Fig. 3

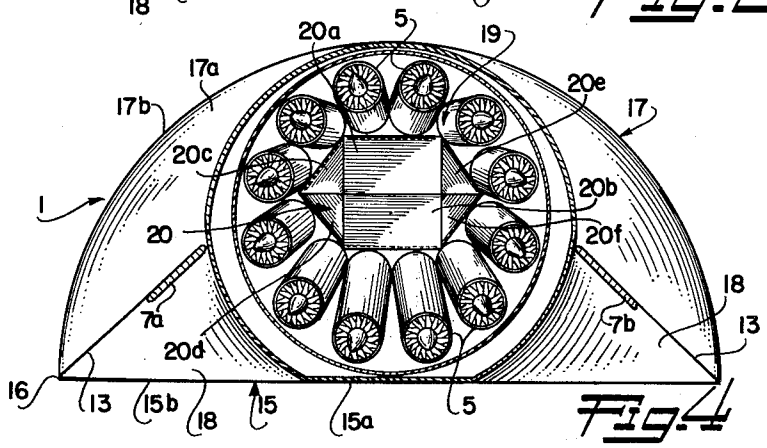

Fig. 4

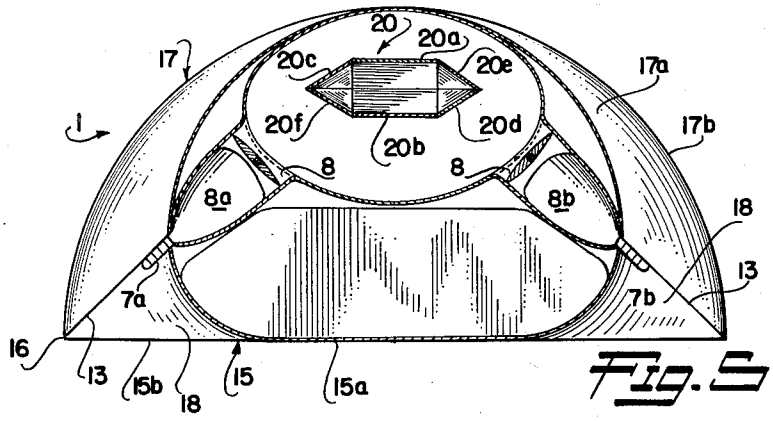

Fig. 5

INVENTOR.
NATHAN C. PRICE

BY

George C. Sullivan
Agent

2 || @HighEarthOrbit_ linktr.ee/Grider2

March 7, 1961 N. C. PRICE 2,973,921

WINGLESS SUPERSONIC AIRCRAFT

Filed March 24, 1958 5 Sheets-Sheet 3

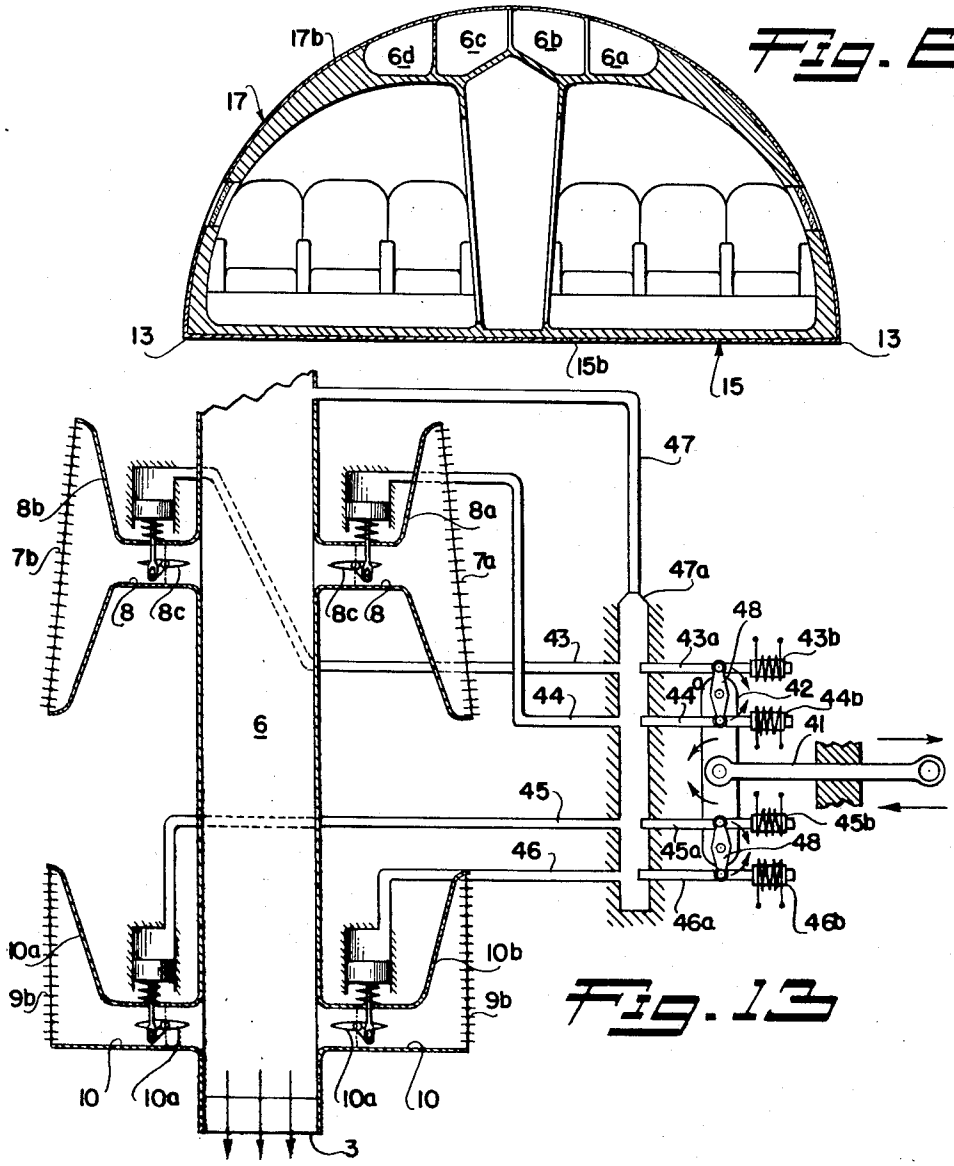

INVENTOR.
NATHAN C. PRICE
BY
George Sullivan
Agent

3 || @HighEarthOrbit_ linktr.ee/Grider2

March 7, 1961 N. C. PRICE 2,973,921

WINGLESS SUPERSONIC AIRCRAFT

Filed March 24, 1958 5 Sheets-Sheet 4

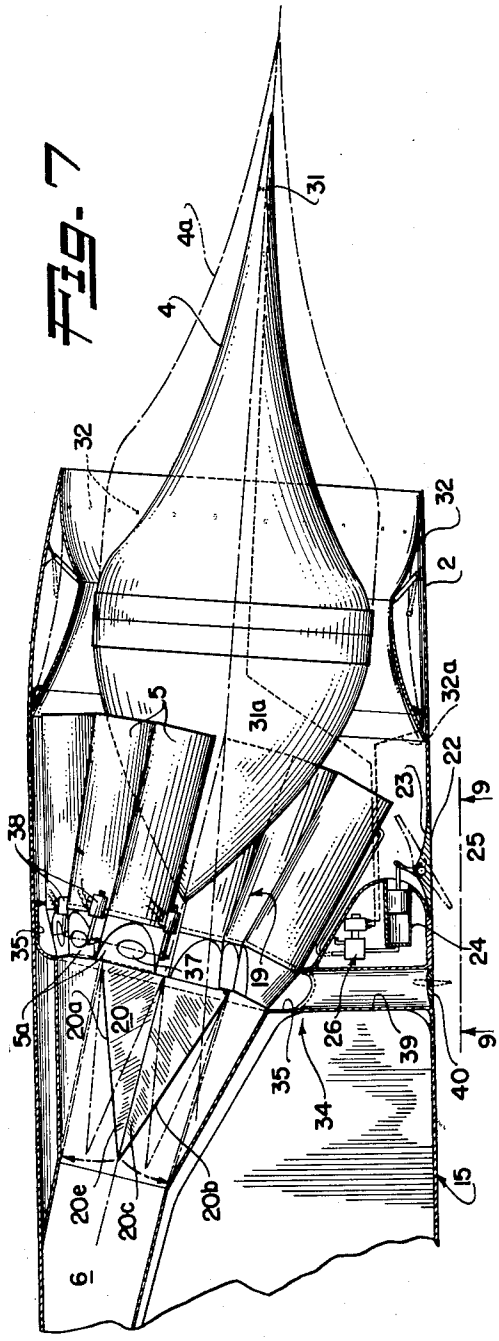

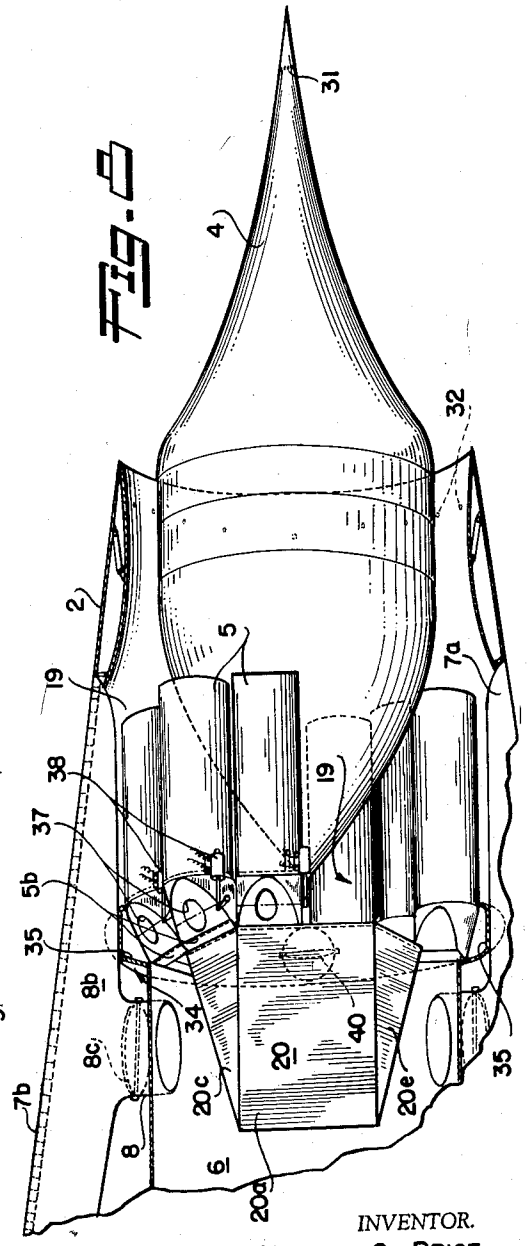

INVENTOR.
NATHAN C. PRICE

BY

George C. Sullivan
Agent

4 || @HighEarthOrbit_ linktr.ee/Grider2

March 7, 1961 N. C. PRICE 2,973,921

WINGLESS SUPERSONIC AIRCRAFT

Filed March 24, 1958 5 Sheets-Sheet 5

Fig. 10

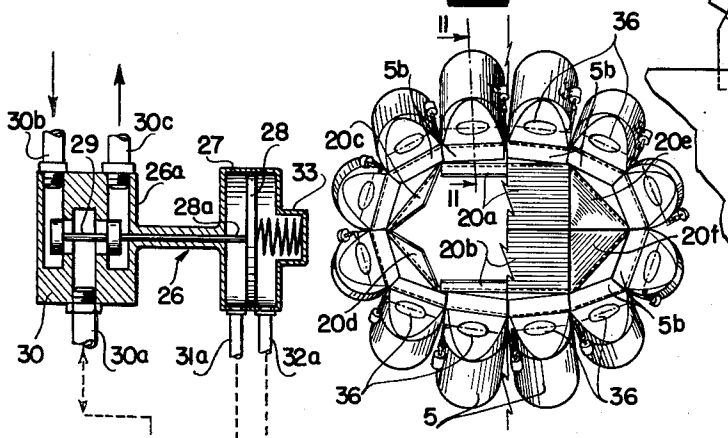

Fig. 11

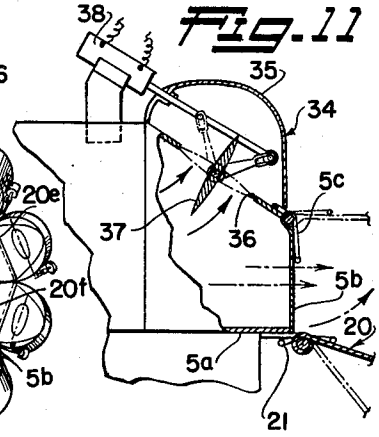

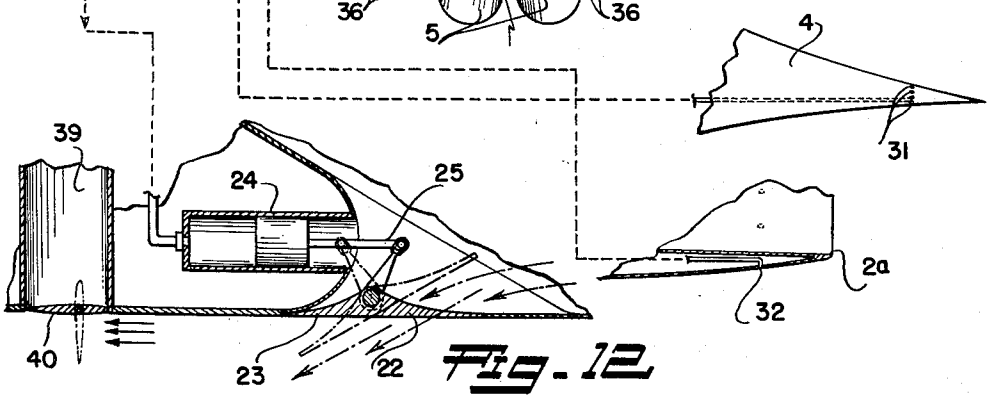

Fig. 12

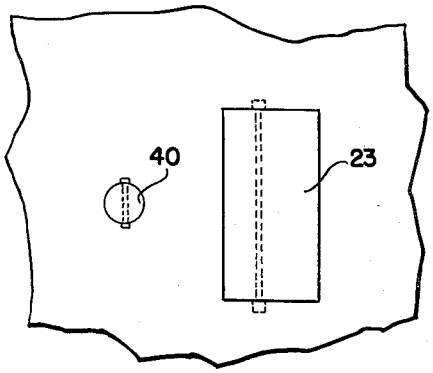

Fig. 9

INVENTOR.
NATHAN C. PRICE
BY
George C. Sullivan
Agent

5 || @HighEarthOrbit_ linktr.ee/Grider2

United States Patent Office

2,973,921

Patented Mar. 7, 1961

1

2,973,921

WINGLESS SUPERSONIC AIRCRAFT

Nathan C. Price, Geneva, Switzerland
(424¼ Kelton Ave., Westwood, Calif.)

Filed Mar. 24, 1958, Ser. No. 723,434

25 Claims. (Cl. 244—12)

This invention relates to a supersonic wingless aircraft, and relates more particularly to improvements in a supersonic wingless aircraft capable of vertical, or substantially vertical ascent or descent during takeoff and landing with efficient performance at low, intermediate and high altitude flights at subsonic or supersonic speeds combined with being economically advantageous for short, medium and long ranges.

The basic aircraft on which this invention is an improvement is covered by my copending application Serial Number 677,877, filed August 13, 1957. The main differences between this invention and my copending application resides in a more aerodynamically efficient fuselage shape in conjunction with a more positive, effective and efficient control of air in the propulsive system; the more aerodynamically efficient fuselage permitting a relocation of the jet efflux openings producing vertical lift and descent during VTOL operations and aircraft directional control, such relocation additionally resulting in reduction of the operational noise level of the aircraft.

Accordingly, it is an object of this invention to provide aircraft of the type described having a more aerodynamically efficient fuselage.

A further object of this invention is to provide aircraft of the type described with a fuselage having a higher L/D ratio at all flight speeds.

It is a further object of this invention to provide aircraft of the type described having a high utilization of volumetric capacity in a fuselage having an inherently high L/D ratio.

A still further object of this invention is to provide aircraft of the type described having a fuselage permitting shorter landing gear, a lower position of loading doors relative to the ground level, a lower aircraft center of gravity relative to the ground level, and a wider landing gear tread (the last two factors minimizing the danger or chances of rolling over in an emergency landing or while taxiing on the ground) without jeopardizing or reducing the fuselage L/D ratio at any flight speed.

A further object of the invention is to provide a more effective means of re-starting turbojets during flight, or of starting a turbojet when less than all the turbojets are operating.

Another object of this invention is to provide an aircraft of the type described having a more positive, effective and efficient propulsion system air control.

It is a still further object of this invention to provide an aircraft of the type described having a reduced operational noise level.

It is another object of this invention to provide an aircraft with an exceptionally high ratio of useful load to gross weight for economical operation at a wide diversity of short, medium, and long stage distances.

Other objects and advantages will become apparent from the following description taken in connection with the accompanying drawings in which:

Figure 1 is an elevation view of partial cross-section of an aircraft showing one embodiment of this invention;

Figure 2 is a plan view of partial cross-section of the aircraft shown in Figure 1;

Figure 3 is a view taken along line 3—3 of Figure 1;

Figure 4 is a view taken along line 4—4 of Figure 2;

Figure 5 is a view taken along line 5—5 of Figure 2;

Figure 6 is a view taken along line 6—6 of Figure 1;

Figure 7 is an enlarged elevation view of partial cross-section of the forward portion of the aircraft shown in Figure 1, showing the ram inlet and powerplants in greater details;

Figure 8 is a plan view of partial cross-section of the portion of the aircraft shown in Figure 7;

Figure 9 is a view taken along line 9—9 of Figure 7;

Figure 10 shows the engine cluster and ram air passage from a downstream point looking forward, which is opposite of the engine cluster and ram air passage view in Figure 4;

Figure 11 is a view taken along line 11—11 of Figure 10;

Figure 12 is a diagrammatic view of the control system for the ram air spill gate; and

Figure 13 is a diagrammatic of the aircraft directional and vertical lift control system.

Generally stated, the invention is practiced in one embodiment by employing a fuselage that is substantially conical shaped at the forward end for a short length where the conical shape is transformed into a shape composed of two surfaces. The upper surface forms a semi-circular shape of increasing radius to a mid-length point of the fuselage, after which the semi-circular radius is substantially constant. The lower surface forms a flat triangle bounded laterally by slightly conical surfaces of decreasing radii in a rearward direction from the forward point or apex of the flat triangular surface to the point mid-length of the fuselage. The intersection of the upper and lower surfaces forms a chine-line on both sides of the fuselage extending from the sides of the inlet to the mid-length fuselage point. Angulated regions are formed by the chines, beneath which lateral extending, downward facing, vertical lift efflux nozzles or slots are placed without destroying the smooth external aircraft contour and forming spill-breakers to increase the inherent fuselage L/D ratio at all flight speeds. The aft end of the semi-circular or hemispherical transverse fuselage shape fairs into a rectangular assembly comprising a bi-lateral main propulsive nozzle for producing pitch, roll and yaw moments in the aircraft fuselage.

The sheet jet efflux from the nozzles or slots beneath the chines has a rapid rate of mixture with the ambient air resulting in relatively low operational noise levels comparative to circular nozzle openings of large diameter. Furthermore, these jet efflux sheets are characterized by noise of relatively high frequency, rather than low frequency, so that the noise attenuates rapidly with distance.

Included in the propulsion system air inlet is a ram air spill gate and a turbojet starting spill gate allowing an efficient disposal of excess ram air which produces lift, and without encountering spill at the air inlet entrance or lip and a less rigorous starting cycle for each of the turbojet powerplants without encountering possible back pressure damages. Spill is avoided to improve the L/D ratio of the airplane. Additional propulsion system fluid control means are included to provide a continuous smooth flow during either the turbojet or ramjet operating ranges.

Referring more particularly to the drawings, in Figure 1 there is shown an aircraft fuselage of some similarity to the basic aircraft shown in my copending application Serial Number 677,877, filed August 13, 1957. The

6 || @HighEarthOrbit_ linktr.ee/Grider2

fuselage 1 has a ram inlet 2 at the forward end thereof and a variable and controllable propulsive nozzle 3 at the aft end thereof. Ram inlet 2 is of the variable geometry type having an axially adjustable needle or spike 4 and a radially adjustable outer duct wall located therein. The position of needle 4 when extended is indicated by phantom lines 4*a* in Figures 1, 2 annd 7. Details of the ram inlet 2 just described form the subject matter of my copending application Serial Number 717,427 filed February 25, 1958.

Located in the diffuser portion of ram inlet 2 are a plurality of turbojet powerplants 5 which discharge combustion gases through turbojet exhaust nozzles 5*a* into a longitudinal duct 6 for passage aft through fuselage 1 to propulsive nozzle 3. Longitudinal duct 6 is preferably composed of a plurality of smaller longitudinal passages 6*a*, 6*b*, 6*c* and 6*d*, as is more clearly shown in Figures 2 and 6, to delimit or prevent swirl or eddies of the fluid flow through longitudinal duct 6, and to structurally contain the pressure of exhaust gases within an oblate cross-sectional area requiring less height than a purely circular one.

For vertical takeoff and vertical ascent and descent operation, there are forward and aft, downward-facing, elongated efflux nozzles along the chines of the fuselage. The right and left forward elongated efflux nozzles 7*a* and 7*b* respectively, are in communication with longitudinal duct 6 through lateral passages 8 and forward right and left chambers 8*a* and 8*b* respectively. The forward lateral passages 8 contain valves 8*c* for control of the reactive fluid to the forward elongated efflux nozzles 7 for vertical ascent or descent control.

The right and left rearward or aft elongated efflux nozzles 9*a* and 9*b* respectively are supplied with propulsive fluid from longitudinal duct 6 by rearward or aft lateral passages 10, which are controlled by valves 10*a* for controlling fluid flow from longitudinal duct 6 to right and left rearward or aft chambers 10*b* and 10*c* respectively, similar to the flow to the forward elongated efflux nozzles 7.

During high forward speed operation of the aircraft the turbojet powerplants 5 can be shut down and a ram air flow is maintainable without obstruction through longitudinal duct 6 for ram-jet operation. For such ram-jet operation there is a ram-jet burner means 11 interposed between the aft end of longitudinal duct 6 and propulsive nozzle 3.

Aerodynamically efficient operation of the aircraft is accomplished by the shape of the outer fuselage surface permitting an inherently high *L/D* (lift/drag) ratio at all stages of flight operation. Referring to Figures 1 through 6, the outer surface of fuselage 1 is substantially conical for a short distance from the lip 2*a* of inlet 2 to a point 12 where the chines 13 begin a sharp break in the smooth conical surface of the fuselage. Simultaneously with the beginning of chines 13 at point 12 there is a second point 14 which is the forward point or apex of a flat triangular surface 15*a* extending aft and forming the bottom surface 15 of the aircraft, which is composed of triangular surface 15*a* which extends rearward to a point 16 where the lower triangular fuselage surface 15*a* and chines 13 join at the lowermost horizontal plane of the fuselage 1. At point 16, the bottom triangular surface 15*a* also joins the bottom flat rectangular surface 15*b* of constant width as indicated in Figure 2, surface 15*b* extending in an aftward direction from point 16.

From point 12, the upper fuselage surface 17 extends rearward to point 16 as a cross-sectional hemispherical surface of increasing diameter or a semi-circular shape of increasing radius 17*a*, which changes to a semi-circular shape of constant radius 17*b* extending aft of point 16. Between forward points 12, 14 and mid-length fuselage point 16, the flat triangular surface 15*a* is bounded laterally by slightly conical surfaces 18, which are of decreasing radii in a rearward direction, surfaces 18 serving as a smooth lateral fillet between bottom triangular surface 15*a* and chines 13, the chines 13 serving as the point of intersection between the upper fuselage surface 17 and lower fuselage surface 15.

Thus, with the horizontal flat lower surface of the fuselage a shorter length landing gear can be utilized, in addition to the accomplishment of a lower relative position of loading doors to the ground level. Furthermore, a lower aircraft center of gravity relative to the ground level and use of a wider landing gear tread can be accomplished, which are both desirable and feasible from a safety aspect, without jeopardizing or reducing the inherent high *L/D* ratio in the fuselage or the high utilization of volumetric capacity of the fuselage as can be seen in Figure 6. The chines are instrumental per se in suppression of air spill upwardly from beneath the fuselage during flight.

The cluster of turbojet powerplants 5 are disposed adjacent the back portion of needle or spike 4 so as to create an envelope for forming a ram air bypass passage 19 between the outer surface of needle 4 and ring of turbojet powerplants 5. Communication between ram air bypass 19 and longitudinal duct 6 is effected by a petal valve 20 comprising two rectangular members 20*a* and 20*b*, and four triangular members 20*c*, 20*d*, 20*e* and 20*f*, all of which are pivotally connected substantially coplanar with the ends of the turbojet exhaust nozzles 5*a*. The inter-relation of the six members of petal valve 20 can be most clearly seen in Figure 5. The phantom lines for petal valve 20 as shown in Figures 1, 2 and 7 indicate the positions of the individual valve members when the petal valve 20 is open. Figure 10 shows the members of petal valve 20 from a view downstream of the valve looking forward; the valve members on the right hand side of Figure 10 being shown in the open position. Each of the members of petal valve 20 are biased toward a closed position, such as by a coil spring 21, as can be most clearly seen in Figure 11, although actually any satisfactory biasing means may be used.

At the downstream end of each turbo-jet exhaust nozzle 5*a* there is a swing type check valve 5*b* which is pivoted at its radially outer end to the turbo-jet exhaust nozzle 5*a*. Each of the turbo-jet swing check valves 5*b* is slightly biased toward a closed position by a coil spring 5*c* similar to the coil or bias spring 21 for biasing the members petal valve 20 shut. The biasing means 5*c* for the check valve 5*b* and the similar means 21 for the petal valve 20 are very low in force so that only negligible pressure of gases is required to open these valves.

During operation of the turbo-jet powerplants 5, the ram air bypass passage 19 is closed by petal valve 20, petal valve 20 remaining closed by the pressure of the turbo-jet powerplant combustion gases reacting on the outer or downstream surfaces of the members of petal valve 20.

During ram-jet operation when the turbo-jet powerplants 5 are shut down, the ram air from inlet 2 passes into longitudinal duct 6 through the ram air bypass passage 19 and petal valve 20. The swing check valves 5*b* on the turbo-jet exhaust nozzles 5*a* are maintained in a closed position by the pressure of the ram air downstream of the petal valve 20 reacting upon the downstream side of the swing check valves 5*b*. The spring bias means on each of the swing check valves 5*b* or members of petal valve 20 assist initially in urging the individual valve members toward a closed position so that the appropriate fluid pressures can come into play to close and maintain closed the individual valve members.

Referring to Figures 7 and 12, there is a ram air spill gate means 22 located in the lower portion of the fuselage surface at a point slightly behind the forward end of the cluster of turbo-jet powerplants 5. The ram air spill gate means 22 comprises a rectangular pivoted valve member 23 that is slightly unbalanced so that the air pressure within the ram inlet diffuser will tend to keep

7 || @HighEarthOrbit_ linktr.ee/Grider2

the valve closed. Pivoted valve member **23** is controlled by a pneumatic servo cylinder **24** connected to the valve member **23** by linkage **25** (see Figure 12). Control of pneumatic servo cylinder **24** is accomplished through an air relay servo control means **26**, the schematic details of which are shown in Figure 12. Control means **26** includes a casing **26***a* having a cylinder **27** adjacent one end thereof with a piston **28** therein. Extending from one side of the piston **28** is a rod or shaft **28***a* which in turn is connected to two-land servo-valve piston **29** whereby axial movement of piston **28** in cylinder **27** is translated to servo-valve piston **29** for controlling the entrance or exhaust of fluid pressure into pneumatic servo cylinder **24**. The air relay means **30** comprises conduit passages **30***a*, **30***b* and **30***c*; passage **30***a* connects the interior of air relay **30** with the interior of pneumatic servo-cylinder **24**, with passage **30***b* connected to any suitable source of fluid pressure, such as the subsonic diffuser section of the inlet, and passage **30***c* being connected to an atmospheric vent or exhaust. Position of the servo-valve piston **29** in the air relay **30** is controlled by the static pressure differential between a first set of pressure taps **31** located in a piezometer ring at the forward portion of the needle or spike **4** and a second set of pressure taps **32** located in a piezometer ring on the outer fuselage surface just downstream from inlet lip **2***a* and upstream from fuselage points **12** and **14**. Other locations of pressure taps **31** and **32** may be utilized, the only requirement being that pressure taps **31** are located so as to be responsive to substantially ambient pressure, while pressure taps **32** are located so as to be responsive to pressure variations occurring due to ram air spill over inlet lip **2***a*. Pressure taps **31** transmit the static pressure signal from pressure taps **32**. As soon as a condition of ram air spill over the inlet lip **2***a* occurs, the static pressure signal from pressure taps **32** will be greatly reduced, thus the static pressure signal level in conduit **31***a* will force piston **28** to overcome the bias of spring **33** and move forward, opening the pneumatic servo cylinder **24** to the atmospheric vent line **30***c* through air relay means **30**. When this occurs the ram air pressure in the inlet diffuser will react upon the forward surface of the piston in pneumatic servo cylinder **24** causing the pivoted valve member **23** to open and thus permit the ram air spilling over the inlet lip **2***a* to pass through the open ram air spill gate means **22**. When the static pressure signal levels from pressure taps **31** and **32** substantially balance out from the reduction of ram air spilling over inlet lip **2***a*, the spring **33** forces piston **28** in an opposite direction thus opening the closed side of the pneumatic servo-cylinder to the inlet diffuser pressure through conduit **30***b*, air relay means **30** and conduit **30***a* thus balancing the pressures on both sides of the piston in the pneumatic servo-cylinder **24**. With such pressures balanced, the unbalanced pressure on the pivoted valve member **23** will cause the valve member to close thus stopping the spill of ram air through the ram air spill gate means **22**. The control results in a condition of equilibrium with sufficient spillage through valve member **23** to prevent any substantial spill around the outside of inlet lip **2***a*, regardless of flight speed or altitude, and can compensate for stoppage of at least one powerplant should this occur during climb. The diagrammatic showing of control of the ram air spill gate means **22** as shown in Figure 12 is merely one embodiment thereof, it being understood that any appropriate control means capable of achieving the control effect of a ram air spill gate means can be used.

In order to accomplish the starting of a turbo-jet powerplant **5** at a time when less than all of the turbo-jet powerplants **5** are operating, a turbo-jet starting spill gate means **34** is incorporated by means of an annular connector ring **35** connected to a valved passage **36** in each of the turbo-jet exhaust nozzles **5***a* and controlled by a butterfly valve **37**. Each butterfly valve **37** is actuated by an electric solenoid **38**. The annular connector ring **35** communicates with an exhaust passage **39** that opens to the atmosphere at the lower portion of the fuselage just aft of the ram air spill gate **23**. An unbalanced butterfly valve **40** controls communication between the exhaust passage **39** and the atmosphere exterior of the fuselage.

If some of the turbo-jet powerplants **5** are in operation and an additional turbo-jet powerplant **5** is to be brought into operation, the swing check valve **5***b* at the downstream end of the turbo-jet exhaust nozzle **5***a* is maintained closed by the pressure from the already operating turbo-jet powerplants reacting on the downstream side of the swing check valve **5***b*. The powerplant **5** to be brought into operation can be started by the pilot activating the appropriate electric solenoid **38** to open the valved passage **36** in the turbo-jet exhaust nozzle **5***a* to allow communication between the powerplant and the annular connector ring **35** venting the turbo-jet discharge to substantially atmospheric pressure. As the powerplant being brought into operation by rammed air pressure or other appropriate means comes up to sufficient speed so that the swing check valve **5***b* can be opened by exhaust gas pressure, the discharge from the engine will pass through the annular connector ring **35** into exhaust passage **39** and through the unbalanced butterfly valve **40**, the discharge pressure through exhaust passage **39** forcing the valve **40** open, and thus venting the exhaust from the engine being started to the atmosphere. Without such a spill means, the swing check valve **5***b* would be held closed by the engines already in operation and there would be an excessive back pressure on the turbo-jet powerplant **5** that is being attempted to be started. Without the swing check valves **5***b*, there would be wasteful reverse flow and also possibility of damage occurring to the non-operating turbo-jet powerplants **5** when only a portion of them are in operation. With the turbo-jet starting spill gate means **34**, as soon as the engine being brought into operation attains a substantial speed, the valve **37** can be closed by reactivation of solenoid **38** so as to cause the discharge of the turbo-jet powerplant **5** being brought into operation to open the appropriate swing check valve **5***b*, and thus the exhaust from that engine will join or combine with the exhaust from the already operating turbo-jet powerplants **5** and add to the fluid flow in longitudinal duct **6**.

Referring now to Figure 13, there is diagrammatically shown a control system for controlling the fluid flow from longitudinal duct **6** to the forward and rearward elongated efflux nozzles **7** and **9**. For vertical ascent, movement of a control rod **41** towards the right will cause control lever arm **42** to lift the plugs **43***a*, **44***a*, **45***a* and **46***a* permitting a flow of fluid pressure from longitudinal duct **6** to flow into passages **43**, **44**, **45** and **46** through main control passage **47**, control passages **43** and **44** controlling the valves **8***c* in the right and left forward lateral passages **8***a* and **8***b*, while control passages **45** and **46** serve to actuate valves **10***a* in the aft or rearward lateral passages **10**. By opening valves **8***c* and **10***a*, fluid from longitudinal duct **6** is in free communication to forward and aft chambers, **8***a*, **8***b*, **10***b* and **10***c*, with the fluid passing through the forward and rearward elongated efflux nozzles **7** and **9**, which are located on the chines **13**, the gases causing a reactive force upward upon exhaust through the elongated efflux nozzles. Both the forward and rearward elongated efflux nozzles **7** and **9** may be controllable so as to give a true upward reaction or a forward or rearward directed reaction, the latter two resulting in a propulsive force or braking force respectively.

Although propulsive nozzle **3** is the same as used in my copending application Serial Number 677,877 filed August 13, 1957, in that it comprises three pairs of horizontal vanes mounted pivotally on horizontal axes with each set of three vanes being separately and individually tiltable for pitch, roll and bank, a high degree of control is able to be achieved by the appropriate use of elongated

8 || @HighEarthOrbit_ linktr.ee/Grider2

efflux nozzles 7 and 9. Maximum vertical lift can be achieved by drawing control rod 41 to the right which pulls control lever arm 42 to the right removing the plugs 43*a*, 44*a*, 45*a* and 46*a* from the control passages 43, 44, 45 and 46, permitting fluid pressure in longitudinal duct 6 to pass through main control passage 47, main control manifold 47*a* and control passages 43, 44, 45 and 46 to the pistons controlling lateral passage valves 8*c* and 10*a* for opening passages 8 and 10 allowing the propulsive fluids to flow into chambers 8*a*, 8*b*, 10*b* and 10*c* for discharge from elongated efflux nozzles 7 and 9. It is to be noted that efflux nozzles 7 and 9 contain controllable valves of any of the variety of embodiments shown in my copending application Serial Number 677,877 identified above.

For the differentiable control aspect, each of the pairs of control passage plugs are mounted on control lever arm 42 by a rocker arm 48, the forward control passage plugs 43*a* and 44*a* being mounted on one rocker arm 48 and the rearward control passage plugs 45*a* and 46*a* being mounted on a second rocker arm 48. Each of the control passage plugs has a solenoid means associated therewith for individual actuation of one control passage plug relative to the other one of its pair, or to allow control of a pair of control passage plugs relative to the other pair. For an example, assuming that a bank to the right is to be made by the aircraft, control rod 41 will be pulled toward the right slightly so as to attempt to uncover all of the control passages 43, 44, 45 and 46. Concurrently, solenoids 43*b* and 45*b* will be activated causing control passage plugs 43*a* and 45*a* to be further removed from control passages 43 and 45, while control passage plugs 44*a* and 46*a* are seated on control passages 44 and 46 preventing fluid flow from the main control manifold 47*a* entering the control passages 44 and 46. Therefore the elongated efflux nozzles 7*b* and 9*b* on the left side of the aircraft will be supplied with fluid pressure from longitudinal duct 6 for a reactive discharge therethrough causing the left side of the aircraft to rise relative to the right side of the aircraft causing a bank to the right.

Pitch control is accomplished in the same manner by pulling control rod 41 slightly to the right and activating a pair of the solenoids together; that is activation of solenoids 43*b* and 44*b* to point the nose of the aircraft up and actuation of solenoids 45*b* and 46*b* to point the nose of the aircraft down. During flight such control variations can be scheduled into the individual elements through an electronic flight control system or programmer.

In operation when the aircraft is ready to take off the individual turbo-jet powerplants 5 can be started, each being started individually and having its combustion products discharge through turbo-jet starting spill gate means 34 until it attains the speed of the already running powerplants. The ram air bypass passage 19 is closed by means of petal valve 20 while each of the swing check valves 5*b* on the exhaust nozzles 5*a* of the non-operative turbo-jet powerplants 5 are maintained closed. For vertical lift or vertical takeoff the control rod 41 is moved slightly to the right so as to uncover control passages 43, 44, 45 and 46 resulting in the elongated efflux nozzles 7 and 9 to be supplied with a fluid flow for discharge therethrough resulting in an upward reactive force. When sufficient altitude is reached the controllable valves in the elongated efflux nozzles can be adjusted so as to impart a rearward exhaust direction giving a forward translational velocity to the aircraft, and upon the gradual reduction of fluid pressure flow through the lateral passages the fluid in longitudinal duct 6 will then pass through the rear propulsive nozzle 3. During operation should a condition of ram air spill over the inlet lip 2*a* tend to occur, by ram air spill gate means 22 a pivoted valve member 23 is progressively opened allowing spill air to pass out therethrough in correct amount reducing the spill of ram air over the inlet lip 2*a* to an insignificant value.

In view of the fuselage shape having an inherent high *L/D* ratio at all flight speeds and attitudes, a most efficient use of propulsion is accomplished whether through the elongated efflux nozzles 7 and 9 or the propulsive nozzle 3, or a combination thereof. The elongated efflux through nozzles beneath the chines developes as a sheet which rapidly mixes with the ambient air, hence, the noise level will be comparatively low compared to large circular nozzle openings. It is also to be noted that the *L/D* ratio of the airplane will be benefited by the jet sheets beneath the chines by reducing spill along the flanks of the fuselage. As soon as the aircraft is at altitude and ready to cruise, the turbo-jet powerplants 5 can be shut down and cruising propulsion is attained by ram-jet power through the use of ram-jet burner means 11 at the end of longitudinal duct 6. By having the ram-jet burner means 11 at the aft end of longitudinal duct 6, the walls of the longitudinal duct 6 are not subject to the high heat of ram-jet combustion gases that would occur if the burner means 11 were at a point forward of its location.

Having described only a typical form of the invention I do not wish to be limited to the specific details herein set forth, but wish to reserve to myself any variations or modifications that may appear to those skilled in the art and fall within the scope of the following claims.

What is claimed is:

1. In an aircraft having a ram inlet and a spike therein, a ram air spill gate means comprising a valve controlled passage from the inlet interior to the atmosphere, a valve in said passage, pneumatic relay servo means controlling said valve, first pressure sensitive means responsive to substantially ambient pressure, and second pressure sensitive means responsive to pressure variations occurring due to ram air spill over the ram inlet lip, said pneumatic relay servo valve controlling means connected to the first and second pressure sensitive means whereby the valve is opened by a condition of ram air spill over the inlet lip indicated by a reduction of pressure level sensed by the second pressure sensitive means relative to the pressure level sensed by the first pressure sensitive means, said valve allowing passage of ram air from the inlet interior to the atmosphere directly thereupon reducing ram air spill over the inlet lip.

2. In an aircraft having a ram inlet and a spike therein, a ram air spill gate means comprising a valve controlled passage from the inlet interior to the atmosphere, a valve in said passage, pneumatic relay servo means controlling said valve, first pressure sensitive means in the forward portion of the inlet spike, and second pressure sensitive means on the outer surface of the inlet slightly downstream of the inlet lip, said pneumatic relay servo valve controlling means connected to the first and second pressure sensitive means whereby the valve is opened by a condition of ram air spill over the inlet lip indicated by a reduction of pressure level sensed by the second pressure sensitive means relative to the pressure level sensed by the first pressure sensitive means, said valve allowing passage of ram air from the inlet interior to the atmosphere directly thereupon reducing ram air spill over the inlet lip.

3. In an aircraft having a ram inlet, a plurality of turbo-jet powerplants located adjacent the downstream portion of the inlet, said powerplants arranged so as to provide an envelope for a ram air passage for ram-jet operation, and a valve means at the downstream end of each of the turbo-jet powerplants and the ram air passage whereby when the aircraft is on turbo-jet operation the ram air passage valve means is closed, and when the aircraft is on ram-jet operation all of the turbo-jet powerplant valve means are closed.

4. In an aircraft having a ram inlet, a plurality of

9 | | @HighEarthOrbit_ linktr.ee/Grider2

turbo-jet powerplants located adjacent the downstream portion of the inlet, said powerplants arranged so as to provide an envelope for a ram air passage for ram-jet operation, a valve means at the downstream end of each of the turbo-jet powerplants and the ram air passage whereby when the aircraft is on turbo-jet operation the ram air passage valve means is closed and when the aircraft is on ram-jet operation all of the turbo-jet powerplant valve means are closed, and each of said valve means including a means for biasing said valve means to a closed position.

5. In an aircraft having a ram inlet, a plurality of turbo-jet powerplants located adjacent the downstream portion of the inlet, said powerplants arranged so as to provide an envelope for a ram air passage for ram-jet operation, and a valve means at the downstream end of each of the turbo-jet powerplants and the ram air passage whereby when the aircraft is on turbo-jet operation the ram air passage valve means is maintained closed by pressure generated by the turbo-jet powerplant reacting on the downstream side thereof and when the aircraft is on ram-jet operation all of the turbo-jet powerplant valve means are maintained closed by pressure generated by air passing through the ram air passage reacting on the downstream sides thereof.

6. In an aircraft having a ram inlet, a plurality of turbo-jet powerplants located adjacent the downstream portion of the inlet, said powerplants arranged so as to provide an envelope for a ram air passage for ram-jet operation, a first valve means at the downstream end of each of the turbo-jet powerplants, said first valve means of the substantially rectangular swing check type pivotally connected to one side of the downstream end of each turbo-jet powerplant, and a second valve means at the downstream end of the ram air passage, said first and second valve means adapted whereby when the aircraft is on turbo-jet operation the ram air passage valve means is closed and when the aircraft is on ram-jet operation all of the turbo-jet powerplant swing check valves are closed.

7. In an aircraft having a ram inlet, a plurality of turbo-jet powerplants located adjacent the downstream portion of the inlet, said powerplants arranged so as to provide an envelope for a ram air passage for ram-jet operation, a first valve means at the downstream end of each of the turbo-jet powerplants, and a second valve means of the iris type pivotally connected circumferentially around the ram air passage at the downstream end thereof, said first and second valve means adapted whereby when the aircraft is on turbo-jet operation the ram air passage iris valve is closed, and when the aircraft is on ram-jet operation all of the turbo-jet powerplant valve means are closed.

8. In an aircraft having a ram inlet with a plurality of turbo-jet powerplants located at the downstream portion of the inlet, a first valve means at the downstream end of each of the turbo-jet powerplants, and an engine starting spill gate means comprising a duct communicating each of the turbo-jet powerplants from a connection upstream of the downstream end first valve means to the atmosphere, and a second valve means at each connection of the duct to a turbo-jet powerplant whereby when less than all of the turbo-jet powerplants are operating and the first valve means on each shut down turbo-jet powerplant is closed, a shut down turbo-jet powerplant can be started by opening its second valve means to allow the starting exhaust from that powerplant to pass through the duct to the atmosphere for ease of starting without adverse effects of back pressure caused by already running turbo-jet powerplants.

9. In an aircraft having a ram inlet with a plurality of turbo-jet powerplants located in the downstream portion of the inlet, a first valve means at the downstream end of each of the turbo-jet powerplants, and an engine starting spill gate means comprising an annular manifold duct, said duct connected to each of the turbo-jet powerplants upstream of the downstream end first valve means, second valve means at each connection of the duct to a turbo-jet powerplant, and means venting the duct to the atmosphere, said engine starting spill gate means arranged whereby when less than all of the turbo-jet powerplants are operating and the first valve means on each shut down turbo-jet powerplant is closed, a shut down turbo-jet powerplant can be started by opening its second valve means to allow the starting exhaust from that powerplant to pass through the duct to the atmosphere for ease of starting without adverse effects of back pressure caused by already running turbo-jet powerplants.

10. A device as claimed in claim 7 wherein the first valve means is a substantially rectangular swing check valve pivotally connected to one side of the downstream end of each turbo-jet powerplant.

11. A device as claimed in claim 7 wherein the second valve means is a positive operated butterfly valve.

12. An aircraft fuselage having an inherent high L/D ratio at all flight speeds formed by a substantially conical surface of revolution at the forward end for a short length to a first fuselage point, the outer fuselage surface transforming to a first and second surface at the first fuselage point, the first surface extending from the first fuselage point to a second fuselage point mid-length of the fuselage as a semi-circular shape of increasing radius, the first surface extending aft from the second fuselage point with the semi-circular radius constant, and the second surface extending from the first fuselage point to the second fuselage point as a flat triangle bounded laterally by slightly conical surfaces of decreasing radii in a rearward direction, the second surface extending aft of the second fuselage point as a flat surface of constant width.

13. An aircraft fuselage having an inherent high L/D ratio at all flight speeds with a ram inlet at the forward end and a propulsive nozzle at the aft end formed by a substantially conical surface of revolution at the forward end for a short length to a first fuselage point, the outer fuselage surface transforming to a first and second surface at the first fuselage point, the first surface extending from the first fuselage point to a second fuselage point mid-length of the fuselage as a semi-circular shape of increasing radius, the first surface extending aft to the propulsive nozzle from the second fuselage point with the semi-circular radius constant, the second surface extending from the first fuselage point to the second fuselage point as a flat triangle bounded laterally by slightly conical surfaces of decreasing radii in a rearward direction, the second surface extending aft to the propulsive nozzle from the second fuselage point as a flat surface of constant width.

14. An aircraft fuselage having an inherent high L/D ratio at all flight speeds formed by a substantially conical surface of revolution at the forward end for a short length to a first fuselage point, the outer fuselage surface transforming to a first and second surface at the first fuselage point, the first surface extending from the first fuselage point to a second fuselage point mid-length of the fuselage as a semi-circular shape of increasing radius, the first surface extending aft from the second fuselage point with the semi-circular radius constant, the second surface extending from the first fuselage point to the second fuselage point as a flat triangle bounded laterally by slightly conical surfaces of decreasing radii in a rearward direction, the second surface extending aft of the second fuselage point as a flat surface of constant width, a chine on both sides of the fuselage formed by the intersection of the first and second surfaces and extending from the first fuselage point to the aft end of the fuselage, and downward facing and laterally extending vertical lift efflux nozzle openings located beneath the chines whereby a smooth external aircraft surface contour is maintained.

15. In an aircraft the combination of a fuselage having an inherent high L/D ratio at all flight speeds, a ram

10 || @HighEarthOrbit_ linktr.ee/Grider2

inlet at the forward end of said fuselage, the fuselage formed by a substantially conical surface of revolution extending aft from the inlet lip for a short length to a first fuselage point, the outer fuselage surface transforming to a first and second surface at the first fuselage point, the first surface extending from the first fuselage point to a second fuselage point mid-length of the fuselage as a semi-circular shape of increasing radius, the first surface extending aft from the second fuselage point with the semi-circular radius constant, the second surface extending from the first fuselage point to the second fuselage point as a flat triangle bounded laterally by slightly conical surfaces of decreasing radii in a rearward direction, the second surface extending aft of the second fuselage point as a flat surface of constant width, a ram air spill gate means comprising a valve controlled passage from the inlet interior to the atmosphere on the second fuselage surface, a valve in said passage, and means controlling said valve, said valve controlling means being responsive to conditions of ram air spill over the lip of said inlet whereby said valve is opened for passage of ram air to the atmosphere to reduce the spill of ram air over the inlet lip.

16. In an aircraft the combination of a fuselage having an inherent high L/D ratio at all flight speeds, a ram inlet at the forward end of said fuselage, the fuselage formed by a substantially conical surface of revolution extending aft from the inlet lip for a short length to a first fuselage point, the outer fuselage surface transforming to a first and second surface at the first fuselage point, the first surface extending from the first fuselage point to a second fuselage point mid-length of the fuselage as a semi-circular shape of increasing radius, the first surface extending aft from the second fuselage point with the semi-circular radius constant, the second surface extending from the first fuselage point to the second fuselage point as a flat triangle bounded laterally by slightly conical surfaces of decreasing radii in a rearward direction, the second surface extending aft of the second fuselage point as a flat surface of constant width, a plurality of turbojet powerplants located adjacent the downstream portion of the inlet, said powerplants arranged so as to provide an envelope for a ram air passage for ram-jet operation, and the valve means at the downstream end of each of the turbo-jet powerplants and the ram air passage whereby when the aircraft is on turbo-jet operation the ram air passage valve means is closed, and when the aircraft is on ram-jet operation all of the turbo-jet powerplant valve means are closed.

17. In air aircraft the combination of a fuselage having an inherent high L/D ratio at all flight speeds, a ram inlet at the forward end of said fuselage, the fuselage formed by a substantially conical surface of revolution extending aft from the inlet lip for a short length to a first fuselage point, the outer fuselage surface transforming to a first and second surface at the first fuselage point, the first surface extending from the first fuselage point to a second fuselage point mid-length of the fuselage as a semi-circular shape of increasing radius, the first surface extending aft from the second fuselage point with the semi-circular radius constant, the second surface extending from the first fuselage point to the second fuselage point as a flat triangle bounded laterally by slightly conical surfaces of decreasing radii in a rearward direction, the second surface extending aft of the second fuselage point as a flat surface of constant width, a plurality of turbo-jet powerplants located at the downstream portion of the inlet, a first valve means at the downstream end of each of the turbo-jet powerplants, and an engine starting spill gate means comprising a duct communicating each of the turbo-jet powerplants from a connection upstream of the downstream end first valve means to the atmosphere on the second fuselage surface, and a second valve means at each connection of the duct to a turbo-jet powerplant whereby when less than all of the turbo-jet powerplants are operating and the first valve means on each shut down turbo-jet powerplant is closed, a shut down turbo-jet powerplant can be started by opening its second valve means to allow the starting exhaust from that powerplant to pass through the duct to the atmosphere for ease of starting without adverse effects of back-pressure caused by already running turbo-jet powerplants.

18. In an aircraft having a ram inlet, a plurality of turbo-jet powerplants located adjacent the downstream portion of the inlet, said powerplants arranged so as to provide an envelope for a ram air passage for ram-jet operation, and a valve means at the downstream end of each of the turbo-jet powerplants and the ram air passage whereby when the aircraft is on turbo-jet operation the ram air passage valve means is closed, and when the aircraft is on ram-jet operation all of the turbo-jet powerplant valve means are closed, a ram air spill gate means comprising a valve controlled passage from the ram inlet interior to the atmosphere, a valve in said passage, and means controlling said valve, said valve controlling means being responsive to conditions of ram air spill over the lip of said inlet whether the aircraft is on turbo-jet or ram-jet operation whereby said valve is opened for passage of ram air to the atmosphere to reduce the spill of ram air over the inlet lip.

19. In an aircraft having a ram inlet, a plurality of turbo-jet powerplants located at the downstream portion of the inlet, a first valve means at the downstream end of each of the turbo-jet powerplants, an engine starting spill gate means comprising a duct communicating each of the turbo-jet powerplants from a connection upstream of the downstream end first valve means to the atmosphere, a second valve means at each connection of the duct to a turbo-jet powerplant whereby when less than all of the turbo-jet powerplants are operating and the first valve means on each shut down turbo-jet powerplant is closed, a shut down turbo-jet powerplant can be started by opening its second valve means to allow the starting exhaust from that powerplant to pass through the duct to the atmosphere for ease of starting without adverse effects of back-pressure caused by already running turbo-jet powerplants, a ram air spill gate means comprising a valve controlled passage from the inlet interior to the atmosphere, a valve in said passage, and means controlling said valve, said valve controlling means being responsive to conditions of ram air spill over the lip of said inlet whereby said valve is opened for passage of ram air to the atmosphere to reduce the spill of ram air over the inlet lip.

20. In an aircraft having a ram inlet, a plurality of turbo-jet powerplants located adjacent the downstream portion of the inlet, said powerplants arranged so as to provide an envelope for a ram air passage for ram-jet operation, a first valve means at the downstream end of each of the turbo-jet powerplants and the ram air passage whereby when the aircraft is on turbo-jet operation the ram air passage valve means is closed and when the aircraft is on ram-jet operation all of the turbo-jet powerplant valve means are closed, an engine starting spill gate means comprising a duct communicating each of the turbo-jet powerplants from a connection upstream of the downstream end first valve means to the atmosphere, and a second valve means at each connection of the duct to a turbo-jet powerplant whereby when less than all of the turbo-jet powerplants are operating and the first valve means on each turbo-jet powerplant is closed, a shut down turbo-jet powerplant can be started by opening its second valve means to allow the starting exhaust from that powerplant to pass through the duct to the atmosphere for ease of starting without adverse effects of back pressure caused by already running turbo-jet powerplants.

21. In an aircraft the combination of a fuselage having an inherent high L/D ratio at all flight speeds, a ram inlet at the forward end of said fuselage, the fuselage formed by a substantially conical surface of revolution

11 || @HighEarthOrbit_ linktr.ee/Grider2

extending aft from the inlet lip for a short length to a first fuselage point, the outer fuselage surface transforming to a first and second surface at the first fuselage point, the first surface extending from the first fuselage point to a second fuselage point mid-length of the fuselage as a semi-circular shape of increasing radius, the first surface extending aft from the second fuselage point with the semi-circular radius constant, the second surface extending from the first fuselage point to the second fuselage point as a flat triangle bounded laterally by slightly conical surfaces of decreasing radii in a rearward direction, the second surface extending aft of the second fuselage point as a flat surface of constant width, a plurality of turbo-jet powerplants located adjacent the downstream portion of the inlet, said powerplants arranged so as to provide an envelope for a ram air passage for ram-jet operation, valve means at the downstream end of each of the turbo-jet powerplants and the ram air passage whereby when the aircraft is on turbo-jet operation the ram air passage valve means is closed and when the aircraft is on ram-jet operation all of the turbo-jet powerplant valve means are closed, a ram air spill gate means comprising a valve controlled passage from the inlet interior to the atmosphere on the second fuselage surface, a valve in said passage, and means controlling said valve, said valve controlling means being responsive to conditions of ram air spill over the lip of said inlet whether the aircraft is on turbo-jet or ram-jet operation whereby said valve is opened for passage of ram air to the atmosphere to reduce the spill of ram air over the inlet lip.

22. In an aircraft the combination of a fuselage having an inherent high L/D ratio at all flight speeds, a ram inlet at the forward end of said fuselage, the fuselage formed by a substantially conical surface of revolution extending aft from the inlet lip for a short length to a first fuselage point, the outer fuselage surface transforming to a first and second surface at the first fuselage point, the first surface extending from the first fuselage point to a second fuselage point mid-length of the fuselage as a semi-circular shape of increasing radius, the first surface extending aft from the second fuselage point with the semi-circular radius constant, the second surface extending from the first fuselage point to the second fuselage point as a flat triangle bounded laterally by slightly conical surfaces of decreasing radii in a rearward direction, the second surface extending aft of the second fuselage point as a flat surface of constant width, a plurality of turbo-jet powerplants located at the downstream portion of the inlet, a first valve means at the downstream end of each of the turbo-jet powerplants, and an engine starting spill gate means comprising a duct communicating each of the turbo-jet powerplants from a connection upstream of the downstream end first valve means to the atmosphere on the second fuselage surface, a second valve means at each connection of the duct to a turbo-jet powerplant whereby when less than all of the turbo-jet powerplants are operating and the first valve means on each shut down turbo-jet powerplant is closed, a shut down turbo-jet powerplant can be started by opening its second valve means to allow the starting exhaust from that powerplant to pass through the duct to the atmosphere for ease of starting without adverse effects of back pressure caused by already running turbo-jet powerplants, a ram air spill gate means comprising a valve controlled passage from the inlet interior to the atmosphere on the second fuselage surface, a valve in said passage, and means controlling said valve, said valve controlling means being responsive to conditions of ram air spill over the lip of said inlet whereby said valve is opened for passage of ram air to the atmosphere to reduce the spill of ram air over the inlet lip.

23. In an aircraft, the combination of a fuselage having an inherent high L/D ratio at all flight speeds, a ram inlet at the forward end of said fuselage, the fuselage formed by a substantially conical surface of revolution extending aft from the inlet lip for a short length to a first fuselage point, the outer fuselage surface transforming to a first and second surface at the first fuselage point, the first surface extending from the first fuselage point to a second fuselage point mid-length of the fuselage as a semi-circular shape of increasing radius, the first surface extending aft from the second fuselage point with the semi-circular radius constant, the second surface extending aft of the second fuselage point as a flat surface of constant width, a plurality of turbo-jet powerplants located adjacent the downstream portion of the inlet, said powerplants arranged so as to provide an envelope for a ram air passage for ram-jet operation, a first valve means at the downstream end of each of the turbo-jet powerplants and the ram air passage whereby when the aircraft is on turbo-jet operation the ram air passage first valve means is closed, and when the aircraft is on ram-jet operation all of the turbo-jet powerplant first valve means are closed, an engine starting spill gate means comprising a duct communicating with each of the turbo-jet powerplants from a connection upstream of the downstream end first valve means to the atmosphere on the second fuselage surface, and a second valve means at each connection of the duct to a turbo-jet powerplant whereby when less than all the turbo-jet powerplants are operating and the first valve means on each shut down turbo-jet powerplant is closed, a shut down turbo-jet powerplant can be started by opening its second valve means to allow the starting exhaust from that powerplant to pass through the duct to the atmosphere for ease of starting without adverse effects of back pressure caused by already running turbo-jet powerplants.

24. In an aircraft having a ram inlet, a plurality of turbo-jet powerplants located adjacent the downstream portion of the inlet, said powerplants arranged so as to provide an envelope for a ram air passage for ram-jet operation, a first valve means at the downstream end of each of the turbo-jet powerplants and the ram air passage whereby when the aircraft is on turbo-jet operation the ram air passage first valve means is closed, and when the aircraft is on ram-jet operation all of the turbo-jet powerplant first valve means are closed, an engine starting spill gate means comprising a duct communicating each of the turbo-jet powerplants from a connection upstream of the downstream end first valve means to the atmosphere, a second valve means at each connection of the duct to a turbo-jet powerplant whereby when less than all of the turbo-jet powerplants are operating and the first valve means on each shut down turbo-jet powerplant is closed, a shut down turbo-jet powerplant can be started by opening its second valve means to allow the starting exhaust from that powerplant to pass through the duct to the atmosphere for ease of starting without adverse effects of back pressure caused by already running turbo-jet powerplants, a ram air spill gate means comprising a valve controlled passage from the inlet interior to the atmosphere, a valve in said passage, and means controlling said valve, said valve controlling means being responsive to conditions of ram air spill over the lip of said inlet whether the aircraft is on turbo-jet or ram-jet operation whereby said valve is opened for passage of ram air to the atmosphere to reduce the spill of ram air over the inlet lip.

25. In an aircraft the combination of a fuselage having an inherent high L/D ratio at all flight speeds, a ram inlet at the forward end of said fuselage, the fuselage formed by a substantially conical surface of revolution extending aft from the inlet lip for a short length to a first fuselage point, the outer fuselage surface transforming to a first and second surface at the first fuselage point, the first surface extending from the first fuselage point to a second fuselage point mid-length of the fuselage as a semi-circular shape of increasing radius, the first surface extending aft from the second fuselage point with

12 || @HighEarthOrbit_ linktr.ee/Grider2

the semi-circular radius constant, the second surface extending from the first fuselage point to the second fuselage point as a flat triangle bounded laterally by slightly conical surfaces of decreasing radii in a rearward direction, the second surface extending aft of the second fuselage point as a flat surface of constant width, a plurality of turbo-jet powerplants located adjacent the downstream portion of the inlet, said powerplants arranged so as to provide an envelope for a ram air passage for ram-jet operation, a first valve means at the downstream end of each of the turbo-jet powerplants and the ram air passage whereby when the aircraft is on turbo-jet operation the ram air passage first valve means is closed, and when the aircraft is on ram-jet operation all of the turbo-jet powerplant first valve means are closed, an engine starting spill gate means comprising a duct communicating each of the turbo-jet powerplants from a connection upstream of the downstream end first valve means to the atmosphere on the second fuselage surface, a second valve means at each connection of the duct to a turbo-jet powerplant whereby when less than all of the turbo-jet powerplants are operating and the first valve means on on each shut down turbo-jet powerplant is closed, a shut down turbo-jet powerplant can be started by opening its second valve means to allow the starting exhaust from that powerplant to pass through the duct to the atmosphere for ease of starting without adverse effects of back pressure caused by already running turbo-jet powerplants, a ram air spill gate means comprising a valve controlled passage from the inlet interior to the atmosphere on the second fuselage surface, a valve in said passage, and means controlling said valve, said valve controlling means being responsive to conditions of ram air spill over the lip of said inlet whether the aircraft is on turbo-jet or ram-jet operation whereby said valve is opened for passage of ram air to the atmosphere to reduce the spill of ram air over the inlet lip.

References Cited in the file of this patent

UNITED STATES PATENTS

1,328,040	Finley	Jan. 13, 1920
1,684,240	Pigeon	Sept. 11, 1928
2,577,919	Roy	Dec. 11, 1951
2,699,906	Lee	Jan. 18, 1955
2,811,828	McLafferty	Nov. 5, 1957
2,832,192	Budish	Apr. 29, 1958
2,865,580	Marshall	Dec. 23, 1958

13 || @HighEarthOrbit_ linktr.ee/Grider2

United States Patent

Jaeger

[15] **3,640,489**

[45] **Feb. 8, 1972**

[54] **VERTICAL TAKEOFF AND LANDING AIRCRAFT**

[72] Inventor: **Karl Jaeger,** Im Stillen Winkel 21, 43 Essen-Margarethenhohe, Germany

[22] Filed: **July 28, 1969**

[21] Appl. No.: **845,242**

[30] **Foreign Application Priority Data**

July 26, 1968 Germany .....P 17 56 879.5

[52] **U.S. Cl.** .....**244/23 C**

[51] **Int. Cl.** **B64c 29/00**

[58] **Field of Search** 244/12, 23, 3.24; 239/265.35

[56] **References Cited**

UNITED STATES PATENTS

3,238,875	3/1966	Stadler et al.	244/3.24
3,390,899	7/1968	Herbert et al.	239/265.35
3,416,754	12/1968	Pinaire et al.	239/265.35
2,947,496	8/1960	Leggett	244/12
2,990,137	6/1961	Willis	244/12
3,082,977	3/1963	Arlin	244/12
3,162,011	12/1964	Mullins et al.	244/23
3,465,989	9/1969	Bowshier	244/23

Primary Examiner—Trygve M. Blix
Assistant Examiner—Steven W. Weinrich
Attorney—Karl F. Ross

[57] **ABSTRACT**

A vertical takeoff and landing (VTOL) aircraft has a discus-shaped fuselage with a plurality of angularly equispaced lift-generating assemblies. Each assembly comprises a rotor above or flush with the fuselage, a compressor in the fuselage drawing air in from above, and a nozzle below the fuselage for expelling the air from the compressor in a jet. The nozzles can be rotated to point in any direction. Thus, according to the settings of the nozzles, the aircraft can rise or sink vertically and move in any horizontal direction.

7 Claims, 4 Drawing Figures

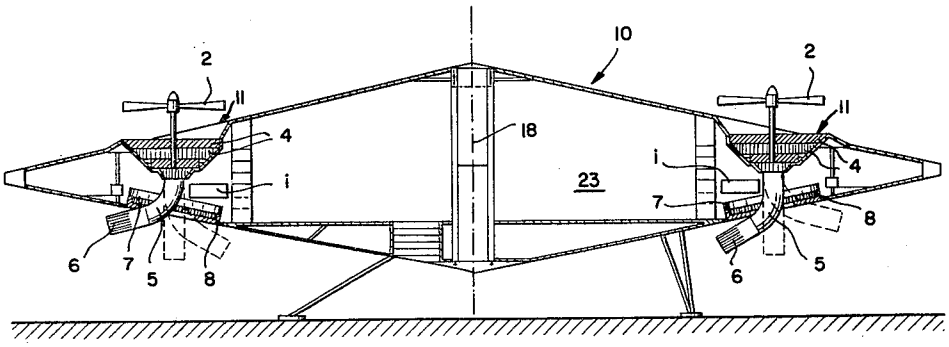

PATENTED FEB 8 1972 3,640,489

SHEET 1 OF 2

FIG. 4

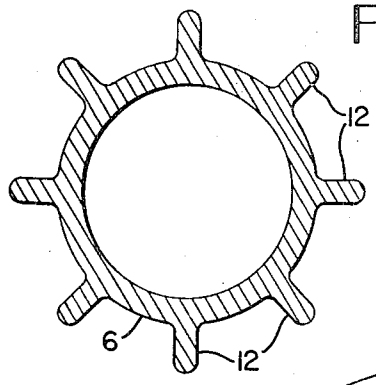

FIG. 1

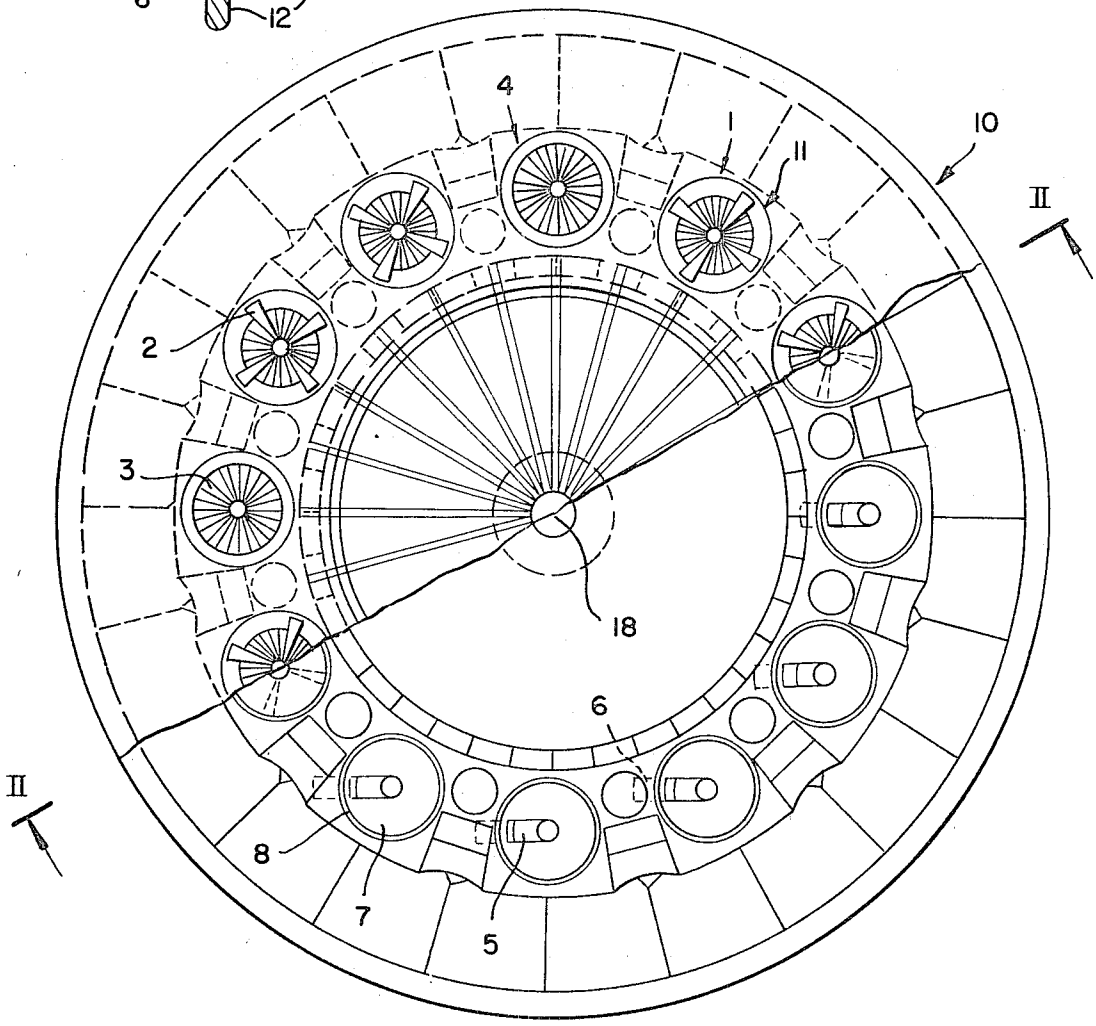

INVENTOR.
KARL JAEGER
BY
Karl F. Ross
ATTORNEY

PATENTED FEB 8 1972 3,640,489

SHEET 2 OF 2

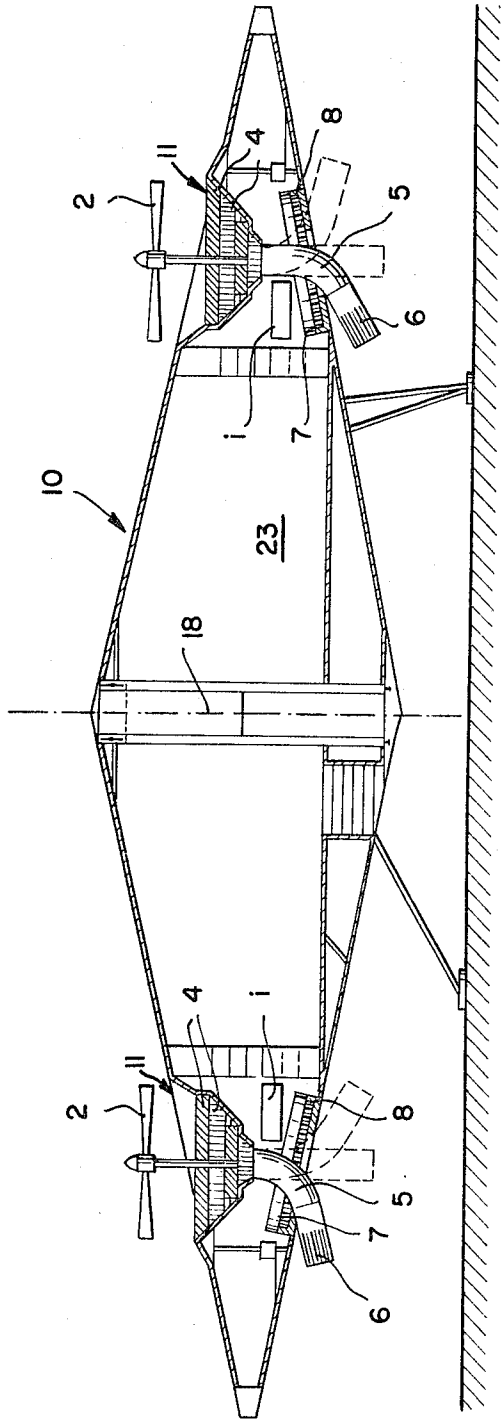

FIG. 2

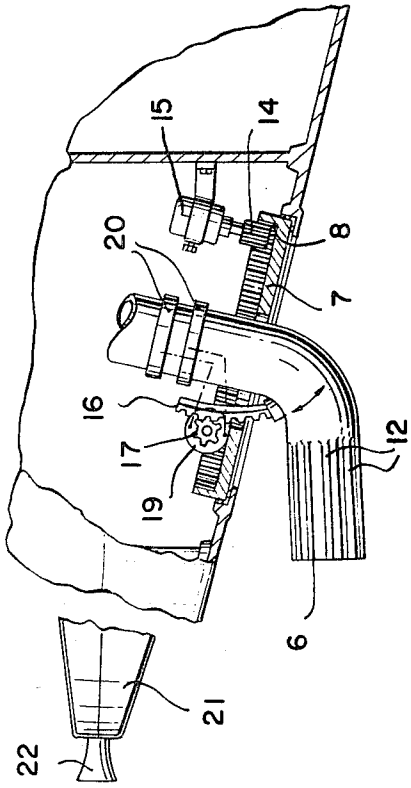

FIG. 3

INVENTOR.
KARL JAEGER
BY
Karl F. Ross
ATTORNEY

16 || @HighEarthOrbit_ linktr.ee/Grider2

VERTICAL TAKEOFF AND LANDING AIRCRAFT

FIELD OF THE INVENTION

The present invention relates to an aircraft and, more particularly, to an aircraft of the vertical takeoff and landing (V-TOL) type.

BACKGROUND OF THE INVENTION

There are two general types of aircraft: those which use air currents passing over relatively fixed airfoils for lift, and those using substantially horizontal fans or screws to mount in the air. Both types offer particular advantages and disadvantages. The conventional airplane is relatively inexpensive and can attain great speeds with large payloads; however, it requires extensive takeoff and landing facilities and is adversely affected by many wind conditions. Those aircraft of the helicopter type can take off and land vertically on any more or less flat and solid surface; but they are very expensive, can only attain relatively low cruising speeds, and cannot carry large payloads.

Solutions to the above-mentioned difficulties have been attempted in the form of hybrid aircraft supposedly combining the advantages of the two types while obviating their disadvantages. One such essay is an aircraft equipped with horizontally oriented screw propellers that are used only on takeoff and landing and are folded back during normal flight wherein conventional wings and vertically oriented fans are used. Sometimes the entire wing-and-propeller assembly is rotatable through 90° to make this possible. Such an aircraft has certain advantages, yet it still uses the principle of lift generated by airflow over an airfoil for conventional flight and has, therefore, several disadvantages. Namely, such a vehicle must attain a certain horizontal velocity before it can be converted from one mode to the other, a speed often very difficult to obtain with the means at hand. Furthermore such aircraft are complicated and expensive in the extreme and, thus, troublesome and often dangerous.

OBJECTS OF THE INVENTION

It is, therefore, the general object of the present invention to provide an improved aircraft.

A more specific object is to provide an aircraft of the VTOL type which overcomes the disadvantages of the above-described aircraft.

SUMMARY OF THE INVENTION

The above objects are attained, in accordance with some of the features of the present invention, by an aircraft having a discus-shaped fuselage mounting a plurality of circumferentially spaced lift-generating assemblies and thereby being a sort of flying saucer. Each assembly comprises a rotor above or flush with the fuselage and oriented in a generally horizontal plane, means for rotationally driving the rotor, preferably in the form of a radial-piston engine, and a compressor below each rotor sucking air in from above and expelling it below through a nozzle. Control means is provided to turn the nozzles individually or jointly in any substantially horizontal direction and to turn them through substantially 90° so that they can point straight down, or off to any side.

Such an aircraft can take off or land vertically, the lift being generated substantially by the rotors and by the air being expelled in high-pressure jets from the bottom of the aircraft. Once airborne, the craft can be displaced horizontally by pointing the nozzles back, in the direction of travel. Simple alteration of motor speed and orientation of the nozzles thus controls the craft fully. The rotors above the fuselage virtually eliminate drag during takeoff, and permit such takeoff regardless of wind direction.

According to an important feature of this invention, the fuselage is defined between an upper and a lower conical surface (of the upper and lower halves of the airframe) centered on the vertical axis of the aircraft so that the fuselage tapers radially outward, the structure having its center of gravity located along the vertical axis and preferably at the lower third of the latter so that disturbances of the aircraft in flight, e.g., as a result of air turbulence will immediately result in a compensating movement of the aircraft to restore its horizontal position with the center of gravity located in the same vertical line with the top of the aircraft. It is important also to note that the lift-generating means act along the upper surface of the fuselage and thereby provides a lever type of action to restore aircraft stability.

An important aspect of this invention resides in the provision, in addition to airscrews (propellers), lift-generating fans with air increase formed by openings in the upper conical surface of the fuselage while the nozzles discharge high-velocity jets of air along the lower conical surface. The advantages of an arrangement of this type are that it may make use in a novel manner, of principles which have already been recognized in fixed-wing aircraft. Thus it is known to reduce the viscous drag or air resistance along the leading edge and upper skin of a fixed airfoil by providing openings in the latter through which the boundary layer is drawn and discharged below the airfoil or at its trailing edge, thereby eliminating the turbulence along the airfoil surfaces and increasing both propulsion and lift efficiency. In accordance with this principle, the fans draw air from along the upper surface and feed the air to the nozzles directly or through a compressor which may be driven on the same shafts as the fans, turbulence along the upper surface of the fuselage is minimized and air resistance reduced. The fans, moreover, may alternate with individual airscrew arrangements and/or pairs or triplets of such airscrews and may be driven by any convenient prime movement. The airscrews or propellers are advantageously spaced above the surface so that immediately below that there may be provided the open mouth or inlets of the compressors which are coupled with the propellers.

I have found, most surprisingly, that high stability can be assured and simple steering or rudder control accomplished by providing the discharge nozzles as flexible ducts whose upper portions extend axially and thus are aligned with the shafts of the respective compressors, propellers and fans, while the lower portion of each duct is bent in a form of an elbow to provide a discharge and extending generally radially with respect to the axis of the upper portion of the duct. The elbow is lodged in a control disk which is generally planar and lies along the upwardly and outwardly inclined frustoconical underside of the fuselage so as to be rotatable about an axis intersecting the axis of the respective propeller, fan, or compressor and extending perpendicular to the underside of the fuselage. An especially important characteristic of this invention is that the depending portion of the elbow, which extends more or less radially as noted above, is formed with longitudinally extending fins performing a rudder function.

DESCRIPTION OF THE DRAWING

The above and other objects, features, and advantages will become more fully apparent in the following description, reference being made to the accompanying drawing, in which:

FIG. 1 is a diagrammatic top view partly broken away and partly in section of an aircraft according to the present invention;

FIG. 2 is a section along the line II—II of FIG. 1; and

FIG. 3 is a vertical section showing details of FIG. 1 in enlarged scale;

FIG. 4 is a cross section view of the aircraft's rotatable nozzles disclosing the stabilizing fins in enlarged scale.

SPECIFIC DESCRIPTION

As shown in FIGS. 1–3 the aircraft has a fuselage **10** shaped like a discus with upper and lower conical faces, thereby making the craft into a sort of flying saucer. Spaced around this fuselage **10**, equidistant from a center axis **18** and angularly equidistant from one another are a plurality, here **12**, of lift-

17 || @HighEarthOrbit_ linktr.ee/Grider2

generating assemblies **11**. Each assembly has a rotor in the form of an airscrew propeller **2** or a lift fan **3**, the distribution depending on the size and weight of the craft. The airscrews **2** are substantially above the fuselage **10**, while the fans **3** are virtually flush therewith.

Below each rotor, mounted in the fuselage **10**, is a compressor **4** which draws air in from below the rotor and expels it through a flexible tube **5**. This compressor **4** is mounted on the same shaft with the rotor which is itself driven by a radial-piston engine **1**.

FIG. **3** shows more details of the craft. Mounted on the end of the tube **5** is a nozzle **6** provided with longitudinal laterally projecting fins **12** acting as rudders or stabilizers. The tube **5** is fitted through a disk **7** formed with an internal gear **8** which meshes with a pinion **14** on an electric motor **15**. This arrangement, with motor **15**, allows the nozzles **6** to be pointed in any horizontal direction. The nozzle **6** further mounts an arcuate rack **16** which meshes with a pinion **17** of a motor **19** connected through sliprings **20** to a source of power. This motor **19** adjusts the inclination to the vertical of the nozzle, thereby allowing it to point straight down or, as shown in FIG. **2**, to the side.

The fuselage has an extreme edge **21**, as shown in FIG. **3**, which may carry a ramjet **22** used during flight for extra speed.

In order to take off, the nozzles **6** are either pointed straight downward, or directed somewhat inwardly toward one another. Once the vehicle is airborne, the nozzles **6** are directed to a side, all in the same direction, to displace the craft in the opposite direction. The jets **22** along one portion of the edge **21** assist the flight in the horizontal.

The center of gravity of the loaded craft is advantageously held in the lower third of a center region **23**. In this manner, the lift caused by the assemblies **11** is distributed all around the load and mostly above it, thereby giving the craft great stability. Indeed, the craft's normal center of gravity is exactly in the center, due mainly to the symmetrical construction, so that this stability is built in. Furthermore, change in speed of any of the motors **1** can be effected to raise or lower an edge of the craft, if desired.

I claim:

1. An aircraft comprising:

a closed-skin discus-shaped fuselage of circular outline having conical upper and lower halves centered on an axis and defining all of the airfoil surface of the aircraft within said outline, the center of gravity of the aircraft being located along said axis in said lower half;

a plurality of lift-generating assemblies spaced around said fuselage, each of said assemblies including a respective rotor rotatable along the top of said fuselage, means for rotationally driving said rotor, a respective compressor in said fuselage below said rotor drawing in and compressing air from below said rotor, and a respective nozzle connected to said compressor to expel from below said fuselage the air compressed thereby, said nozzles projecting downwardly below said fuselage and exclusively forming rudder controls for said aircraft; and

control means for selectively directionally orienting each of said nozzles, each of said control means including a rotatable disk mounted on and substantially flush with the lower surface of said fuselage, said nozzle being formed at the lower end of a fixed-elbow tube rising through the disk to the compressor, and drive means connected to said disk for rotating same and thereby rotating said nozzle.

2. The aircraft defined in claim **1** wherein each of said control means further includes means for orienting the respective tube and nozzle in a vertical plane.

3. The aircraft defined in claim **1** wherein said rotor is an airscrew spaced above said fuselage.

4. The aircraft defined in claim **1** wherein said rotor is a fan substantially flush with the upper surface of the fuselage.

5. The aircraft defined in claim **1** wherein said nozzles are formed with longitudinal fins below said fuselage.

6. The aircraft defined in claim **1** further comprising a shaft, said rotor and said compressor being mounted on said common shaft and said means for rotationally driving said rotor thereby also driving said compressor.

7. The aircraft defined in claim **1** wherein said assemblies are angularly equispaced around said fuselage.

* * * * *

18 || @HighEarthOrbit_ linktr.ee/Grider2

May 15, 1962 C. P. LENT 3,034,747

AIRCRAFT WITH DISCOID SUSTAINING AIRFOIL

Filed Jan. 8, 1957 5 Sheets-Sheet 1

FIG. 1

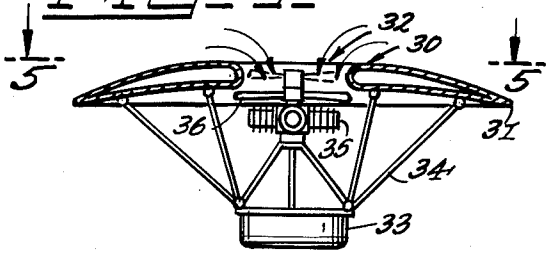

FIG. 5

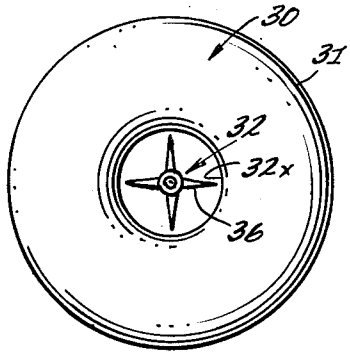

FIG. 2

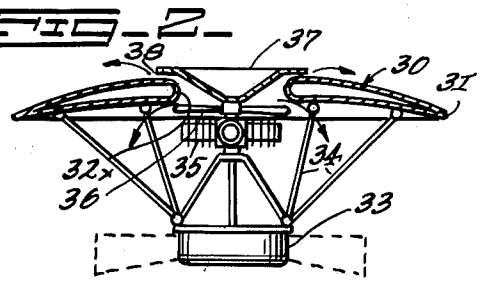

FIG. 3

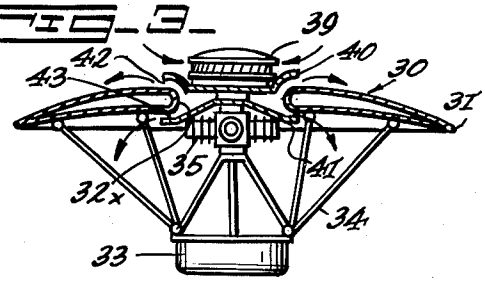

FIG. 6

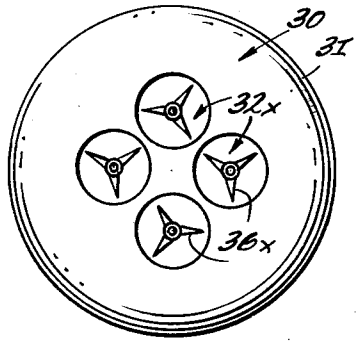

FIG. 4

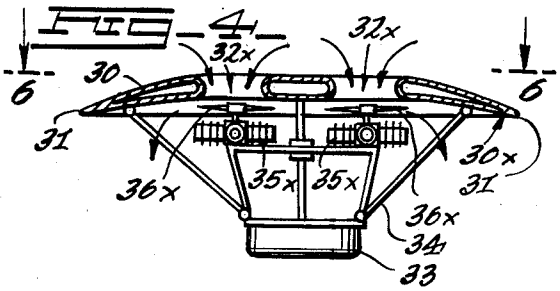

INVENTOR.
Constantin P. Lent

19 || @HighEarthOrbit_ linktr.ee/Grider2

May 15, 1962 C. P. LENT 3,034,747

AIRCRAFT WITH DISCOID SUSTAINING AIRFOIL

Filed Jan. 8, 1957 5 Sheets-Sheet 2

FIG. 7

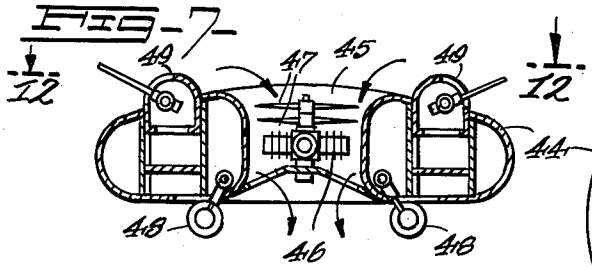

FIG. 12

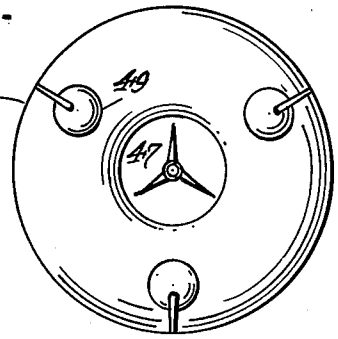

FIG. 8

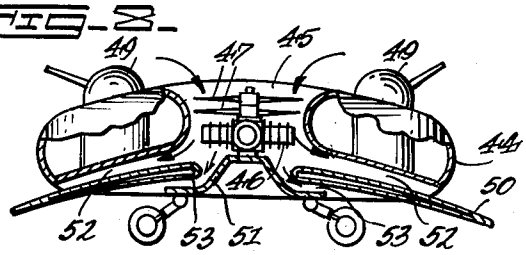

FIG. 13

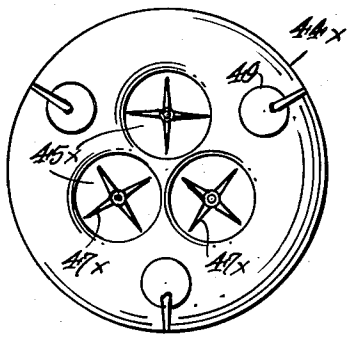

FIG. 9

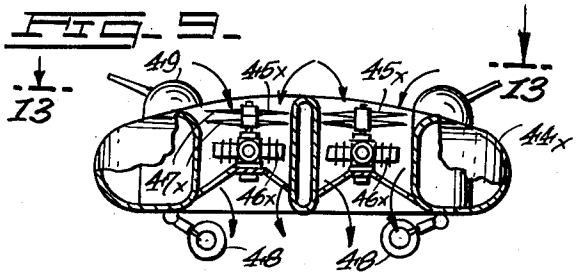

FIG. 10

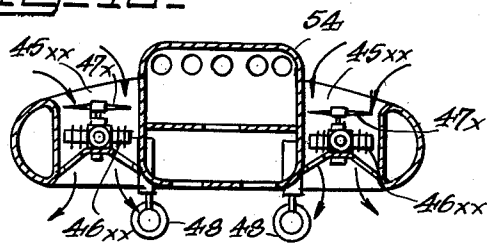

FIG. 14

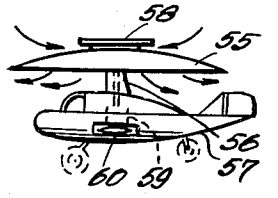

FIG. 11

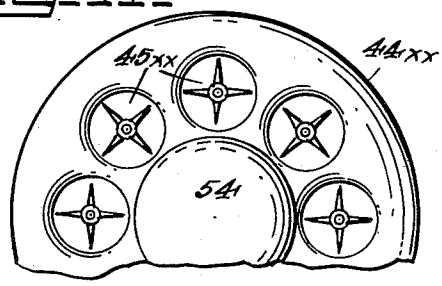

INVENTOR.
Constantin P Lent

20 || @HighEarthOrbit_ linktr.ee/Grider2

May 15, 1962 C. P. LENT 3,034,747

AIRCRAFT WITH DISCOID SUSTAINING AIRFOIL

Filed Jan. 8, 1957 5 Sheets-Sheet 3

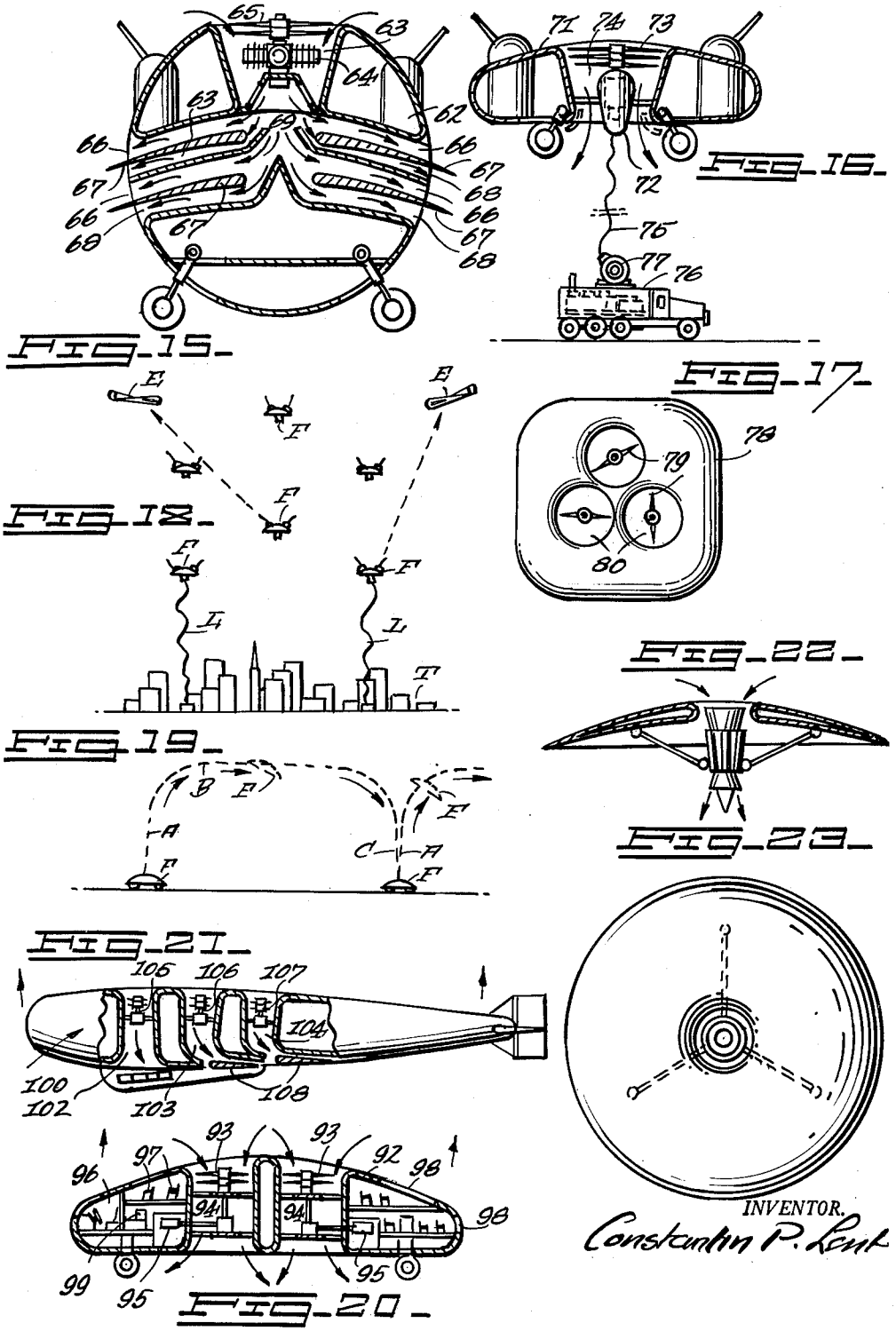

INVENTOR.
Constantin P. Lent

May 15, 1962 C. P. LENT 3,034,747

AIRCRAFT WITH DISCOID SUSTAINING AIRFOIL

Filed Jan. 8, 1957 5 Sheets-Sheet 4

FIG. 24

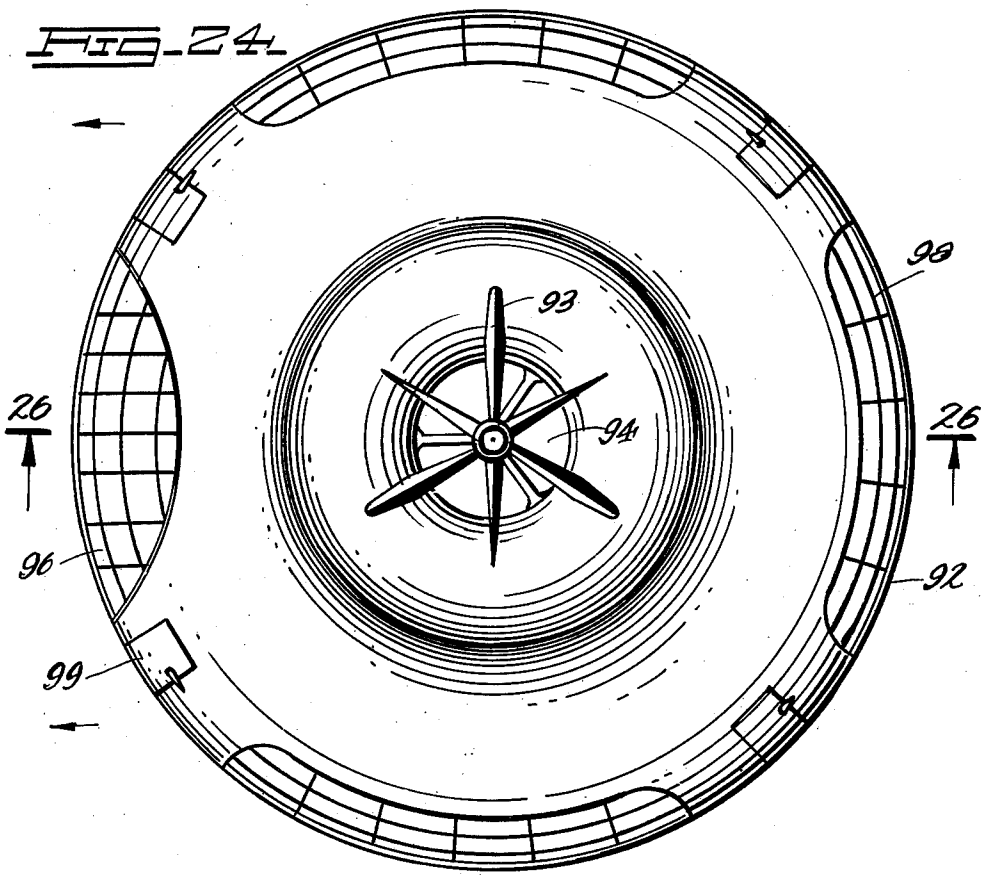

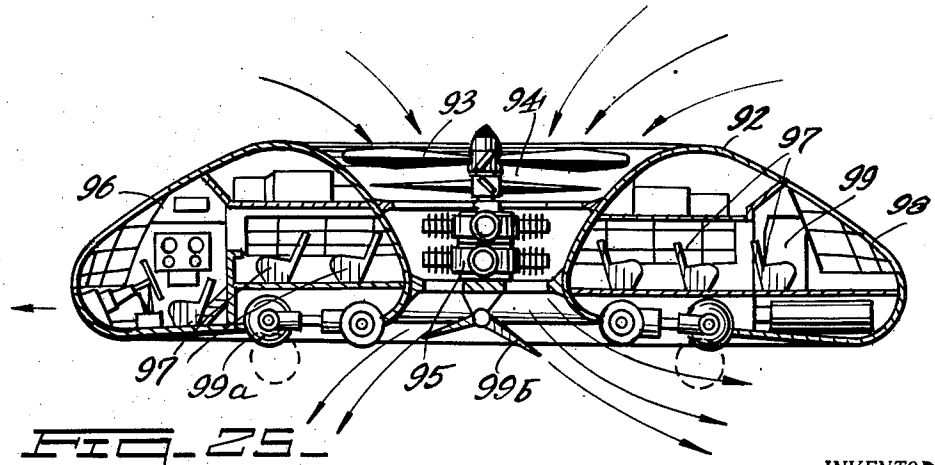

FIG. 25

INVENTOR
Constantin P Lent

May 15, 1962 C. P. LENT 3,034,747

AIRCRAFT WITH DISCOID SUSTAINING AIRFOIL

Filed Jan. 8, 1957 5 Sheets-Sheet 5

FIG. 26.

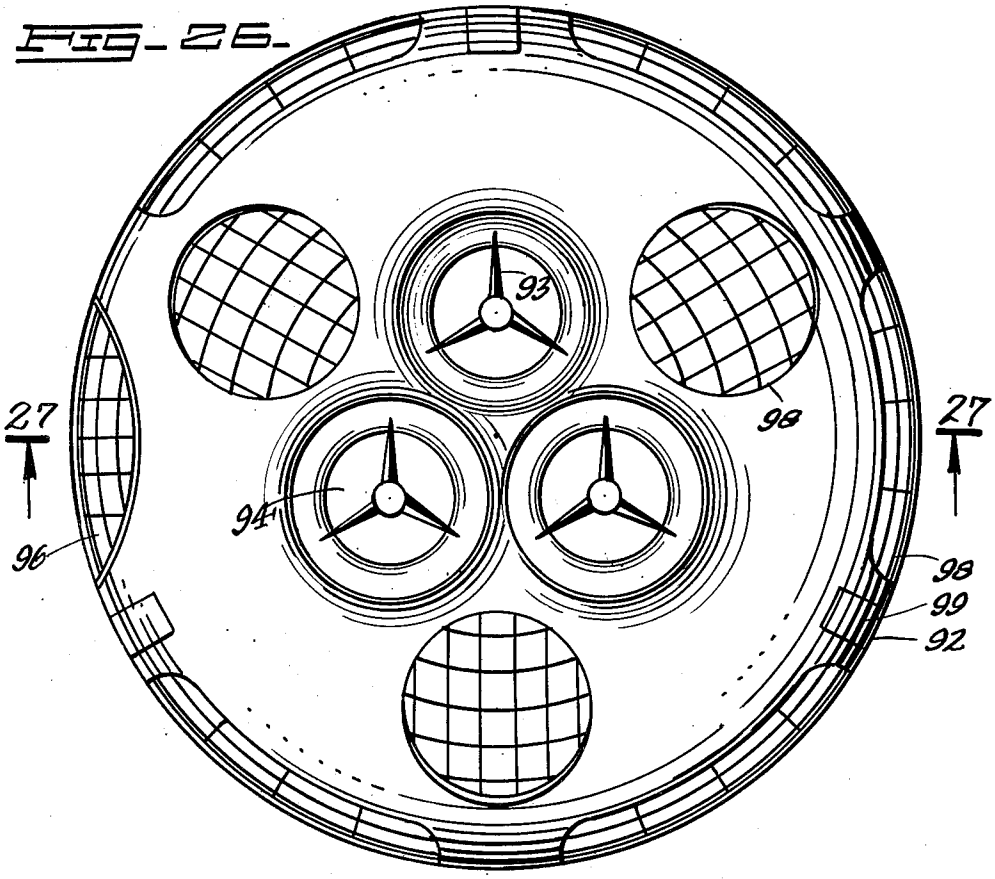

FIG. 27.

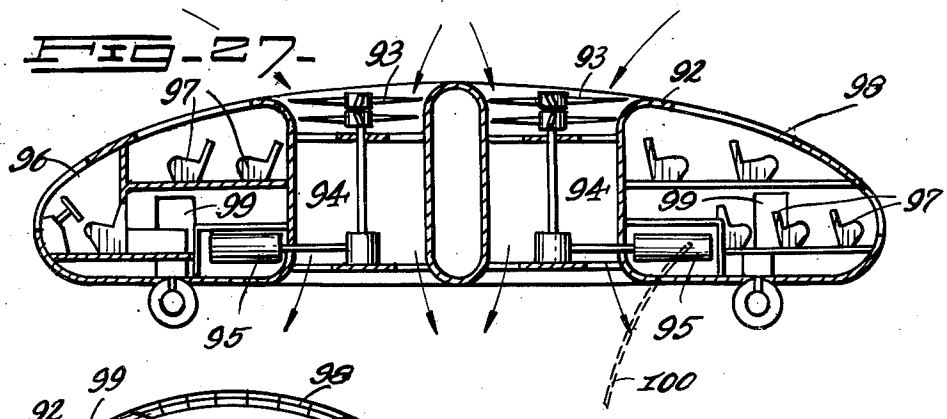

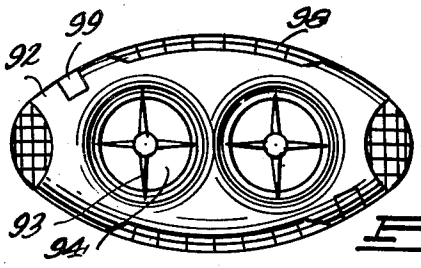

FIG. 28.

INVENTOR.
Constantin P. Lent
BY

23 || @HighEarthOrbit_ linktr.ee/Grider2

United States Patent Office

3,034,747

Patented May 15, 1962

1

3,034,747

AIRCRAFT WITH DISCOID SUSTAINING AIRFOIL

Constantin P. Lent, 50 E. 42nd St., New York, N.Y.

Filed Jan. 8, 1957, Ser. No. 644,427
4 Claims. (Cl. 244—23)

This invention relates to saucer-shaped aircraft and more particularly to vehicles having a round or circular body contour known as flying saucers.

The flying saucer described in this invention is not a thing in the realm of phantasy but a very practical aircraft obeying approved aerodynamic principles. Its mode of operation permits it to remain indefinitely in the air and as long as its prime-mover is supplied with fuel. It can hover over the ground at any height from 5 to 50,000 feet and more. It can move transversely under the control of a navigator and crew. It can carry passengers.

The saucer-shaped aircraft described in this invention can find utilization in commercial transportation such as air travel, trans-continental and trans-oceanic passenger service, commuter transport, mail transport and delivery and bus service for cities and towns. it is extremely useful for private plane operation.

The flying saucer described in this invention can attain tremendous speeds and its maneuverability is enormous. It can rise vertically instantaneously and travel at supersonic speeds. But it can also fly at extremely low speeds and if necessary it can land and take-off vertically at a passenger elevator speed or even less.

The flying saucer is safe and easy to operate. In case of motor failure, it will safely land by means of its circular wing the latter serving as a landing parachute.

Heretofore, heavier than air craft such as airplanes and helicopters relied upon the aerodynamic action of straight or slanted wings to produce the desirable lift. In the helicopter the aerodynamic action of the rotor blades being rotated through the air produce the lift.

In an airplane, the fuselage of the craft including its wings is propelled through the medium of the atmospheric air by means of the forward pull of propellers which are driven by reciprocating engines. In jet planes, forward pull is produced by the reaction of the gases in jet motors. In rocket driven planes, forward motion is produced by the reaction of the gases in its rocket motors. The well known aerodynamic action of the airfoil of the wing of the plane as it streams through the air creates a vacuum space above the wing and an air pressure space below it. The sum total of both, vacuum and air pressure, producing the vertical lift component which permits the wing respectively the fuselage of the plane to leave the ground. This is the principle that makes an airplane fly.

In a helicopter, the oversized rotor blades have an airfoil cross-section similar to the wing of the plane. As the blades of the rotor are rotated through the air by means of its motor, a vacuum space is created above the blades and an air pressure below; the sum total of both producing a vertical lift. This is the principle that makes a helicopter hover above ground.

In the flying saucer craft described in this invention, the fuselage of the round-shaped body of the vehicle or circular wing is provided at the center portion thereof with air inlets or openings to permit a flow of air. The airflow in question passes from above the fuselage of the craft, under it. The flow of air is created by means of propellers or rotors driven by a prime-mover.

The action of the air passing through the air inlet in the vehicle is twofold. First, the sucking action of the propeller or rotor lifts the craft aloft and second, the flow of air thus created is directed against the airfoil

2

cross-section of the circular wing to create a vacuum space over the wing and air pressure below it. The sum total of both, suction and aerodynamic action producing a lift.

Generally speaking this invention provides a circular structure which is equipped with one or a plurality of openings passing through said structure and being fitted with a motive means for creating an air stream and directing it from above said structure below it. The stream thus created creating a vacuum over the top surface of the circular structure and air pressure under said structure. The resultant sum of vacuum and pressure creating a vertical lift and permitting the circular wing to hover or move anywhere under the direction of a navigator.

One object of this invention is to provide a circular wing for aircraft provided with motive means to create a vertical lift.

Another object of this invention is to provide a circular wing aircraft and motive means to create a vertical lift.

Still another object of this invention is to provide a circular wing aircraft provided with one single centrally located opening said circular wing aircraft resembling a doughnut-shaped fuselage.

Still another object of this invention is to provide a round-shaped wing structure for aircraft provided with more than one opening such as two, three, four etc., located centrally in respect to the vertical axis of said round-shaped wing structure.

Still another object of this invention is to provide motive means within the centrally located opening or openings in said round-shaped wing fuselage.

Still another object of this invention is to provide propeller means within the centrally located opening or openings in said round-shaped wing fuselage.

Still another object of this invention is to provide a round-shaped wing fuselage provided with rotor means within centrally located opening or openings in said round-shaped wing fuselage.

Still another object of this invention is to provide a saucer-shaped aircraft which will have one, two, three, four or even more air intakes which will be located upon its outer surface leading into its fuselage. Said openings will contain propellers or air rotors to create a flow of air. The propellers and air rotors can be operated by means of reciprocating engines, electric motors, jets etc.

Another object of this invention is to provide an arrangement of wing structure and motive force to create a stream of air which being drawn from above said aircraft and its wing will be directed below it. This action producing a vertical lift.

Another object of this invention is to provide a doughnut-shaped craft having a circular wing of airfoil cross-section and means to pass a stream of air against said wing. The aerodynamic action of the air against said wing permitting the saucer doughnut-shaped craft not only to rise vertically but also to hover over the same position indefinitely or move saidways or in any other direction under the control of a navigator and crew.

Still another object of this invention is to create a flow of air and direct it against the inside edge of a circular airfoil differentiating from a straight airfoil. The action of the air blown against the inside edge of the circular wing creating a vacuum space over the wing and an air pressure space under it thus making it possible for said wing to take off vertically.

A further object of this invention is to provide a fuselage of a round-shaped wing contour which will contain an air inlet or hole in its center. The round-shaped wing being stationary in relation to a set of rotating propellers

24 || @HighEarthOrbit_ linktr.ee/Grider2

or air rotors. The propellers or rotors being located adjacent to said air inlet. The action of the propellers or rotors creating a stream of air through said inlet in the round-shaped wing.

Still another object of this invention is to provide double acting propeller means within the openings in said round-shaped wing fuselage.

Still another object of this invention is to provide a circular wing structure and reciprocating engine means or electric motor means to operate propellers or rotors contained within opening leading into said wing structure.

A still further object of this invention is to provide a round-shaped wing structure and air pump means located within openings leading through said round-shaped structure.

Still another object of this invention is to provide a round-shaped wing structure, holes passing through said structure, propeller or rotor means located within said holes. Said holes being equipped with baffle plates to direct a stream of air entering said holes from above through the holes in said wing structure.

Still another object of this invention is to provide a round-shaped wing structure resembling a doughnut, a single hole passing in the center portion of said structure, propeller or air rotor means inside said hole. Said hole being provided with baffle plates to direct a stream of air entering said holes against the wall portion comprising said holes in said wing structure.

Still another object of this invention is to provide a round-shaped wing structure comprising an airfoil with a single opening in its center, said wing structure resembling a doughnut-shaped wing, having a propeller or air motor means located within said opening. Said round-shaped wing provided also with a baffle plate within said circular opening for directing the air entering said opening from above against the internal edge of said airfoil.

A still further object of this invention is to provide a circular wing structure, said structure in cross-section being similar to the cross-section of standard airplane wings, or air foils.

A still further object of this invention is to provide a circular wing structure which has a number of openings running around its periphery, these openings provided with propeller or rotor means and motor means to operate said propeller or rotors.

A still further object of this invention is to provide a circular wing structure having one or more openings passing through said structure and cable means to supply electric current to electric motors located within said openings to operate rotors or propellers.

A still further object of this invention is to provide a spherical aircraft which is equipped with one, two or more concentric openings leading into said aircraft, said openings equipped with air rotors or propellers and motive means to operate said propellers to create a stream of air from above and direct it below.

A still further object of this invention is to provide a spherical aircraft provided with a central opening which contains an engine to operate propellers or air rotors to create a stream of air and to direct it against one or more circular wing-shaped airfoils.

A still further object of this invention is to provide a square or polygonal shaped wing fuselage which is equipped with one or more openings and propellers or air rotors in said openings.

A still further object of this invention is to provide a square shaped or polygonal wing fuselage which in cross-section is a standard airfoil wing, said fuselage being provided with one or more co-centric openings, propellers in said openings, and motive means to operate said propellers.

A still further object of this invention is to provide an ellipse-shaped wing structure containing one or two or more openings, propeller or air rotor means in said openings and motor means to operate said propellers or rotors.

A still further object of this invention is to provide a circular wing structure which has a number of openings running around the periphery, these openings provided with propeller or rotor means and motor means to operate said propellers.

A still further object of this invention is to provide a circular wing structure having one or more openings passing through said structure and cable means to supply electric current to electric motors located within said openings to operate rotors.

A still further object of this invention is to provide a spherical aircraft which is equipped with one, two or more co-centric openings leading into said craft, said openings equipped with air rotors or propellers and motive means to operate said propellers to create a stream of air from above and direct it below the wing structure of said aircraft.

A still further object of this invention is to provide a spherical aircraft equipped with a central opening which contains an engine to operate propellers or air rotors to create a stream of air and to direct it against one or two or more circular wing-shaped airfoils located in said aircraft.

A still further object of this invention is to provide a square or polygonal shaped wing fuselage which may be equipped with one or more openings and a set of propellers in said openings.

A still further object of this invention is to provide a square-shaped or polygonal wing fuselage which in cross-section resembles an airfoil. Said fuselage being provided with multiple co-centric openings, with propellers in said openings, and motive means to operate said propellers.

A still additional object of this invention is to provide an ellipse-shaped wing structure which may contain one or more openings, with propellers or rotor means in said openings and with motive means to operate said rotors or propellers.

Other objects will appear as the description of this specification will proceed.

Referring to figures:

FIG. 1 is a cross-section through a circular saucer-shaped wing fuselage showing the co-centric opening, propeller and reciprocating motor means to operate said propeller to create a stream of air from above and to direct it below said fuselage.

FIG. 2 is a cross-section through a circular doughnut-shaped wing structure showing co-centric opening, propeller means in said opening and reciprocating motor means to operate said propeller to create an air flow from below said structure and direct it against the inside edge of said doughnut-shaped wing structure.

FIG. 3 is a cross-section through a circular doughnut-shaped wing structure showing a co-centric opening and a reciprocating motor means operating an air rotor to create a flow of air from above said wing and to direct said air against the inside edge of the opening in the wing.

FIG. 4 is a cross-section through a circular saucer-shaped wing fuselage, motor means located within openings located in said wing and reciprocating engines to operate said rotors or propellers to create a flow of air from above said wing and to direct it below.

FIG. 5 is a plan view of the circular saucer-shaped wing fuselage on the line **5—5** of FIG. 1, showing one co-centric opening.

FIG. 6 is a plan view of the circular saucer-shaped wing fuselage taken on the line **6—6** of FIG. 4, showing more than one co-centric openings.

FIG. 7 is a cross-section through a circular wing, showing co-centric opening, propeller and reciprocating motor means and its application as an army transport vehicle.

FIG. 8 is a circular doughnut-shaped wing structure similar to the one shown in FIG. 7, equipped with an

25 || @HighEarthOrbit_ linktr.ee/Grider2

airfoil wing and reciprocating engine to operate a propeller to direct a flow of air against said airfoil.

FIG. 9 is a cross-section through a circular wing structure showing more than one co-centric openings which are equipped with propeller and reciprocating engines to create an air flow from above and direct it below said wing structure.

FIG. 10 is a craft similar to the one shown in FIG. 9, equipped with a number of openings located peripheral to the center of the wing. The openings are equipped with propellers and reciprocating engines to create a flow of air from above said structure and direct it below.

FIG. 11 is a plan view on the line 11—11 of FIG. 10.

FIG. 12 is a plan view taken on line 12—12 of FIG. 7.

FIG. 13 is a view taken on the line 13—13 of FIG. 9.

FIG. 14 is a view showing the application of the circular saucer-shaped wing in connection with standard airplane fuselages to create a vertical lift.

FIG. 15 is a cross-section through a spherical fuselage showing a co-centric opening and propeller and reciprocating engine means to create a flow of air from above and direct it against the inside airfoil edge of circular saucer-shaped wings within said spherical fuselage.

FIG. 16 is a cross-section through a circular wing showing the co-centric opening and a propeller means being operated by an electric motor to create a flow of air from above said structure. It also shows the electric cable means which provides electric current from the ground which is generated by a stationary generator or a portable generator station.

FIG. 17 shows a plan view of a square-shaped doughnut wing equipped with more than one co-centric openings through which a flow of air is directed from above the wing below it.

FIG. 18 shows the manner in which a city can be protected by means of doughnut-shaped flying saucers from enemy aerial attacks. The flying saucers hovering, like flying forts, above the objective to shoot down the enemy aircraft.

FIG. 19 is a view showing the manner the flying saucer is launched vertically, how it hovers above ground and travels parallel to the ground and how it lands straight down. It is made to hop and hover from one place to another.

FIG. 20 is a cross-section through a flying saucer bus showing the arrangement of parts, the location of the passenger seats, the navigator's cabin and the propellers within the air inlets. Also the manner of operation.

FIG. 21 is a cross-section through a lighter than air craft, showing the manner in which the propellers or air rotors are contained within the air inlet channels and the application of airfoil surfaces to produce a vertical lift and transverse motion.

FIG. 22 is a section through the airfoil wing showing the application of a jet engine for the purpose of creating an air stream. The air stream created by the suction of the jet engine intake is diverted by means of baffle plates against the airfoil to create vertical lift.

FIG. 23 is an elevational view of FIG. 22, showing the circular wing with the jet engine to produce an air stream.

FIG. 24 is an elevational view of the air bus having a circular fuselage showing the air duct, the prime-mover and propeller means, and the arrangement of doors and windows around its circumference.

FIG. 25 is a section on the line 25—25 of FIG. 24, showing the air bus' interior with its seating capacity, the driver's seat, the driving instruments, and the duct passing through the fuselage.

FIG. 26 is a plan elevational view of a bus similar to the one shown in FIGS. 24 and 25, with its fuselage being provided with more than one air duct. The bus in this case has a fuselage with three vertical ducts.

FIG. 27 is a section on the line 27—27 taken through the bus in FIG. 26, showing the seating arrangement, the driver's seat, instruments and the air ducts passing through the fuselage.

FIG. 28 is a plan elevational view of a bus similar to the one shown in FIGS. 24 to 27 inclusive. In this case the fuselage is somewhat elongated, rather an ellipsoid, instead of circular.

Specifications

Referring more particularly to FIG. 1, numeral **30** indicates the fuselage of the saucer-shaped circular wing which consists of an outside peripheral rim **31** and an inside circular opening **32**. The opening or hole **32** in the circular fuselage **30** gives the wing a doughnut-shaped contour.

Preferably, in cross-section ,the circular wing resembles a standard airfoil, although it may possess any other cross-section such as circular, elliptical, parabolic, hyperbolic or rectangular.

A cabin-shaped structure **33** is suspended under the circular wing **30** and is secured to the latter preferably by means of cables **34**, or in some other manner. The cabin **33** might also be contained within the structure of the wing proper. A prime mover comprising a reciprocating engine **35** is suspended inside the circular opening **32** in the wing **30**. Propeller means **36**, comprising one or two propellers or an air rotor, is geared to the reciprocating engine **35** to be operated by the latter.

The propeller means **36** operated by the engine **35** creates a flow of air through the opening **32**. The air being drawn from the top over the wing, by the action of the rotating propeller blades, passes through the circular opening **32** and is directed below and under the wing **30**.

In FIG. 2, which shows a saucer-shaped wing similar in construction to the one shown in FIG. 1, a circular baffle disk **37** is contained within the circular opening **32** in the doughnut-shaped wing **30**. This arrangement is preferable when the propeller means **36** is rotated in such a manner as to create a flow of air from under circular wing directing it against the baffle disk **37**. Some of the air thus directed will pass through the space **38** formed by the inside edge **32*x*** of the opening **32** in the wing **30** and some will be blown directly under the circular wing proper.

Referring to FIG. 3, an air rotor **39** is utilized to create a flow of air from above the wing **30**. Preferably the rotor **39** is placed above the opening **32**. The opening **32** is also provided with a pair of circular baffle disks **40** and **41**. The reciprocating means **35** which rotates the air rotor **39** creates a flow of air directing it through the spaces **42** and **43** which are formed by the inside edge **32*x*** in the opening **32** of the wing **30**, the baffle disk above the wing and the baffle disk below it.

Referring more particularly to FIG. 4, it illustrates the application of the same principle of air flow as shown in FIGS. 1–3 inclusive having a wing **30*x*** similar in construction to the one shown in said figures but being also equipped with a plurality of openings **32*x*** instead of one. Propeller means **36*x*** which are located in the immediate proximity of the openings **32*x***, or inside said openings, are being operated by reciprocating engine means. Said means creating a flow of air from above the wing **30*x***, and through the openings **32*x*** directing the air under the wing proper.

FIGS. 5 and 6 respectively show views taken on the line 5—5 of FIG. 1, and 6—6 of FIG. 4.

FIGS. 7 to 13 inclusive, show the application of the flying saucer principle to transport vehicles, for commercial or military use such as air buses, army transport, fortifications etc.

In FIG. 7, numeral **49** is the fuselage of the vehicle preferably of circular contour. A reciprocating motor means **46** is located in a centrally located opening **45**; the motor means **46** operating a set of counter-driven propellers **47**. The vehicle is also equipped with a landing gear **48** which includes a set of inflated rubber tires or the

26 || @HighEarthOrbit_ linktr.ee/Grider2

like. The vehicle shown in FIG. 7 can be used for passenger service or troop transport. It can be equipped with gun turrets **49** and other defense weapons.

In the vehicle shown in FIG. 8, it is very similar in construction to the one shown in FIG. 7, differentiating only in the fact that an extra doughnut-shaped wing **50** is added to it. The wing **50** is located in the lower portion of the vehicle **44**. A baffle disk **51** is utilized to direct the air through the space **52**, above the wing **50** and through the space **53** below the wing **50**.

Referring to FIG. 9, it shows the application of a plurality of prime movers **46***x* in connection with more than one openings **45***x* through which air is sucked by the action of propeller means **47***x* in the openings **45***x*. Propeller means **47***x* are operated by the prime mover means **46***x*.

FIG. 10 shows the application of the flying saucer principle in connection with a plurality of prime mover means which are placed upon the outside circumference or periphery of the vehicle. In this particular case the openings **45***xx* are located peripherally the cabin **54**. The prime mover means **46***xx* drive propeller or rotor means **47***xx* which are set within the openings **45***xx* in the vehicle.

FIG. 11 is a plan view of FIG. 10, showing the manner in which the multipowered units **46***xx* are arranged upon the vehicle **44***xx*.

FIGS. 12 and 13 are plan views taken on the lines **12—12** of FIG. 7 and **13—13** of FIG. 9 respectively.

FIG. 14 shows the application of the flying saucer principle in connection with standard airplane fuselages. In this particular case the doughnut-shaped wing is secured to the plane **57** by a connecting structure **56**. The prime mover which is driving the air rotor **58** creates a flow of air from above the wing **55** directing it below same to produce a vertical lift. Jet motors or propeller means **60** are used to provide forward motion.

Referring more particularly to FIG. 15, the vehicle **61** is of a spherical contour and includes a spherical fuselage **62** which has one, two, three, four or more openings **63**. A prime mover **64** is located within the opening **63** to operate a pair of counter-moving propeller means **65**. The stream of air created by the propeller means **65** is directed through the space **66** above the saucer-shaped wings **67** and below said wings through the space **68**. The baffle disks **69** and **70** serve to direct the air.

FIG. 16 shows a vehicle **71**, similar in construction to the one shown in FIGS. 1 to 15 inclusive, in this particular case the propeller means **73** is being operated by means of an electric motor **72** instead of a reciprocating engine means. The electric motor **72** drives the propeller means **73** which is located within the openings **74**. A flexible electric cable means **75** leads from the electric motor **72** to a portable or stationary generating station **76**. The electric current generated by the generating station **76** is delivered to the vehicle **71** by means of the cable means **75** which is wound around cable-reel **77**.

In FIG. 17 is shown a vehicle **78** similar in construction to the one shown in FIGS. 1 to 16 inclusive, preferably of rectangular contour. The wing **78** is equipped with propeller means **79** which are located within the opening **80** and are operated by prime mover means (not shown).

FIG. 18 is showing the manner in which the flying saucer shown in FIGS. 1 to 17 inclusive can be operated in warfare for defense purposes to protect a city from enemy attacks. Some flying saucers F shown in FIG. 18 are operated by means of reciprocating engines while others by means of electric motors which are fed electric current through the medium of the flexible cables L. The attacking enemy planes are designated as E.

FIG. 19 shows the manner in which the flying saucer can be utilized as a transport vehicle and the manner in which it can move or hop from place to place. Upon landing the vehicle F goes straight up as shown at A. It is flying across the country as it is shown at B and it lands, straight down as it is shown at C.

FIG. 20 shows the application of the flying saucer principle to air buses. Numeral **92** designates the fuselage of the air bus, **93** the propellers which are driven by motors **95**. The air is sucked by the propellers **93** through the vertical inlets **94**. The passenger seats **97** are located around the circumference of the vehicle and the driver's cabin **96** faces forward. The windows **98** permit outside vision while door opening **97** permits the loading of the craft.

Referring to FIG. 21, it is showing the application of the flying saucer principle to lighter than air craft. Numeral **100** designates the body of the craft which supports cabin **101** under its fuselage. The craft **100** is equipped with a number of canals **102**, **103** and **104** which are vertically located within its fuselage. Propeller and motor units **105**, **106** and **107** serve to create a stream of air from above the craft and direct it under its belly. In the case of the canal **102**, the air is directed towards the lower portion of its fuselage while in the case of the canals **103** and **104** the air flow is directed against the airfoil wings **108**, located under the belly of the craft **100** to create a vertical lift which is independent from the lift created by the craft's gas tanks.

The stream of air thus produced by the propeller and motor units **106** and **107** also produces a horizontal force which drives the lighter than air craft forward in addition to the lift created by said wings because of their airfoil cross-section.

The application of the saucer principle herein described to lighter than air craft will dispense with the need for large gas tanks to lift the vehicle and permit the use of smaller fuselage and create a greater lift.

What I claim is:

1. An air bus comprising a circular fuselage having an entry and an exit door and windows around its outer circumference, a driver's seat and navigational instruments mounted in said fuselage; said vehicle having a centrally located vertical duct passing through said fuselage, a vertical shaft mounted in the duct, a prime mover engine means in said duct to operate said shaft, propeller means fastened to said shaft to rotate when said prime mover operates said shaft, said duct having an opening, baffle plates mounted in said duct opening to divert the flow of air created by the operation of said propeller to fly said vehicle, and shock absorbing means mounted on said fuselage to facilitate safe launching and landing in said air bus.

2. A vehicle comprising a circular fuselage having an entry and an exit door and windows around its outer circumference, a driver's seat and navigational instruments mounted in said fuselage, said vehicle having more than one vertical duct passing through said fuselage, a vertical shaft mounted in each duct, a prime-mover engine means in each duct to operate each shaft, propeller means fastened to each shaft to rotate when each prime-mover operates its respective shaft, each duct having an opening, baffle plates mounted in said duct openings to divert the flow of air created by the operation of said propellers to fly said vehicle, and shock absorbing means mounted on said fuselage to facilitate safe launching and landing of said vehicle.

3. A vehicle comprising a circular fuselage having an entry and an exit door and windows around its outer circumference, a driver's seat and navigational instruments mounted in said fuselage, said vehicle having a centrally located vertical duct passing through said fuselage, a vertical shaft mounted in the duct, a prime-mover engine means in said duct, said prime-mover comprising an electric motor, propeller means fastened to said shaft to rotate when said electric motor operates said shaft, said duct having an opening, baffle plates mounted in said duct

27 || @HighEarthOrbit_ linktr.ee/Grider2

opening to divert the flow of air created by the operation of said propeller to fly said vehicle, shock absorbing means mounted on said fuselage to facilitate safe launching and landing of said vehicle, and an electric cable leading from said motor in said vehicle to a power generating means on the ground, said cable trailing from said vehicle when said vehicle takes off.

4. An air vehicle comprising an elliptically-shaped fuselage having an exit and an entry door and windows around its outer contour, a driver's seat and navigational instruments mounted in said fuselage, said vehicle having more than one vertical duct passing through said fuselage, a vertical shaft mounted in each duct, a prime-mover engine means in each duct to operate each shaft, propeller means fastened to each shaft to rotate when said prime-movers operate said shafts, each duct having an opening, baffle plates mounted in said duct openings to divert the flow of air created by the operation of said propellers to fly said vehicle, and shock absorbing means mounted on said fuselage to facilitate safe launching and landing.

References Cited in the file of this patent

UNITED STATES PATENTS

1,846,125	La Fon	Feb. 23, 1932
1,911,041	Smyser	May 23, 1933
2,008,464	Nishi	July 16, 1935
2,399,218	Felberg	Apr. 30, 1946
2,468,787	Sharpe	May 3, 1949
2,547,266	Hoglin	Apr. 3, 1951
2,726,829	Hillis	Dec. 13, 1955
2,730,311	Doak	Jan. 10, 1956
2,876,964	Streib	Mar. 10, 1959

FOREIGN PATENTS

16,153	Great Britain	of 1908
129,142	Great Britain	July 10, 1919
691,627	France	July 15, 1930
406,971	Great Britain	May 30, 1932
1,138,029	France	Jan. 21, 1957

Jan. 10, 1956 LE ROY W. CROOKES 2,730,312

DISCOID-SHAPED AIRCRAFT

Filed Nov. 23, 1953

Fig. 1

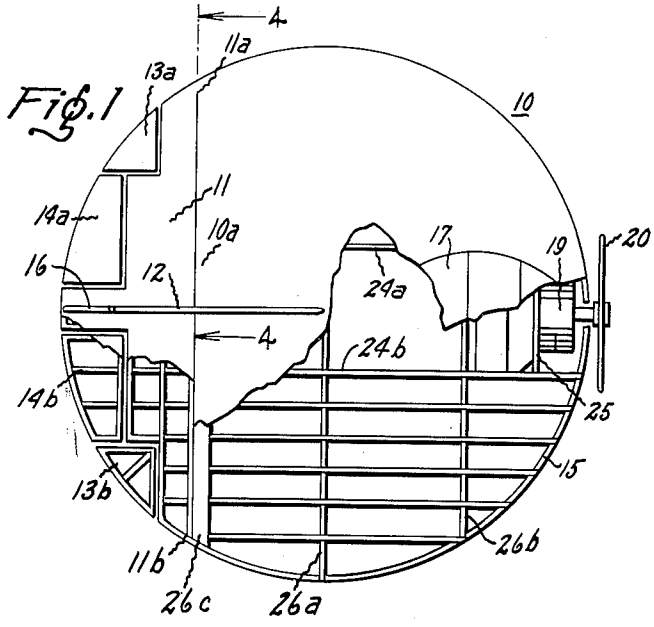

Fig. 4

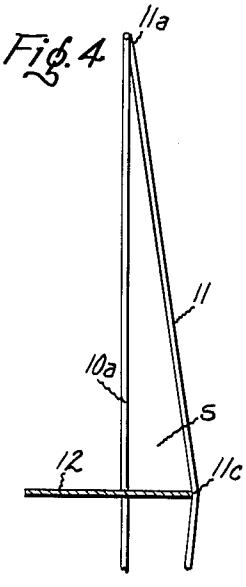

Fig. 2

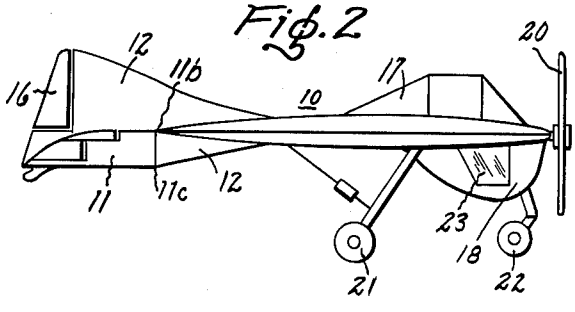

Fig. 5

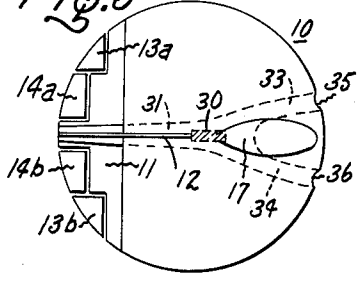

Fig. 3

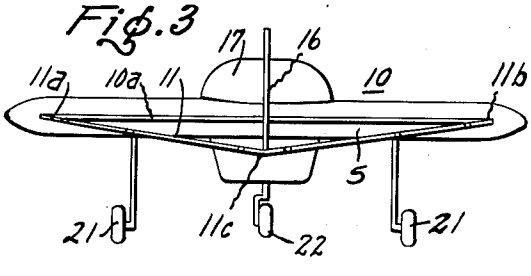

Fig. 6

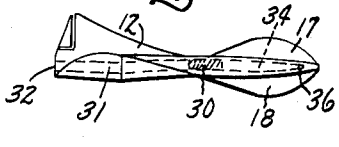

Inventor

Le Roy W Crookes

29 || @HighEarthOrbit_ linktr.ee/Grider2

United States Patent Office

2,730,312

Patented Jan. 10, 1956

1

2,730,312

DISCOID-SHAPED AIRCRAFT

Le Roy W. Crookes, Scotia, N. Y.

Application November 23, 1953, Serial No. 393,881

3 Claims. (Cl. 244—13)

This invention relates to aircraft, particularly of the heavier-than-air type, and one of the objects is to provide an improved discoid form of aircraft that will appear to be substantially circular in shape when viewed from the top or bottom and thus in flight appears as a "flying saucer."

Another object of the invention is to provide an improved flying saucer type of aircraft having a main air foil of truncated disc or discoid shape to provide a circular leading edge combined with a complementary trailing segmental dihedral horizontal stabilizer as well as an interconnecting vertical stabilizer in order to obtain inherent structural ruggedness, as well as inherent stability in flight, slower landing speeds, increased and more economical cruising speeds, and also to enable all the necessary structural members to be enclosed within the main air foil and stabilizer surfaces.

In a passenger carrying aircraft embodying the present invention, the engine and passengers' compartment may be partly or entirely closed within the main air foil surfaces depending upon the relative size and thickness of the main air foil of the aircraft which may be powered by a jet reciprocating engine driven propeller, or flown as a glider, but the improved form of aircraft may be built in any size from a small model glider or model-miniature engine driven craft up to a large transport capable of carrying maximum loads.

In each case the invention resides in the improved substantially truncated main disc or discoid air foil and the complementary trailing stabilizer structural combinations as set forth in the ensuing disclosure and having with the above other objects and advantages as hereinafter pointed out. The improved construction details and the manner of cooperation of the components will be made manifest in the following description of the illustrated embodiments; it being understood that modification, variation and adaptation may be resorted to within the scope, spirit and principle of the invention as it is claimed in conclusion hereof.

In the drawing, Fig. 1 is a plan view of a typical propreller driven two passenger-carrying "flying saucer" embodying the invention. Fig. 2 is a side elevation of the aircraft shown in Fig. 1. Fig. 3 is a rear elevation of the aircraft structure shown in Fig. 1. Fig. 4 is a partial sectional view along the lines 4—4 looking in the direction of the arrow in order to show more clearly the dihedral form of the segmental shaped horizontal stabilizer. Figs. 5 and 6 show a typical jet propelled form of the "flying saucer" embodying the improvements of the present invention.

In accordance with the principles of the present invention, the main flight or lifting air foil generally designated by the reference character **10** is made substantially of truncated disc or discoid shape to provide a circular leading edge and a linear trailing edge **10***a* as shown in Fig. 1 and preferably provided with a suitable peripheral taper at all of its edges as shown in Figs. 2 and 3 in order to increase the aerodynamic efficiency. The horizontal stabilizer indicated generally by the reference character **11** is shaped as a complementary trailing segment to the air foil **10** as shown in Fig. 1 and is of dihedral form as indicated in Figs. 3 and 4. The depressed or offset center **11***a* of the dihedral horizontal stabilizer **11** is joined to and supported by the bottom of the vertical stabilizer **12** that extends from the air foil **10** normal to the linear trailing edge **10***a* thereof. The dihedral surfaces of the segmental horizontal stabilizer are inclined so as to provide a negative angle of attack relative to the main air foil **10**. Thus with this dihedral construction the air can flow in normal level flight from the under side of the main air foil **10** to the upper side of the dihedral horizontal stabilizer **11**. The tips **11***a* and **11***b* thereof are joined to and firmly supported by the ends of the linear trailing edge **10***a* of the main air foil. Such improved construction gives the whole aircraft inherent ruggedness since the component elements cooperate to mutually reinforce each other. The ruggedness of the whole aircraft is further increased by the reinforced circular structural member **15** which circumferentially encloses substantially the entire main air foil **10** and extends therefrom so as to connect the tips **11***a* and **11***b* of the segmental horizontal stabilizer **11** to the ends of the linear trailing edge **10***a* of the main air foil **10**. The trailing edge of the horizontal stabilizer **11** is symmetrically notched so as to have inserted therein the relatively movable semi-segmental elevators **14***a*, **14***b* and the ailerons **13***a* and **13***b* that are used for controlling the path and attitude of the aircraft in flight and still provide an overall circular configuration.

In order to house passengers, a suitable canopy **17** may be provided on the upper side of the main wing **10**, and a suitable foot well **18** on the lower side so as to form an enclosed compartment as shown in Fig. 2 in case the wing **10** is of insufficient thickness to house the passengers completely therein. A suitable engine **19** may be enclosed within the center of the leading edge of the main wing **10** with the shaft extended to drive the propeller **20**. The landing gear may be of the conventional three-point type comprised of the two main wheels **21** and the nose wheel **22**.

The improved aircraft construction is inherently rugged due to the omission of long or thin air foil members and the fact that the whole outer periphery of the "flying saucer" is a reinforced continuous generally circular structural member except for the inserted ailerons and elevators. The dihedral or V shape of the horizontal stabilizer **11**, as viewed from the back in Fig. 3 inherently adds rigidity to the vertical stabilizer **12** and vice versa and also inherently forms a laterally tapered air slot generally indicated as *s* in Figs. 3 and 4 that gives each stabilizer as well as the other control elements carried thereby a fresh supply of air to insure more accurate and better control under adverse flying conditions.

When built the 18-foot diameter improved "flying saucer" becomes equivalent to the standard light personal plane of today. Both may be powered with a 65 to 125 H. P. engine. Both will carry two to four people. The standard airplane requires a wing span of approximately 36 feet, while in comparison the "flying saucer" requires only an 18-foot wing span but provides 50 percent more effective wing area. This enables the improved craft to land at a slower speed in areas which would otherwise be inaccessible to the usual craft of today. Typical details of construction suitable for an 18-foot diameter "flying saucer" of the improved form shown in Figs. 1, 2, 3 and 4 may be as follows.

Practically the entire outer edge of the ship may be formed of a strong continuous aluminum tube **15** formed into substantially circular shape so as to extend entirely around the leading edge of the main air foil **10** and back to the ailerons **13***a* and **13***b*. Preferably a pair of main ribs **24***a* and **24***b* are extended perpendicularly

30 || @HighEarthOrbit_ linktr.ee/Grider2

from the linear trailing edge **10***a* of the main air foil **10** on either side of the passenger compartment as indicated in Fig. 1.

The main ribs **24** are preferably formed of light aluminum tubing suitably curved into an air foil shape as shown in Fig. 2 and are reinforced in the usual way with cross braces of aluminum tubing. The engine bulkhead **25** is mounted between these two main ribs. The pair of main spars **26***a* and **26***b* are made of aluminum bridge type construction. One spar **26***a* preferably is located as shown in Fig. 1 at the transverse diameter of the discoid main air foil **10** which is perpendicular to the line of flight and parallel to the linear trailing edge **10***a* thereof. The other spar **26***b* preferably is located immediately in back of the passenger compartment. From this spar **26***b* the main landing gear is mounted. The trailing edge **10***a* of the main lifting air foil **10** preferably is formed by a linear triangularly shaped aluminum beam **26***c*. The main air foil **10** may be covered with suitable fabric or thin aluminum sheet except the area next to the cockpit which is covered with reinforced aluminum so it can be used as a catwalk. The foot well **18** preferably is made of aluminum tubing covered with fabric. The floor boards inside of the foot well may be made of corrugated aluminum. The canopy **17** preferably is made of transparent molded plastic with the central section movable for the entrance of the passengers. Preferably there are also the plastic glass windows **23** in the lateral surfaces of the foot well **18** to provide increased visibility. These are shown in Fig. 2 and indicated as **23**.

The main landing wheel gear **21** is mounted to the forward main spar **26***b* and the shock absorber is mounted to the aft main spar **26***a*. The nose wheel gear **22** may be mounted to the engine bulkhead **25**. The landing gear may be of the stationary or retractable type.

The vertical stabilizer **12** is made of aluminum tubing and joined securely to the spars **26***a* and **26***c*. The base of this stabilizer **12** at the trailing edge **10** of the main air foil is approximately 1½ feet below the trailing edge **10***a* and is formed approximately at a 3-degree negative angle of attack so as to support the depressed or offset center **11***a* of the horizontal dihedral stabilizer **11** of segmental form. As previously pointed out, this construction enables the vertical stabilizer to reinforce the horizontal stabilizer and vice versa. Each stabilizer preferably is fabric covered. The rudder **16** carried by the vertical stabilizer **12** may be made of aluminum tubing and fabric covered. The dihedral and segmental horizontal stabilizer **11** is made of aluminum tubing and fabric covered and the depressed center **11***c* of this stabilizer mounts rigidly to the base of the vertical stabilizer **12**. With the tips **11***a* and **11***b* of the horizontal stabilizer mounted to the ends of the linear trailing edge of the main air foil **10**, the dihedral surfaces of the horizontal stabilizers **11** are therefore mounted at approximately a 15-degree angle to each other.

When built in accordance with the principles of the present invention, the improved "flying saucer" will land in a shorter and smaller area than conventional craft of today, has a lower landing speed, requires less takeoff run, is more economical at cruising altitudes, and is virtually stall, spin and ground loop proof.

In the jet propelled form of flying saucer shown in Figs. 5 and 6, the main air foil **10** and the trailing horizontal stabilizer **11** and the vertical stabilizer **12** have the same aerodynamic relations as previously described, but their internal construction is slightly modified. Thus the jet engine **30** is enclosed within the main air foil **10** behind the passenger compartment formed by the canopy **17** and the foot well **18**, and is provided with a tail pipe **31** that extends aft through the lower part of the vertical stabilizer **12** so that the propelling jet may be exhausted at **32** between the elevators **14***a* and **14***b* in substantial alignment with the flight axis of the aircraft. Combustion air is supplied to the jet engine **30** through forked air passages **33** and **34** that extend inside of the main air foil **10** on opposite sides of the passenger compartment, and are provided with the air inlet openings **35** and **36** located adjacent the leading circular edge of the main air foil **10**.

What I claim as new and desire to secure by Letters Patent of the United States, is:

1. An aircraft having in combination, a main air foil of truncated discoid planform to provide a circular leading edge, a trailing horizontal stabilizer of complementary trailing segmental form having the tips thereof joined to the ends of the trailing edge of the main air foil and having the center thereof depressed from the trailing edge of the main air foil, and a vertical stabilizer extending substantially diametrically from the main air foil midway of the trailing edge thereof to support the depressed center of the horizontal stabilizer.

2. An aircraft having in combination, a main air foil of substantially truncated discoid planform to provide a circular tapered leading edge and a linear tapered trailing edge, a complementary trailing segmental horizontal stabilizer of dihedral form having the tips thereof joining and supported by the ends of the linear trailing edge of the main air foil to offset the center thereof from the linear trailing edge of the main air foil, and a vertical stabilizer extending diametrically from the main air foil normally midway of the linear trailing edge thereof to support the offset center of the dihedral horizontal stabilizer.

3. An aircraft having in combination, a main air foil of substantially truncated discoid planform having a substantially linear trailing edge and provided with spaced beams extending perpendicular to the trailing edge and transverse spars extending parallel with the trailing edge and having a circular edge supporting member joined to the ends of the beams and spars and extending beyond the trailing edge of the main air foil, a complementary segmental horizontal stabilizer of dihedral form having the tips thereof supported by the extended ends of the circular edge supporting member of the main air foil and having the center of the dihedral offset from the linear trailing edge of the main air foil, and a vertical stabilizer mounted on the spars to extend substantially diametrically from the main air foil midway of the linear trailing edge thereof to support the offset center of the dihedral horizontal stabilizer.

References Cited in the file of this patent

UNITED STATES PATENTS

1,523,994	Myers	Jan. 20, 1925
1,887,411	Johnson	Nov. 8, 1932
1,981,700	Hoffman	Nov. 20, 1934

FOREIGN PATENTS

5,282	Great Britain	of 1912
2,421	Great Britain	of 1914

Nov. 20, 1951 N. C. PRICE 2,575,682

REACTION PROPULSION AIRCRAFT POWER PLANT HAVING INDEPENDENTLY ROTATING COMPRESSOR AND TURBINE BLADING STAGES

Filed Feb. 14, 1944 2 SHEETS—SHEET 1

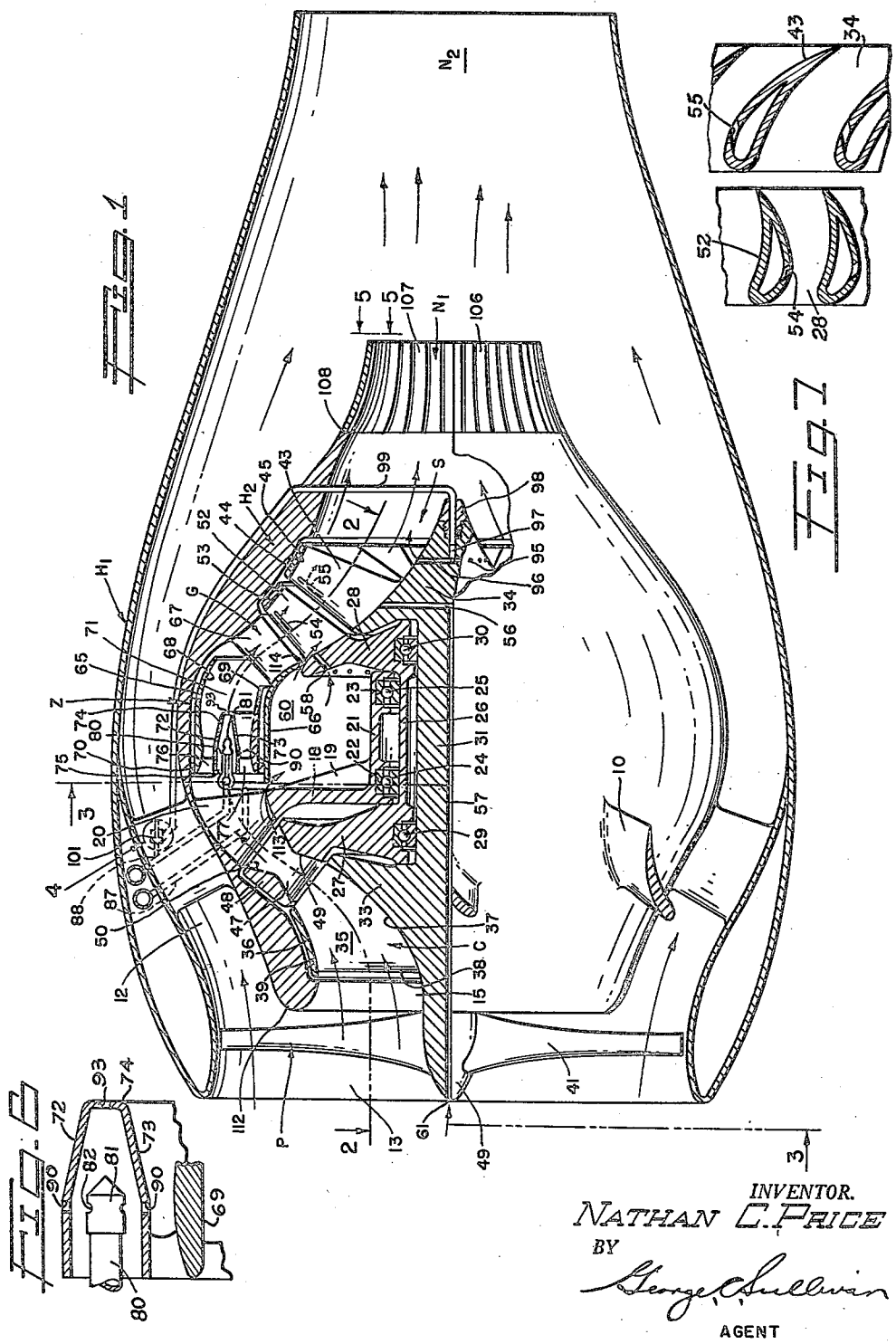

FIG. 1

FIG. 7

FIG. 2

INVENTOR.
NATHAN C. PRICE
BY
George C. Sullivan
AGENT

Nov. 20, 1951 N. C. PRICE 2,575,682
REACTION PROPULSION AIRCRAFT POWER PLANT
HAVING INDEPENDENTLY ROTATING COMPRESSOR
AND TURBINE BLADING STAGES
Filed Feb. 14, 1944 2 SHEETS—SHEET 2

FIG. 2

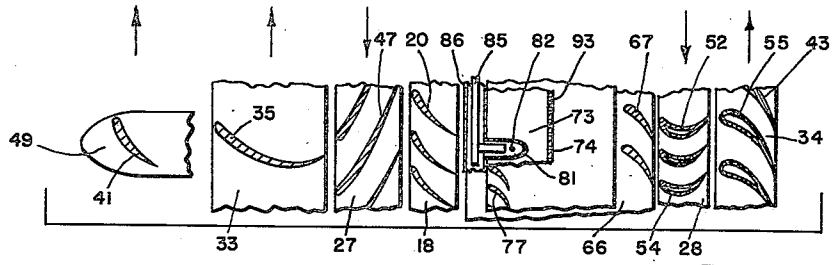

FIG. 3

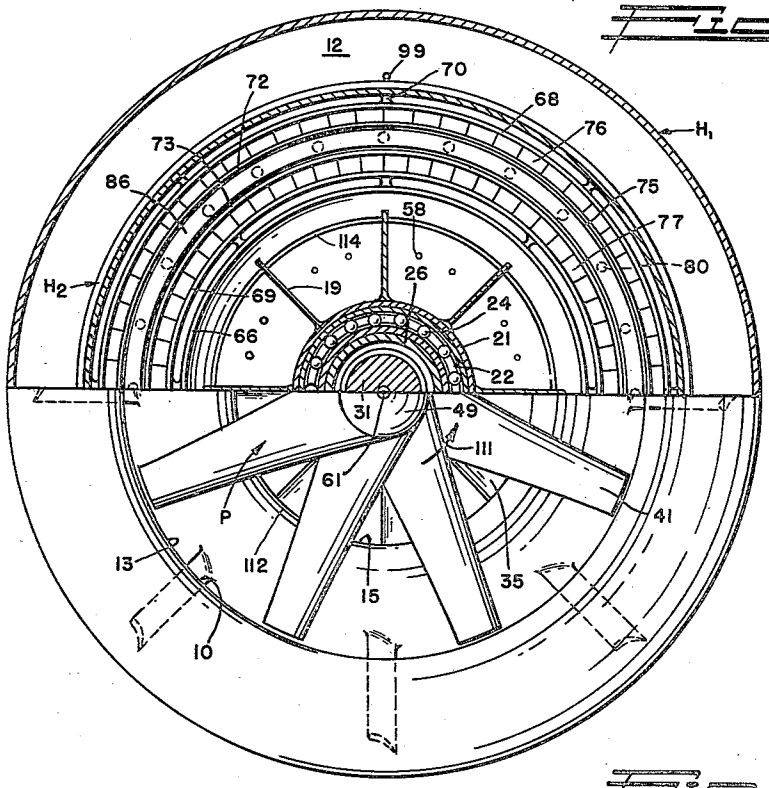

FIG. 4

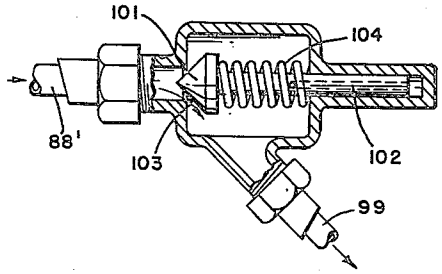

FIG. 5

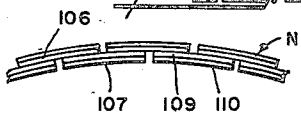

INVENTOR.
NATHAN C. PRICE
BY
George C. Sullivan
AGENT

33 || @HighEarthOrbit_ linktr.ee/Grider2

Patented Nov. 20, 1951 2,575,682

UNITED STATES PATENT OFFICE

2,575,682

REACTION PROPULSION AIRCRAFT POWER PLANT HAVING INDEPENDENTLY ROTATING COMPRESSOR AND TURBINE BLADING STAGES

Nathan C. Price, Hollywood, Calif., assignor to Lockheed Aircraft Corporation, Burbank, Calif.

Application February 14, 1944, Serial No. 522,343

6 Claims. (Cl. 60—35.6)

1

This invention relates to prime movers of the fluid reaction type in general, and more particularly to the internal combustion-reaction types of engines which function in accordance with the principal and in the manner commonly known as "jet propulsion."

This invention may be adapted to numerous uses but finds its principal application in prime movers for propelling aircraft and the like high velocity vehicles, particularly for airplanes of medium weight and medium high speed. It also brings into the realm of feasibility the installation of jet power in aircraft which travel at relatively low speed, without entailing the loss of efficiency and the attendant cruising range limitations which have been heretofore predicted for jet propulsion under such conditions.

It is an object of this invention to provide a propulsion unit which does not possess the efficiency and space requirement limitations inherent in the conventional propeller drive apparatus and which, at the same time, does not suffer limitations as a result of operation of the aircraft at medium speeds or through a large range of speeds.

It is a further object of this invention to provide a gas turbine and compressor combination of improved design wherein increased thermal efficiency and mechanical simplification is accomplished with attendant reduction of weight.

It is also an object of this invention to provide a fluid jet propulsion unit which embodies high internal thermodynamic and mechanical efficiency combined with low jet wake losses for medium high speed or lower speed aircraft, in order to improve airplane performance and to increase the range of operation.

The objects of this invention are attained in general by providing a power plant which produces propulsive force and work wholly or in part by means of the reaction of a medium velocity expansible fluid jet of relatively large weight flow. The attainment of the objects and advantages of this invention are realized in part by an improved design of the turbo-supercharger combination wherein each of the plurality of compressor stages is individually and independently driven from each of the plurality of turbine stages resulting in improved thermal and mechanical efficiency and weight reducing simplification of the mechanical components.

The object of the invention is also attained by a supercharger compressor rotor designed for increased efficiency, particularly at supersonic fluid velocities.

2

These and other objects and features of novelty will become evident hereinafter in the description which together with the following drawings illustrate preferred embodiments of the invention.

Figure 1 is a longitudinal sectional elevation of th power plant assembly.

Figure 2 is a fragmentary, longitudinal sectional view of irregular path taken on line 2—2 of Figure 1.

Figure 3 is a frontal view of the power plant, part in section and part in elevation, taken on line 3—3 of Figure 1.

Figure 4 is an enlarged detailed view of the valve shown at 4 in Figure 1.

Figure 5 is an enlarged, fragmentary, rear elevation of the nozzle taken on line 5—5 of Figure 1.

Figure 6 is an enlarged fragmentary sectional view of the fuel nozzle means of the combustion chamber.

Figure 7 is an enlarged sectional view of two adjacent turbine blades.

Referring now to the drawings, in which like reference numerals refer to corresponding parts throughout the several figures, the apparatus of the invention is as follows:

The power plant assembly, as shown in the drawings, comprises nine main components: namely, an outer streamlined housing H_1, an inner streamlined housing H_2 supported substantially concentrically within the outer housing, and in the inner housing a counter-rotation, mixed axial and radial flow turbo-compressor C, a counter-rotational mixed axial and radial flow gas turbine G, an annular combustion chamber Z interconnecting the compressor and the turbine, a secondary combustion zone S, a primary discharge nozzle N_1, secondary propulsion nozzle outlet N_2, and an induction propeller P.

The inner streamlined housing H_2 which contains the principal components of the apparatus is, as before stated, concentrically supported within the outer tubular housing H_1 by means of a plurality of interconnecting streamlined struts or vanes 10 to form between said outer housing H_1 and inner housing H_2 a subtantially annular shaped passageway 12 of convergent-divergent cross-sectional area. The outer hollow streamlined housing H_1 is provided with a forwardly directed inlet opening 13 and a contracted rearwardly directed outlet or nozzle N_2. This housing may be fabricated from formed "Durolumin" or stainless steel sheet. The inner streamlined housing H_2 is similarly provided with a forwardly directed inlet 15 and a rear-

34 || @HighEarthOrbit_ linktr.ee/Grider2

wardly directed discharge nozzle N_1, said rearwardly directed nozzle N_1 being positioned coaxially within and adjacent to the outlet N_2 of the outer housing H_1, the two nozzles, in operation, functioning as a nozzle and augmenter respectively. The forward portion of housing H_2 may be cast "Duralumin" and the rear portion cast heat resistant alloy steel.

Within the inner streamlined housing H_2, a structure is provided for rotationally supporting the interconnecting drive shafts of the compressor and turbine, said compressor and turbine being more fully described hereinafter. The inner supporting structure comprises a longitudinal disc or diaphragm member 18 having a plurality of radially extending stiffening webs 19. The diaphragm 18 is supported at its outer periphery by means of a plurality of radial vanes 20 which form the stationary or static discharge diffusion nozzle ring portion of the compressor C, hereinafter more fully described, which vanes are in turn attached at their outer extremities to the inner housing wall structure adjacent the zone of the inner termination points of the beforementioned supporting vanes 10. The inner diaphragm 18 is thus supported from the outer housing by means of the supporting vanes 10 and the compressor discharge nozzle vanes 20. The inner or central portion of the diaphragm 18 and webs 19 carry a coaxially positioned tubular shaped bearing supporting member and shaft housing 21 having a pair of longitudinally spaced annular recesses 22 and 23 adapted to retain a pair of suitable bearings such as the radial ball bearings shown at 24 and 25. Plain or slipper types of segmental bearings may be optionally employed.

Concentrically positioned within the tubular shaft housing 21 and rotatably supported within the beforementioned radial ball bearings 24 and 25 is a tubular shaft 26 which interconnects a compressor rotor 27 and a turbine rotor 28. At the forward and rearward end portions of the shaft 26, within the rotors 27 and 28, is another pair of suitable bearings, such as the radial ball bearings shown at 29 and 30 which in turn carry a centrally positioned shaft 31 which serves to interconnect the compressor rotor 33 and the turbine rotor 34. The first stage compressor rotor 33 and the final stage turbine rotor 34 are thus independently interconnected by the said central shaft 31 which is centrally positioned and rotatably journaled within the tubular shaft 26 upon the beforementioned bearings 29 and 30, and the tubular shaft 26 interconnecting the second stage compressor rotor 27 with the first stage turbine rotor 28 is in turn concentrically journaled and supported for independent rotation within the supporting bearings 24 and 25 within the housing 21.

On the forward end portion of the central shaft 31, as before mentioned, is located the first stage compressor rotor 33 of approximately conical shape and carrying a plurality of radially extending airfoil shaped impeller vanes 35 terminating at their outer tip ends in a curved enclosing ring or shroud 36. The inner opposite curved surfaces 37 of the impeller rotor 33 and the shroud 36 are shaped as shown to have a forwardly directed, axial inlet opening 38 registering with the housing inlet opening 15 leading to the impeller blades 35 and to form a following mixed axial and radial flow passage therebetween which discharges into the second

counter-rotating stage. The curved shroud 36 rotates with the impeller blades to which it is attached, within a curved annular recess 39 provided in the inside surface of the forward end portion of the beforementioned inner streamlined housing H_2. On a forward extension of the shaft 31 and the rotor 33 a hub 49 is formed and adapted to carry a plurality of radially extending airfoil sectioned impeller blades 41 which constitute the induction blower or propellel P. On the rearward end portion of the central shaft 31, as beforementioned, is located a conical shaped turbine rotor 34 which carries a plurality of radially extending airfoil shaped turbine impeller blades 43 terminating in an annular ring or shroud member 44 which rotates within an annular recess 45 formed in the inside surface of the rear portion of the streamlined housing H_2. The turbine rotors may be constructed of heat resistant chromium-nickel-iron alloy and the turbine impeller blades of heat resistant tungsten-cobalt-chromium alloy.

The beforementioned second stage compressor rotor 27 located on the forward end of the tubular shaft 26 carries on its outer periphery a plurality of curved impeller vanes 47 which extend radially intermediate the said rotor 27 and a ring shroud member 48 which rotates adjacent the first stage shroud 36 within an extension of the recess 39. The outer surface 49 of the rotor 27 and the inner surface 50 of the shroud 48 form a fluid flow passage with a convergent inlet and a divergent outlet which results in a contraction or throat section having the appearance of a venturi as viewed in the longitudinal cross-section shown in Figure 1. This Venturi shaped passage containing the radially inter-extending impeller or diffuser blades which are set at low angles of incidence with respect to the direction of rotation and with respect to the entering fluid, as best shown in Figure 2, constitutes, in operation, a counter-rotating supersonic diffuser.

The diffuser and rotor 27 should in most cases be constructed of heat treated steel, rather than the light metals used in conventional superchargers, because the pressure ratio and resultant temperature ratio developed are much higher, which might result in creep difficulties in light metals.

On the rear end portion of the tubular shaft 26 is located the beforementioned first stage turbine rotor 28 which carries a plurality of radially extending airfoil shaped impeller blades 52 terminating at their outer tip portions in an annular shroud member 53 which is adapted to rotate with the blades within the beforementioned recess 45.

The first and second stage turbine impeller blades 52 and 43 are hollow and are provided with slits 54 and 55 opening from the interior of the blades to the outer convex or anti-lift surfaces thereof at points preferably adjacent the tips and near the leading edges, the slots being formed in general in accordance with that shown and described in my copending application Serial No. 488,029, now Patent No. 2,468,461, issued April 26, 1949. Suitable radial cooling air passages 56 connecting with the interior hollows of each of the blades 43 are provided in the rotor 34 making connection centrally with a bore passage 57 leading axially through the central shaft 31 to an inlet opening 61 in the forward tip of the hub 49. Similar passages of shorter length are provided through the outer peripheral portion of the turbine rotor 28 as shown at 58 which lead

35 || @HighEarthOrbit_ linktr.ee/Grider2

into the interior hollows of each of the first stage turbine impeller blades 52. The passages 58 make connection with the interior cavity 60 of the unit adjacent the supporting diaphragm 18 and inside of the inner wall of the combustion chamber.

An annular shaped combustion chamber Z formed between the inner surface 65 of an intermediate section of the housing H_2 and an inner concentric annular wall member 66, is located between the compressor and the turbine and serves to interconnect them. The said inner wall member 66 of the combustion chamber is supported at its rearward, inwardly curved end at the discharge end of the combustion chamber by means of the plurality of semi-radially and axially positioned curved vanes 67 which constitute the turbine inlet nozzle. The nozzle vanes 67 have a sloping entrance angle parallel to the swirl angle of the combustion chamber gases to receive these gases without shock, and terminate at an exit angle of about 13° from the tangent. A small radial gap or slot 113 is formed between the forward end of partition 66 and the diaphragm 18 interconnecting the entrance of the combustion chamber with the cavity 60 for passage of cooling air as hereinafter more fully described. Within the combustion chamber Z are a pair of concentrically positioned annular shroud members 68 and 69, both preferably fabricated from a heat resistant material such as nickel-chromium-iron alloy, spaced a short distance from the walls 65 and 66 respectively to form narrow, annular air passages therebetween and to enclose a combustion zone 71. The combustion chamber Z into which the compressor discharges through diffuser vanes 20 is thus an approximately annular shaped space, curved inwardly and of slightly diminished average diameter towards its outlet end and defined on the outside by the beforementioned inner surface 65 of the intermediate portion of the housing H_2 and on the inside by the concentric, substantially annular shaped partition or wall 66. The combustion chamber Z converges slightly at the rear portion to the annular nozzle forming an outlet passage of reduced and restricted area and containing in the portion of reduced area the nozzle ring structure containing the beforementioned plurality of circumferentially spaced radially positioned airfoil shaped vanes 67.

The beforementioned inner and outer annular shroud members 68 and 69 are supported from the outer surface 65 of the combustion chamber Z by means of a plurality of circumferentially spaced positioning lugs or struts shown in Figures 1 and 3 at 70. Within the forward portion of the combustion zone centrally located between the shroud members 68 and 69 is a relatively short annular member formed with two concerging walls 72 and 73 joined in an apex at the rearward edge at 74 and opening forwardly as shown at 75 to form a fuel spray nozzle housing. The said walls 72 and 73 of the fuel nozzle housing are supported between and join the inner forward surfaces of the shrouds 68 and 69 by means of inner and outer concentric sets of a plurality of circumferentially interconnecting swirl vanes 76 and 77. The swirl vanes have an exit angle of about 25° to the tangent. Two vaned concentric annular inlet passages are thus formed at the entrance of the combustion zone on either side of the fuel nozzle housing 72—73 between the shrouds 68 and 69 which are adapted to impart a spiral flow to fluid flowing through the combustion zone.

A plurality of fuel spray jets 80 extend into the forwardly opening portion of the central annular nozzle housing formed between the beforementioned converging walls 72 and 73 and each spray jet carries at the inner end a spray head 81 provided with a pair of laterally directed orifices 82. Each said spray head is supported by and adapted to be supplied with a mixture of liquid fuel and injection air by means of a pair of concentric pipe nipples which make connection with concentrically arranged circular pipe manifolds 85 and 86 contained within the forward end of the combustion chamber. The exterior circular manifold 86 is adapted to be supplied with air under suitable pressure through a lead-in pipe 87 and the interior manifold 85 is adapted to be supplied with liquid fuel under pressure through a lead-in pipe 88. The lead-in or supply pipes 87 and 88 may enter the inner housing from suitable sources of supply under pressure through one or more of the supporting vanes or struts 10.

The beforementioned converging walls 72 and 73 of the nozzle housing between which the fuel spray jets extend, are provided with apertures 90 registering with each of the beforementioned laterally directed jet head orifices 82 whereby an atomized mixture of fuel and air may be projected laterally into the adjacent space in the contracted portion of the Venturi shaped air passages which lead into the combustion zone 71. A plurality of perforations 93 are provided in the apex 74 of the nozzle housing 72—73 for flow therethrough of a relatively small quantity of cooling air.

A plurality of apertures are provided in the gas turbine rotor 34 as shown at 95 for the introduction of a spray of supplementary fuel into the turbine exhaust passage. The orifices 95 are adapted to be fed with fuel through a plurality of lateral ducts 96 which extend radially from a central bore 97 in the tail portion of the central shaft and rotor 34 which in turn makes connection through a suitable stuffing box 98 with a fuel supply pipe 99. The fuel supply pipe 99 is connected to a branch fitting on the beforementioned main fuel line 88 through a spring loaded valve as indicated at 4 in Figure 1 and best shown in detail in Figure 4. The spring loaded valve comprises a conical valve member 101 slidably supported upon a stem 102 and urged into a closed position against beveled seat 103 by means of a coil spring 104. The valve is thus normally maintained closed against fluid pressure in pipe 88'. Upon application of pressure to pipe 88 and 88' above a predetermined maximum, the pressure acting against the face of the valve 101 causes it to open against the force of the spring 104 allowing fuel to flow through pipe 99 to the supplementary fuel injection spray orifices 95.

At the rear or trailing portion of the inner housing H_2 is a nozzle structure N_1 formed by a plurality of overlapping bi-metal leaves as best shown in Figure 5 at 106 and 107. The forward end of the bi-metal leaves are rigidly attached in a suitable manner such as by riveting or welding to the housing H_2 at 108. The rearward ends of the leaves are free to move outwardly to increase or inwardly to decrease the area of the nozzle opening in accordance with the differential expansion and contraction of the surfaces of the bi-metal leaves. Each nozzle leaf is constructed of two superimposed laminations 109 and 110 joined face to face as shown. The joined laminations in each leaf are composed of different

36 || @HighEarthOrbit_ linktr.ee/Grider2

kinds of metal alloys having widely different coefficients of expansion, such as, for example, high expansion 18% chromium 8% nickel steel in lamination 110, and low expansion 25% chromium 12% nickel steel in lamination 109. The first alloy steel has an expansion approximately twice that of the latter. The nozzle just described is claimed in my copending divisional application Serial No. 602,289 filed June 29, 1945, now Patent No. 2,563,270.

The operation is as follows:

The propeller P which may be 18" in diameter, in a representative case, and the initial stage compressor rotor 33 and vanes 35 are driven during rated power operation at approximately 10,500 R. P. M., for example, in a counter-clockwise direction as indicated by arrow 111 as viewed from the forward end in Figure 3. The said propeller P and rotor 33 are driven through the central shaft 31 by the last stage of the gas tubine which comprises the rotor 34 and impeller blades 43. The propeller thus operated is capable of inducting approximately 45 lbs. of air per second at sea level with a pressure rise ratio exceeding approximately 1.12 to 1.0. The second stage of the compressor comprising the rotor 27 and the impeller diffuser vanes 47 is ordinarily driven at approximately 22,000 R. P. M. for example, in a clockwise direction, counter to that of the beforementioned first compressor stage, through the concentric tubular shaft 26 by the first stage of the gas turbine comprising the rotor 28 and im-impeller blades 52. The specified rotative speeds will vary to some extent, depending on conditions imposed upon the power plant, as will be later described. In operation in an aircraft moving at high velocity, rammed air enters the forward opening 13 of the unit under pressure or if the unit is moving at lower velocities or is stationary, air is drawn into the forward opening 13 by means of the propeller P where the stream is initially divided by the leading edge 112 of the inner housing H_2. A portion of the air flows outside of the inner housing through the annular space 12 formed between the inner and outer housings H_1 and H_2 and thence rearwardly to be finally discharged from the outlet N_2 together with comingled combustion gases, as hereinafter more fully described. The other portion of the divided air entering the forward end of the unit passes into the opening 15 and into the first stage 35 of the compressor C. Air discharged from the first stage 35 of the compressor passes into the counter-rotating converging-diverging diffuser rotor section 47 and thence through the stationary or static diffuser vanes 20 into the forward entrance end of the combustion chamber Z at a pressure of approximately 105 pounds per square inch absolute, at sea level.

Under normal operation the convergent domain of the diffuser receives air at supersonic velocity relative thereto of approximately 1800 feet per second for example, such air being compressed by the reduction of the free passage area in the direction of flow. The air reaching the diffuser throat is raised in pressure by the preceeding convergent domain, to such an extent that the relative velocity of the air leaving it has been lowered to the velocity of sound. Thus beyond the diffuser throat, in the divergent portion, further diffusion and consequent increase of air pressure proceeds at sub-sonic relative velocity.

The air thus compressed is discharged into the combustion chamber and is again divided several ways, a major portion flowing through the two concentric annular inlet passageways containing the swirl vanes 76 and 77 formed between the shrouds 68 and 69 and located on either side of the fuel spray nozzle housing 72—73 and thence through the Venturi shaped passageway into the combustion zone 71. Another portion of the air passes between the combustion zone shrouds 68 and 69 and the combustion zone walls 65 and 66 for cooling. Still another minor portion of the air passes around the manifold piping 86 and through the converging passageway formed within the spray nozzle housing 72—73 and thence through perforations 93 into the combustion zone 70. A small quantity of air escapes inwardly through the slot 113 into the inner cavity 60 for cooling of the internal structure and the turbine rotor and blades, as hereinafter described. Liquid fuel such as, for example, gasoline, kerosene, or the like, introduced into pipe 88 under pressure from a suitable source not shown, issues from the orifices 82 together with atomizing air introduced into pipe 87 under pressure and passes laterally out through apertures 90 in the form of a spray into the beforementioned Venturi shaped air passages where it meets and mixes with the flowing air stream, and the resulting fuel-air mixture passes onward into the combustion zone 70 where combustion takes place. Combustion may be initiated by a spark plug or glow plug in the manner described in my said Patent No. 2,468,461. The swirl vanes 76 and 77 at the entrance to the venturi shaped air passages leading to the combustion zone 71 impart a spiral flow pattern to the burning atomized fuel-air mixture flowing through the annular space of the combustion zone. A more thorough mixing of the fuel and combustion air is thus effected by the added turbulence of the spiral flow and at the same time the effective length of the combustion chamber is increased by the greater length of the spiral combustion flame the combustion zone is thereby able to accommodate. This permits, in effect, a shorter length of combustion chamber for a given degree of mixing and heat generating capacity than would otherwise be possible.

The resultant heated products of combustion and excess air under the combustion zone pressure of about 105 pounds per square inch absolute are discharged through the outlet nozzle formed between the nozzle vanes 67 and thence pass into the expansion zone of the gas turbine where counter-rotative impulsion is given to the two rows of impeller blades 52 and 43. The partially expanded gases exhausted from the gas turbine are finally discharged in the form of a jet through the variable opening nozzle N_1 where they comingle with and give impulse to the beforementioned air flowing rearwardly through the annular passage 12 between the inner and outer housing. The comingled discharged gases and air are finally discharged rearwardly through the outlet nozzle N_2 in the form of a reactive jet. When added thrust or increased power is desired an increase in the fuel pressure in the supply pipe 88 above a predetermined value results in the opening of the spring loaded valve 101 to allow fuel to flow through pipe 99, stuffing-box 98 and thence through lateral ducts 96 in the turbine rotor 34 leading to the orifices 95 to spray fuel into the gases exhausted from the gas turbine and flowing through the secondary combustion one S. Combustion of the supplementary fuel thus sprayed into the discharged gases containing excess unconsumed oxygen, from the

37 || @HighEarthOrbit_ linktr.ee/Grider2

turbine results in augmented velocity and increased temperature of gases passing out through the nozzle N_1. The resultant increase in the temperature of the gases passing through the nozzle N_1 causes the bi-metal leaves 106—107 to bend outwardly by the combined pressure and differential thermal expansion effect, to cause an increase in the diameter and area of the nozzle opening. This increase in nozzle area automatically accommodates the increased gas volume without increased back pressure on the turbine, which would otherwise result in drop in rotative speed, and the consequent diminishing of the available thrust from the plant.

As beforementioned, a portion of the compressed air discharged from the compressor C into the entrance of the combustion chamber Z, escapes through an annular slot 113 leading into the cavity 60 surrounding the shaft 21 and defined by the combustion chamber wall 66, and from there escapes through the plurality of passages 58 leading through the rotor into the hollows of the first stage turbine impeller blades 52 for cooling, and finally the air passes out from the blades 52 through the boundary layer control slots 54 and into the combustion gases passing through the turbine expansion zone. Another portion of the air escapes from the cavity 60 through the annular passage 114 formed between the forward edge of the turbine rotor 28 and the lower discharge lip of the turbine inlet nozzle and passes into the expansion zone of the gas turbine in the form of a relatively thin boundary layer which flows along the surfaces of the gas turbine rotors 28 and 34 and finally comingles with the gases discharged from the gas turbine through the nozzle N_1. Cooling air also enters the hollows of blades 43 of the second stage of the gas turbine by way of the shaft bore 57 and the lateral passages 56 in the rotor 34. Air thus entering the blades 43 is discharged through the slots 55 in the manner before described in connection with the turbine impeller blades 52. Circulation of the air into the impeller blades 43 is induced in part by the ramming effect of the air meeting the entrance 61 of the bore 57 when the unit is in motion and also by reason of the centrifugal force action upon the bodies of air in the lateral passages 56 and in the hollow blades 43, when they are rotating at high speed.

The propeller P inducts into the unit and causes ejection of a large reactive mass flow of comingled combustion gases and air from the nozzle N_2, thereby increasing the performance of the unit by providing a resultant large jet thrust. The additional load imposed upon the last stage turbine impeller blades 43 by the propeller P requires the gas turbine to operate with a relatively low back pressure, which proportionately avoids excessive jet wake losses from the nozzle N_1.

The internal efficiency of the unit is benefited by utilization of a counter-rotation turbo-compressor mechanism comprising a principal part of the unit, which while simple and compact provides adequate ratios of compression in the compressor or supercharger and also subsequent large expansion in the gas turbine as compared to conventional turbo-compressor machines.

The counter-rotation elements of the turbo mechanisms are adapted to operate at a very high relative velocity (approximately 1,800 feet per second) with respect to each other without entailing the structural difficulties associated with the usual high rotational speeds heretofore required. High energy interchange in a small space is thus made possible since supersonic relative velocity thus exists between these elements, and the attainable ratios of compression or expansion under supersonic flow are very high compared to sub-sonic operation. In both compressor and turbine, a high rate of energy interchange is achieved with a minimum number of stages by virtue of high relative velocity between counter-rotating elements, whence the total surface area of the aerodynamic surfaces therein is less and the boundary layer frictional losses are therefore less.

The additional fuel injection at the orifices 95 in the turbine exhaust stream provides for increased thrust to be used during takeoff or for a sudden burst of power. The flow area of the propulsive nozzle N_1 is automatically adjustable to prevent variations in thermal conditions in the secondary combustion chamber S between the turbine and nozzle N_1 as a result of supplementary fuel injection or other causes, from interfering with the proper degree of expansion of gas through the turbine which is necessary to drive the supercharger-compressor C and propeller P.

The nozzle N_1 spouts combustion gases at a velocity which is considerably higher than the average resultant velocity of the mixed air and combustion gases finally issuing from nozzle N_2. A jet augmentation effect is thereby produced by the action of the jet of gases issuing from nozzle N_1 acting upon the inducted air stream flowing from the propeller P between the housings H_1 and H_2 toward the nozzle N_2 which results in an increase in the overall thrust developed in the unit.

The compressor and turbine counter-rotation stages embodied in the jet propulsion unit are so interconnected by drive shafts 31 and 26 that any variations in airplane speed, altitude, or atmospheric temperature, will automatically result in optimum compensation of the ratio of relative rotative speed of each stage to produce the highest internal and propulsive efficiency of the power plant in the presence of such external variable conditions.

With such arrangement the design ratio of entrained volumetric flow to vane rotational speed in each stage of the compressor and turbine tend to remain most constant under the influence of variable atmospheric conditions imposed upon the power plant, and individual stages of the compressor and turbine are not forced by mechanical connection to other stages to operate at incorrect angles of incidence with the passing fluid.

It is to be understood that the foregoing is not to be limiting but may include any and all forms of apparatus which are included within the scope of the claims.

I claim:

1. In a gas reaction propulsive unit, apparatus comprising in combination, a housing having a forward opening for the entrance of air and a rearward opening for discharging gases at high velocity, a turbo-compressor in said housing in communication with said forward opening and having a plurality of immediately adjacent independently counter-rotatable impeller blades, a gas turbine in said housing having a plurality of independently immediately adjacent counter-rotatable rows of impeller blades, a combustion chamber in the housing between said pluralities of adjacent blades, a plurality of concentric drive

38 || @HighEarthOrbit_ linktr.ee/Grider2

shafts coupling said rows of turbine impeller blades with said rows of compressor impeller blades, and cantilever support means between said pluralities of adjacent blades and in approximately the same radial plane as the combustion chamber for supporting said shafts in the housing, and means to discharge gases exhausted from said turbine in a propulsive jet through said rearward opening.

2. In a gas reaction propulsive unit, apparatus comprising in combination, a housing having a forward opening for the entrance of rammed air and a rearwardly directed nozzle for discharging gases at high velocity, a turbo-compressor in said housing in communication with said forward opening and having a plurality of independently counter-rotatable rows of impeller blades, a gas turbine in said housing having a plurality of independently counter-rotatable rows of impeller blades, a combustion chamber in said housing between the turbo-compressor and the turbine, a plurality of concentric drive shafts coupling individual rows of said turbine impeller blades with individual rows of said compressor impeller blades, and a shaft support cantilivered at its forward end from the housing and supporting said shafts in a zone intermediate the turbo-compressor and turbine and forming the sole support for the shafts and means to discharge gases exhausted from said turbine in a propulsive jet through said nozzle.

3. In a gas reaction propulsive unit, apparatus comprising in combination, a housing having a forward axial opening for the entrance of rammed air, and a rearwardly directed axial nozzle for discharging gases at high velocity, a turbo-compressor in said housing having an axial inlet in communication with said forward opening and having a mixed axial and radial flow compressor discharge portion and including a plurality of independently counter-rotatable rows of impeller blades positioned for mixed axial and radial flow and arranged between said inlet and discharge portion, a gas turbine in said housing having a mixed axial and radial flow entrance and including a plurality of independently counter-rotatable rows of impeller blades positioned for a mixed radial and axial flow, an axial outlet from said turbine, a combustion chamber in said housing between said compressor and turbine, and means coupling individual rows of said turbine impeller blades with individual rows of said compressor impeller blades and means to discharge gases exhausted from said turbine axially in a propulsive jet through said nozzle.

4. In a gas reaction propulsive unit, an outer housing having a forward opening for the entrance of rammed air and a rearwardly directed outlet for discharging gases in the form of a propulsive jet at a high velocity, a stationary inner housing spaced within the outer housing to leave a passageway intermediate said outer and inner housings, a forward inlet in said inner housing, streamlined struts extending radially through the forward portion of the passageway from the outer housing to the inner housing to support the latter, a turbo-compressor in said inner housing communicating with said inlet and having a plurality of immediately adjacent counter-rotatable rows of impeller blades, a gas turbine in said inner housing having a plurality of rows of independently counter-rotatable impeller blades, a combustion chamber in the inner housing between said compressor and turbine, a plurality of coaxial drive shafts extending between said turbine and said compressor, each of said shafts coupling individual rows of said turbine impeller blades with individual rows of said compressor impeller blades, means for supporting said shafts including a plurality of stationary vanes at the exit of the compressor extending substantially radially inward from the inner housing and lying in substantially the same transverse plane as said struts, and an impeller on a forward extension of one of said coaxial shafts and positioned within the forward opening of said outer housing and adapted to propel air rearwardly into the said forward inlet of the inner housing leading into said turbo-compressor and also to propel air through said annular passageway formed between said inner and outer housings.

5. In a gas reaction propulsive unit, an outer housing having a convergent-divergent forward opening for the entrance of rammed air and a rearwardly directed outlet for discharging gases in the form of a propulsive jet at a high velocity, a stationary inner housing spaced within the outer housing to leave an annular passageway intermediate said outer and inner housings, the forward end of the inner housing being adjacent and slightly rearward of the forward end of the outer housing, and the inner housing having a forward inlet in said convergent-divergent forward opening of the outer housing, a turbo-compressor in the forward end of said inner housing communicating with said inlet and having a plurality of counter-rotatable rows of impeller blades, a gas turbine in said inner housing rearward of said compressor having a plurality of rows of counter-rotatable impeller blades, a combustion chamber in the inner housing between said compressor and turbine, a plurality of coaxial drive shafts extending between said turbine and said compressor, each of said shafts coupling individual rows of turbine impeller blades with individual rows of compressor impeller blades, an impeller on a forward extension of one of said coaxial shafts and positioned within said convergent-divergent forward opening of said outer housing and adapted to propel air rearwardly into the said forward inlet of said inner housing leading into said turbo-compressor and also to propel air through said annular passageway formed between said inner and outer housings, said impeller and the foremost row of said compressor impeller blades being carried by the same shaft so as to rotate in the same direction, the portions of said inlet and outer housing lying between said impeller and said foremost row of compressor blades being unobstructed so as to provide an open cascade effect.

6. A gas reaction propulsive power unit comprising a housing having a forward opening for receiving rammed air and a rearwardly directed nozzle, a compressor in the housing communicating with the forward opening and including a plurality of independently counter-rotating rows of impeller blades, a turbine in the housing having a plurality of independently counter-rotating rows of impeller blades, a plurality of concentric drive shafts coupling the rows of turbine blades with the rows of compressor blades, a diaphragm at the rear end of the compressor supporting said shafts, stationary nozzle vanes carried by the housing and arranged at the upstream side of the turbine, a combustion chamber in the housing between the turbine and the compressor discharging the combustion gases through said nozzle vanes, the combustion chamber including an inner shroud carried cantilevered from its rear

39 || @HighEarthOrbit_ linktr.ee/Grider2

end by said nozzle vanes so as to be spaced radially outward from said shafts and rearwardly from said diaphragm to leave a cooling air space around the shafts having its forward end in communication with the compressor, and means for introducing fuel into the combustion chamber.

NATHAN C. PRICE.

REFERENCES CITED

The following references are of record in the file of this patent:

UNITED STATES PATENTS

Number	Name	Date
1,091,581	Ljungström	Mar. 31, 1914
1,874,314	Lasley	Aug. 30, 1932
2,024,274	Campini	Dec. 17, 1935
2,037,880	Charavay	Apr. 21, 1936
2,168,726	Whittle	Aug. 8, 1939
2,256,198	Hahn	Sept. 16, 1941
2,280,835	Lysholm	Apr. 28, 1942
2,342,262	Franz et al.	Feb. 22, 1944

Number	Name	Date
2,354,151	Skoglund	July 18, 1944
2,378,372	Whittle	June 12, 1945
2,396,911	Anxionnaz et al.	Mar. 19, 1946
2,399,046	Larrecq	Apr. 23, 1946
2,399,865	Halford	May 7, 1946
2,404,767	Heppner	July 23, 1946
2,409,176	Allen	Oct. 15, 1946
2,426,098	Heppner	Aug. 19, 1947
2,430,399	Heppner	Nov. 4, 1947
2,445,114	Halford	July 13, 1948
2,477,683	Birmann	Aug. 2, 1949
2,477,798	Griffith	Aug. 2, 1949

FOREIGN PATENTS

Number	Country	Date
879,123	France	Nov. 10, 1942

OTHER REFERENCES

"Jet Propulsion of Aircraft," by G. G. Smith, in Flight, issue of October 9, 1941, pages 239 and 242.

40 || @HighEarthOrbit_ linktr.ee/Grider2

(12) 按照专利合作条约所公布的国际申请

(19) 世界知识产权组织
国 际 局

(43) 国际公布日
2013 年 10 月 10 日 (10.10.2013)

WIPO | PCT

(10) 国际公布号
WO 2013/149534 A1

(51) 国际专利分类号:
B64C 39/00 (2006.01)

(21) 国际申请号: PCT/CN2013/072279

(22) 国际申请日: 2013 年 3 月 7 日 (07.03.2013)

(25) 申请语言: 中文

(26) 公布语言: 中文

(30) 优先权:
201210099079.9 2012 年 4 月 6 日 (06.04.2012) CN

(72) 发明人; 及
(71) 申请人 : 柴贵景 (CHAI, Guijing) [CN/CN]; 中国山西省长治市太行西街 159 号 21 号楼 3 单元 102 户, Shanxi 046011 (CN)。

(74) 代理人: 北京市联德律师事务所 (LEXFIELD LAW OFFICES); 中国北京市朝阳区朝外大街 16 号中国人寿大厦 1009 室, Beijing 100020 (CN)。

(81) 指定国 (除另有指明，要求每一种可提供的国家保护): AE, AG, AL, AM, AO, AT, AU, AZ, BA, BB, BG, BH, BN, BR, BW, BY, BZ, CA, CH, CL, CN, CO, CR, CU, CZ, DE, DK, DM, DO, DZ, EC, EE, EG, ES, FI, GB, GD, GE, GH, GM, GT, HN, HR, HU, ID, IL, IN, IS, JP, KE, KG, KM, KN, KP, KR, KZ, LA, LC, LK, LR, LS, LT, LU, LY, MA, MD, ME, MG, MK, MN, MW, MX, MY, MZ, NA, NG, NI, NO, NZ, OM, PA, PE, PG, PH, PL, PT, QA, RO, RS, RU, RW, SC, SD, SE, SG, SK, SL, SM, ST, SV, SY, TH, TJ, TM, TN, TR, TT, TZ, UA, UG, US, UZ, VC, VN, ZA, ZM, ZW。

(84) 指定国 (除另有指明，要求每一种可提供的地区保护): ARIPO (BW, GH, GM, KE, LR, LS, MW, MZ, NA, RW, SD, SL, SZ, TZ, UG, ZM, ZW), 欧亚 (AM, AZ, BY, KG, KZ, RU, TJ, TM), 欧洲 (AL, AT, BE, BG, CH, CY, CZ, DE, DK, EE, ES, FI, FR, GB, GR, HR, HU, IE, IS, IT, LT, LU, LV, MC, MK, MT, NL, NO, PL, PT, RO, RS, SE, SI, SK, SM, TR), OAPI (BF, BJ, CF, CG, CI, CM, GA, GN, GQ, GW, ML, MR, NE, SN, TD, TG)。

本国际公布:
— 包括国际检索报告(条约第 21 条(3))。

(54) Title: FLYING SAUCER TYPE AIRCRAFT WITH DOUBLE SCREW DISCS

(54) 发明名称 : 一种双螺旋盘碟形飞行器

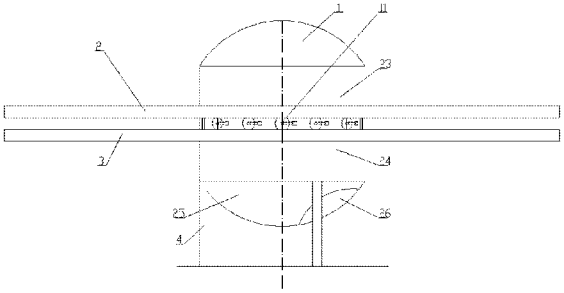

图 1 / FIG. 1

(57) Abstract: Disclosed is a flying saucer type aircraft with double screw discs, comprising an engine, an upper body, a lower body, an upper screw disc and a lower screw disc. An upper cover is arranged at the bottom of the upper body and a lower cover is arranged at the top of the lower body. The upper and lower covers are connected as a whole through an axle tube. A central gear is installed on the axle tube. The lower screw disc is installed on the central gear and the upper screw disc is located above the lower screw disc. The engine is fixed on the lower cover to drive the central gear to drive the upper and lower screw discs to rotate. Helical blades of the upper and lower screw discs are opposite in rotary direction, angle of attack and installation angle, so that the problem of rotary balance of the body is solved. The flying saucer type aircraft provided by the invention is simple in structure, light in weight and low in cost, and saves much lifting power.

(57) 摘要: 本发明公开了一种双螺旋盘碟形飞行器，包括发动机、上机身、下机身、上螺旋盘和下螺旋盘，上机身底部设有上盖，下机身顶部设有下盖，上盖和下盖由轴管连接为一体，中心齿轮安装在轴管上，下螺旋盘安装在中心齿轮上，上螺旋盘位于下螺旋盘的上方。发动机固定在下盖上，驱动中心齿轮带动上、下螺旋盘旋转，上下螺旋盘螺旋叶片旋转方向相反、迎风角相反、安装角度也相反，解决了机身的旋转平衡问题。本发明的碟形飞行器结构简单、重量轻、成本低、更加节省升降动力。

WO 2013/149534 A1

41 || @HighEarthOrbit_ linktr.ee/Grider2

一种双螺旋盘碟形飞行器

技术领域

本发明涉及一种飞行器，特别是涉及一种碟形飞行器。

背景技术

飞行器的种类很多，但碟形飞行器并不多见，主要是以 UFO 的形象出现。

申请号 201110230142.3 的专利申请公开了一种碟形飞行器，该飞行器包括发动机、机身和旋翼，机身外部设有旋翼支架，机身上套装机身轴承，机身上部与下部的机身轴承和旋翼支架悬空端之间分别螺接螺旋叶片。工作时，发动机带动螺旋叶片旋转，机身上部的螺旋叶片和下部的螺旋叶片旋转方向正好相反，因此解决了机身的平衡问题和转动问题。但是该飞行器的结构较为复杂，且飞行器重量较重，成本较高。

发明内容

本发明的目的是提供一种结构更加简单、重量更轻、成本更低、更加节省升降动力的双螺旋盘碟形飞行器。

本发明的双螺旋盘碟形飞行器包括发动机、上机身、下机身、上螺旋盘和下螺旋盘，上机身上方设有玻璃顶盖，下机身下方设有底盖和支脚，底盖上设有舱盖。

在上机身的底部设有上盖，下机身的顶部设有下盖，所述上盖和下盖由穿过其中心孔的轴管连接为一体，中心齿轮通过轴管轴承安装在轴管上，发动机固定在下盖上，发动机上的输出轴与主动齿轮之间通过伞形齿轮啮合，主动齿轮与中心齿轮啮合，在上机身的外部安装有拉力圈，所述拉力圈的下部与上盖固定连接。

在上机身上安装有上轴承圈，下机身上安装有下轴承圈，所

42 || @HighEarthOrbit_ linktr.ee/Grider2

述上轴承圈固定在拉力圈的上部，下轴承圈固定在下盖上，在上轴承圈的下表面和下轴承圈的上表面分别设有轴承轨道。

所述下螺旋盘由下螺旋盘内圈连接板、固定在下螺旋盘内圈连接板外周的下螺旋盘内圈、与下螺旋盘内圈同心圆设置的下螺旋盘外圈以及设置在下螺旋盘内圈和下螺旋盘外圈之间的螺旋叶片构成，在下螺旋盘内圈的上下表面上均设有轴承轨道，所述下螺旋盘通过设置在下螺旋盘内圈连接板中心的齿孔啮合在中心齿轮上，下螺旋盘内圈下表面的轴承轨道与下轴承圈上表面的轴承轨道通过滚珠滚动配合。

所述上螺旋盘位于下螺旋盘的上方，由上螺旋盘内圈、与上螺旋盘内圈同心圆设置的上螺旋盘外圈以及设置在上螺旋盘内圈和上螺旋盘外圈之间的螺旋叶片构成，在上螺旋盘内圈的上下表面上均设有轴承轨道，所述上螺旋盘内圈上表面的轴承轨道通过滚珠与上轴承圈下表面的轴承轨道滚动配合。

在拉力圈上设置有不少于 3 个导向轮，所述导向轮置于上螺旋盘内圈和下螺旋盘内圈之间，分别与上螺旋盘内圈下表面的轴承轨道和下螺旋盘内圈上表面的轴承轨道滚动配合。

进一步地，本发明还在上螺旋盘内圈下表面和下螺旋盘内圈上表面轴承轨道的外侧设置齿形轨道，在拉力圈上设置不少于 3 个导向齿轮，所述导向齿轮置于上螺旋盘内圈和下螺旋盘内圈之间，分别与上螺旋盘内圈下表面和下螺旋盘内圈上表面的齿形轨道啮合。

其中，所述的导向齿轮均匀布置在导向轮之间。

本发明中，所述的螺旋叶片围绕轴管辐射状分布，螺旋叶片的迎风面呈仰角。

所述任意一片螺旋叶片的顶边与相邻螺旋叶片的底边处于同一垂直平面，全体螺旋叶片在水平面上无间隙。

本发明还在所述的上盖、下盖和下螺旋盘内圈连接板的对应位置上均设有舱门。

43 || @HighEarthOrbit_ linktr.ee/Grider2

本发明的双螺旋盘碟形飞行器在机身中部装有上下两层平行的平板形螺旋盘，螺旋盘内圈和外圈之间设置螺旋叶片，各螺旋叶片分别绕机身中轴线呈辐射状分布，当发动机工作时，带动下螺旋盘旋转，受力向上飘动，向上顶住导向轮迫使上螺旋盘做反向旋转，由于上下螺旋盘螺旋叶片旋转方向相反、迎风角相反、安装角度相反，因此解决了机身的旋转平衡问题。螺旋叶片的迎风面呈仰角，相邻两叶片的顶边与底边从垂直角度处于同一平面，使得螺旋叶片整体覆盖了其所占空域，对该空域的空气全部无泄漏的加以利用，使飞行器的升力最大化，与螺旋桨直升机相比，飞行器在螺旋盘转速比螺旋桨低数倍的情况下就能升空，普通发动机足可胜任。

与背景技术的碟形飞行器相比，以前的螺旋盘为梯形结构，本发明的螺旋盘为平板结构，本发明结构是在同等长度螺旋叶片情况下直径最大化，也就是螺旋盘外圈直径最大化，螺旋叶片全周长均匀安装在螺旋盘外圈内，使螺旋盘外圈抗拉强度得到最大的发挥和利用，螺旋盘在高速旋转时只要螺旋盘外圈的抗拉强度保证直径保持不变，螺旋盘外圈就不会产生上下大幅度飘动，所以本发明去除了旋翼支架定位轴承圈等装置，从而使飞行器结构更加简单、重量更轻。

本发明的碟形飞行器只需一个动力就能实现升降功能。如果再配上风孔或其它转向、平衡装置，还能实现前、后、左、右方向飞行和整机旋转等动作。

附图说明

图 1 是本发明实施例的结构示意图。

图 2 是本发明实施例机身部分的剖切结构示意图。

图 3 是图 2 中下螺旋盘的结构示意图。

图 4 是图 2 中上盖的结构示意图。

44 || @HighEarthOrbit_ linktr.ee/Grider2

图 5 是图 2 中下盖的结构示意图。

图 6 是图 2 中上下螺旋盘内圈、上下轴承圈安装结构的直线展开示意图。

图 7 是图 2 中导向轮的安装结构示意图。

图 8 是图 2 中导向齿轮的安装结构示意图。

图 9 是上下螺旋盘上螺旋叶片的安装位置直线展开示意图。

图中：1—玻璃顶盖；2—上螺旋盘；3—下螺旋盘；4—支脚；5—上螺旋盘内圈；6—上螺旋盘外圈；7—下螺旋盘内圈；8—下螺旋盘外圈；9—下螺旋盘内圈连接板；10—导向齿轮；11—导向轮；12—轴管；13—中心齿轮；14—主动齿轮；15—伞形齿轮；16—发动机；17—上盖；18—下盖；19—拉力圈；20—上轴承圈；21—下轴承圈；22—轴管轴承；23—上机身；24—下机身；25—底盖；26—舱盖；27—舱门；28—螺旋叶片；29—轴承轨道；30—齿形轨道；31—滚珠。

具体实施方式

下面结合附图和实施例对本发明作进一步的详细说明，但实施例并不构成对本发明的任何限制。

双螺旋盘碟形飞行器的结构如图 1 所示，包括发动机 16、上机身 23、下机身 24、上螺旋盘 2 和下螺旋盘 3，上机身 23 上方设有玻璃顶盖 1，下机身 24 下方设有底盖 25 和支脚 4，底盖 25 上设有舱盖 26，上螺旋盘 2 和下螺旋盘 3 安装在上机身 23 与下机身 24 之间。

其机身部分的结构如图 2 所示，分为上下两部分。在上机身 23 的底部设有图 4 所示的上盖 17，下机身 24 的顶部设有图 5 所示的下盖 18，上盖 17 和下盖 18 由穿过其中心孔的轴管 12 连接为一体。上盖 17 的外部与拉力圈 19 的下部固定连接，拉力圈 19 上部的外面固定连接有上轴承圈 20，下盖 18 的外部与下轴承圈 21 固定连接，在上轴承圈 20 的下表面和下轴承圈 21 的上表面分别

45 || @HighEarthOrbit_ linktr.ee/Grider2

设有轴承轨道 29。

双螺旋盘碟形飞行器的动力部分为固定在下盖 18 上的发动机 16，发动机上的输出轴经变速箱变速后通过伞形齿轮 15 将水平轴向转动转变为垂直轴向转动并传递给主动齿轮 14，主动齿轮 14 与通过轴管轴承 22 安装在轴管 12 上的中心齿轮 13 啮合，带动中心齿轮 13 转动，从而驱动上螺旋盘 2 和下螺旋盘 3 旋转。

下螺旋盘 3 的结构如图 3 所示，由下螺旋盘内圈连接板 9、固定在下螺旋盘内圈连接板 9 外周的下螺旋盘内圈 7、与下螺旋盘内圈 7 同心圆设置的下螺旋盘外圈 8 以及设置在下螺旋盘内圈 7 和下螺旋盘外圈 8 之间的螺旋叶片 28 构成。下螺旋盘内圈连接板 9 的中心设有与中心齿轮 13 外齿尺寸相同的内齿孔，下螺旋盘 3 通过该内齿孔啮合在中心齿轮 13 上。各螺旋叶片 28 分别围绕下螺旋盘 3 中心呈辐射状分布，螺旋叶片的迎风面呈仰角，任意一片螺旋叶片 28 的顶边与相邻螺旋叶片的底边处于同一垂直平面，如图 9 所示。

上螺旋盘 2 位于下螺旋盘 3 的上方，结构与下螺旋盘 3 相似，由上螺旋盘内圈 5、与上螺旋盘内圈 5 同心圆设置的上螺旋盘外圈 6 以及设置在上螺旋盘内圈 5 和上螺旋盘外圈 6 之间的螺旋叶片 28 构成。上螺旋盘 2 上的螺旋叶片 28 与下螺旋盘 3 上安装的螺旋叶片 28 迎风面相反、角度相反，因此上螺旋盘 2 与下螺旋盘 3 的旋向相反。

如图 6 所示，在上螺旋盘内圈 5 的上下表面、下螺旋盘内圈 7 的上下表面均设有轴承轨道 29，其轨道中心与上轴承圈 20 下表面和下轴承圈 21 上表面轴承轨道 29 的轨道中心相一致、直径相等，下螺旋盘内圈 7 下表面的轴承轨道 29 与下轴承圈 21 上表面的轴承轨道 29 通过滚珠 31 滚动配合，上螺旋盘内圈 5 上表面的轴承轨道 29 通过滚珠 31 与上轴承圈 20 下表面的轴承轨道 29 滚动配合。

同时，上螺旋盘内圈 5 下表面的轴承轨道 29 和下螺旋盘内圈

46 || @HighEarthOrbit_ linktr.ee/Grider2

7 上表面的轴承轨道 29 又通过安装在拉力圈 19 上的数十个导向轮 11 滚动配合，如图 7 所示。

下螺旋盘 3 转速低时，上螺旋盘 2 凭借自身的重量压迫设置在上下螺旋盘内圈之间的导向轮 11 转动，上螺旋盘 2 随之做反向转动。当下螺旋盘 3 达到一定的转速后，其升力迫使设置在上下螺旋盘内圈之间的导向轮 11 随其转动，迫使上螺旋盘 2 随之做反向转动。

为防止导向轮 11 滑动，在导向轮 11 之间还均匀设置了不少于三个的导向齿轮 10 与上下螺旋盘内圈的齿形轨道 30 啮合，以保证上下螺旋盘的转速一致。如图 8 所示，在上螺旋盘内圈 5 下表面和下螺旋盘内圈 7 上表面轴承轨道 29 的外侧分别设置齿形轨道 30，设置在拉力圈 19 上的导向齿轮 10 分别与上螺旋盘内圈 5 下表面和下螺旋盘内圈 7 上表面的齿形轨道 30 啮合。

上下螺旋盘在工作过程中会产生整体的上下少许飘动，因此，导向轮 11 和导向齿轮 10 也设计成可以上下随之移动，套装在中心齿轮 13 上的下螺旋盘内圈连接板 9 中心的内齿孔也可以在中心齿轮 13 上上下移动。

另外，在上盖 17、下盖 18 以及下螺旋盘内圈连接板 9 的对应位置上均设有舱门 27。

工作时，发动机 16 启动，经过变速输出轴通过伞形齿轮 15 将水平轴向转动转变为垂直轴向转动传递于主动齿轮 14，主动齿轮 14 与中心齿轮 13 啮合从而带动下螺旋盘 3 转动，下螺旋盘内圈 7 通过导向轮 11 与导向齿轮 10 带动上螺旋盘内圈 5 反向转动，从而使上螺旋盘 2 也随之反向旋转。螺旋叶片 28 的迎风面呈仰角，上下螺旋盘的旋转方向相反，所以上下螺旋盘的螺旋叶片 28 角度相反，旋转速度相同，对机身的旋转起到了平衡作用，机身不会旋转。

加上风孔或其它转向、平衡系统后，本发明的双螺旋盘碟形飞行器还能控制前、后、左、右以及旋转方向的飞行。

47 || @HighEarthOrbit_ linktr.ee/Grider2

权 利 要 求

1. 双螺旋盘碟形飞行器，包括发动机（16）、上机身（23）、下机身（24）、上螺旋盘（2）和下螺旋盘（3），上机身（23）上方设有玻璃顶盖（1），下机身（24）下方设有底盖（25）和支脚（4），底盖（25）上设有舱盖（26），其特征是:

在上机身（23）的底部设有上盖（17），下机身（24）的顶部设有下盖（18），所述上盖（17）和下盖（18）由穿过其中心孔的轴管（12）连接为一体，中心齿轮（13）通过轴管轴承（22）安装在轴管（12）上，发动机（16）固定在下盖（18）上，发动机上的输出轴与主动齿轮（14）之间通过伞形齿轮（15）啮合，主动齿轮（14）与中心齿轮（13）啮合，在上机身（23）的外部安装有拉力圈（19），所述拉力圈（19）的下部与上盖（17）固定连接;

在上机身（23）上安装有上轴承圈（20），下机身（24）上安装有下轴承圈（21），所述上轴承圈（20）固定在拉力圈（19）的上部，下轴承圈（21）固定在下盖（18）上，在上轴承圈（20）的下表面和下轴承圈（21）的上表面分别设有轴承轨道（29）;

所述下螺旋盘（3）由下螺旋盘内圈连接板（9）、固定在下螺旋盘内圈连接板（9）外周的下螺旋盘内圈（7）、与下螺旋盘内圈（7）同心圆设置的下螺旋盘外圈（8）以及设置在下螺旋盘内圈（7）和下螺旋盘外圈（8）之间的螺旋叶片（28）构成，在下螺旋盘内圈（7）的上下表面上均设有轴承轨道（29），所述下螺旋盘（3）通过设置在下螺旋盘内圈连接板（9）中心的齿孔啮合在中心齿轮（13）上，下螺旋盘内圈（7）下表面的轴承轨道（29）与下轴承圈（21）上表面的轴承轨道（29）通过滚珠（31）滚动配合;

所述上螺旋盘（2）位于下螺旋盘（3）的上方，由上螺旋盘

48 || @HighEarthOrbit_ linktr.ee/Grider2

内圈（5）、与上螺旋盘内圈（5）同心圆设置的上螺旋盘外圈（6）以及设置在上螺旋盘内圈（5）和上螺旋盘外圈（6）之间的螺旋叶片（28）构成，在上螺旋盘内圈（5）的上下表面上均设有轴承轨道（29），所述上螺旋盘内圈（5）上表面的轴承轨道（29）通过滚珠（31）与上轴承圈（20）下表面的轴承轨道（29）滚动配合；

在拉力圈（19）上设置有不少于 3 个导向轮（11），所述导向轮（11）置于上螺旋盘内圈（5）和下螺旋盘内圈（7）之间，分别与上螺旋盘内圈（5）下表面的轴承轨道（29）和下螺旋盘内圈（7）上表面的轴承轨道（29）滚动配合。

2. 根据权利要求 1 所述的双螺旋盘碟形飞行器，其特征是在上螺旋盘内圈（5）下表面和下螺旋盘内圈（7）上表面轴承轨道（29）的外侧设置齿形轨道（30），在拉力圈（19）上设置不少于 3 个导向齿轮（10），所述导向齿轮（10）置于上螺旋盘内圈（5）和下螺旋盘内圈（7）之间，分别与上螺旋盘内圈（5）下表面和下螺旋盘内圈（7）上表面的齿形轨道（30）啮合。

3. 根据权利要求 2 所述的双螺旋盘碟形飞行器，其特征是所述的导向齿轮（10）均匀布置在导向轮（11）之间。

4. 根据权利要求 1 所述的双螺旋盘碟形飞行器，其特征是所述的螺旋叶片（28）围绕轴管（12）辐射状分布。

5. 根据权利要求 1 所述的双螺旋盘碟形飞行器，其特征是所述螺旋叶片（28）的迎风面呈仰角。

6. 根据权利要求 1 所述的双螺旋盘碟形飞行器，其特征是所述任意一片螺旋叶片（28）的顶边与相邻螺旋叶片的底边处于同一垂直平面。

7. 根据权利要求 1 所述的双螺旋盘碟形飞行器，其特征是在所述的上盖（17）、下盖（18）和下螺旋盘内圈连接板（9）的对应位置上均设有舱门（27）。

49 || @HighEarthOrbit_ linktr.ee/Grider2

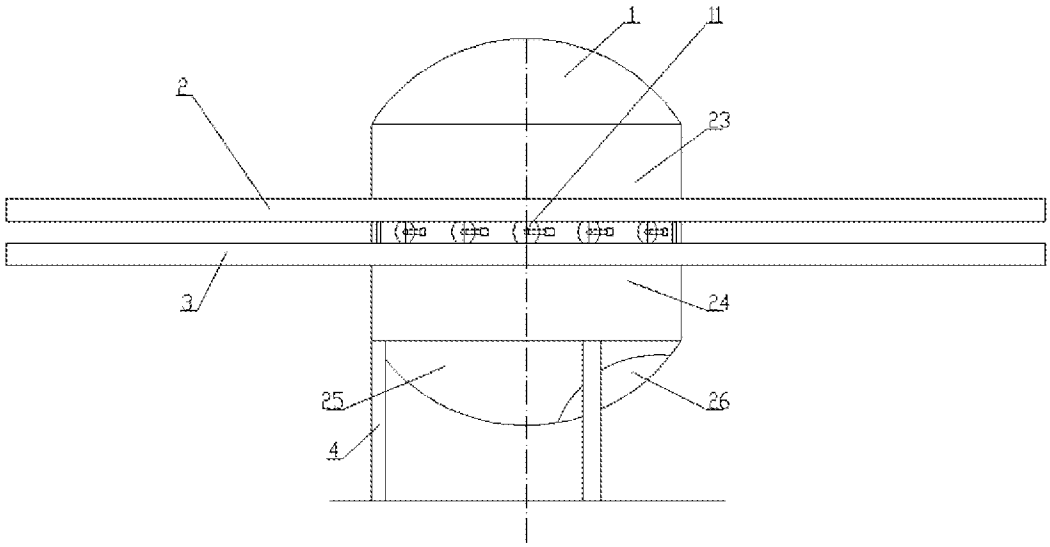

图 1

50 || @HighEarthOrbit_ linktr.ee/Grider2

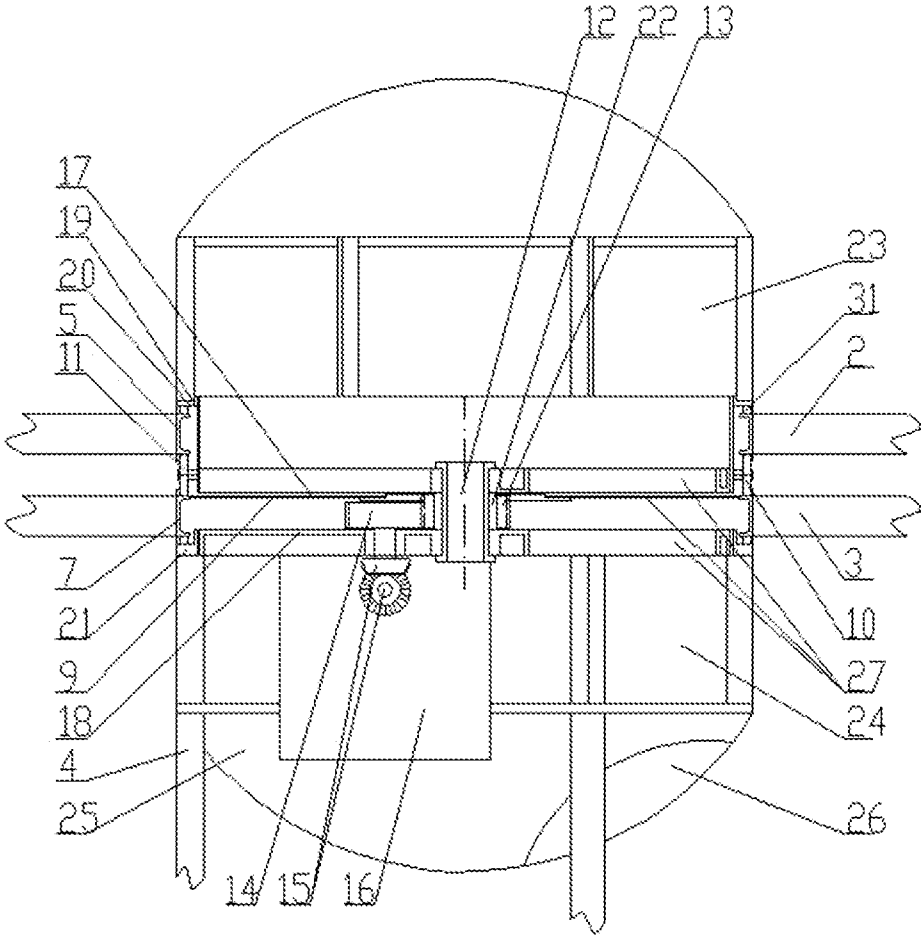

图 2

51 || @HighEarthOrbit_ linktr.ee/Grider2

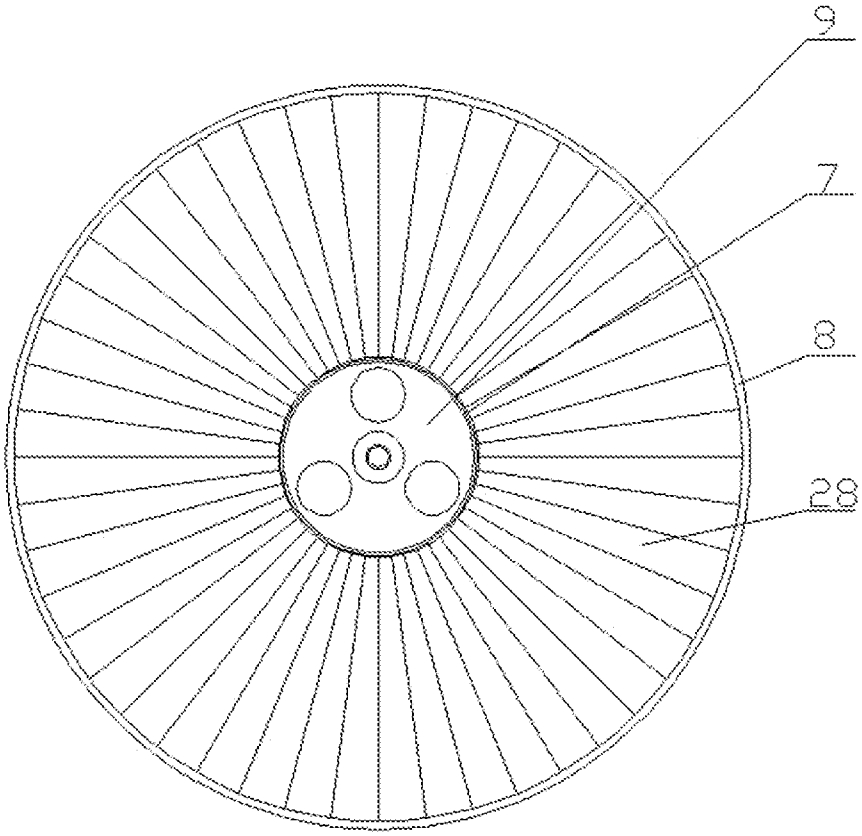

图 3

52 || @HighEarthOrbit_ linktr.ee/Grider2

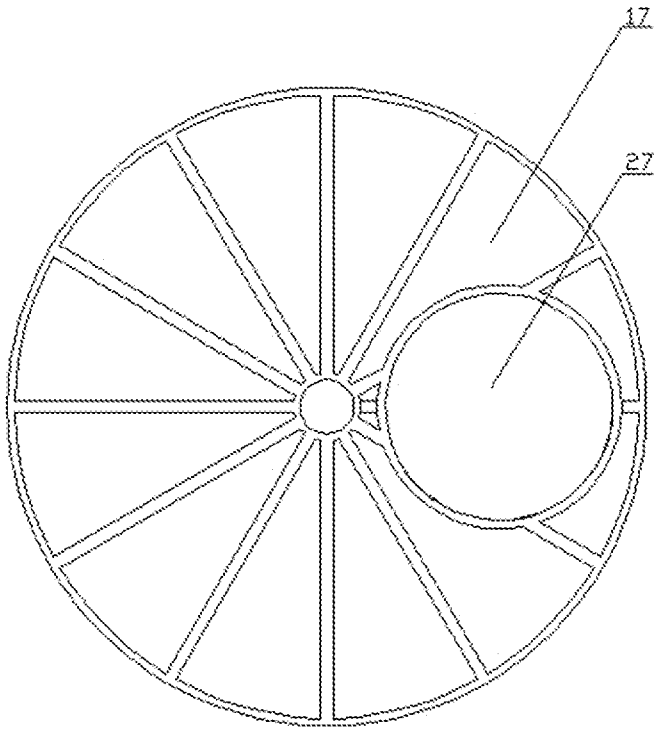

图 4

53 || @HighEarthOrbit_ linktr.ee/Grider2

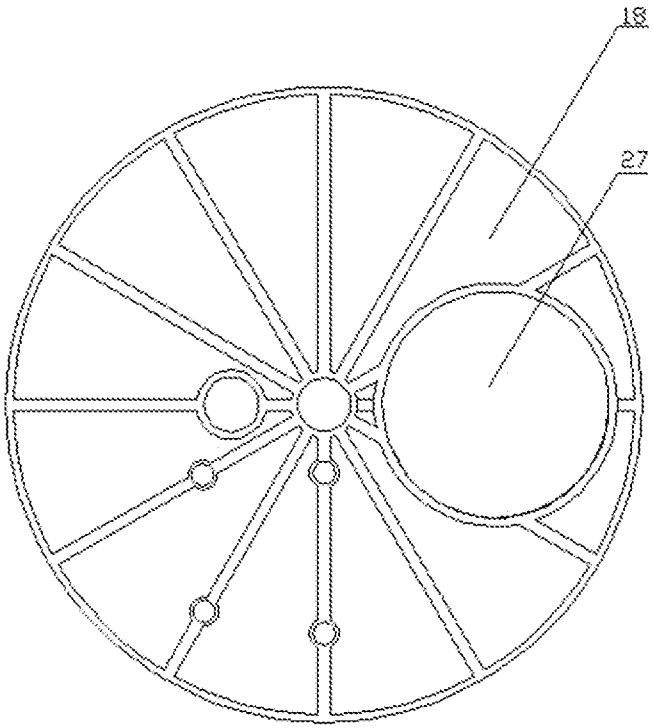

图 5

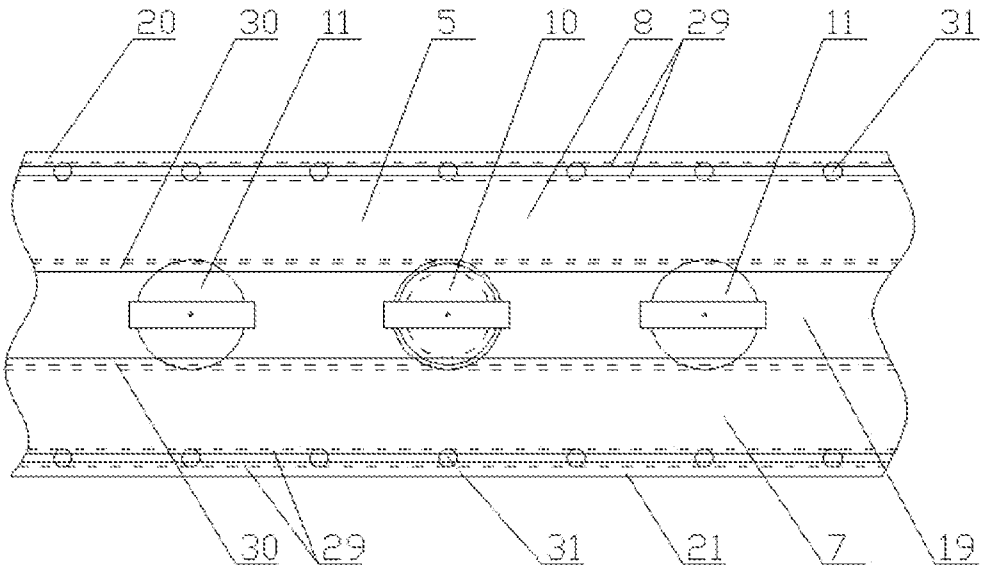

图 6

54 || @HighEarthOrbit_ linktr.ee/Grider2

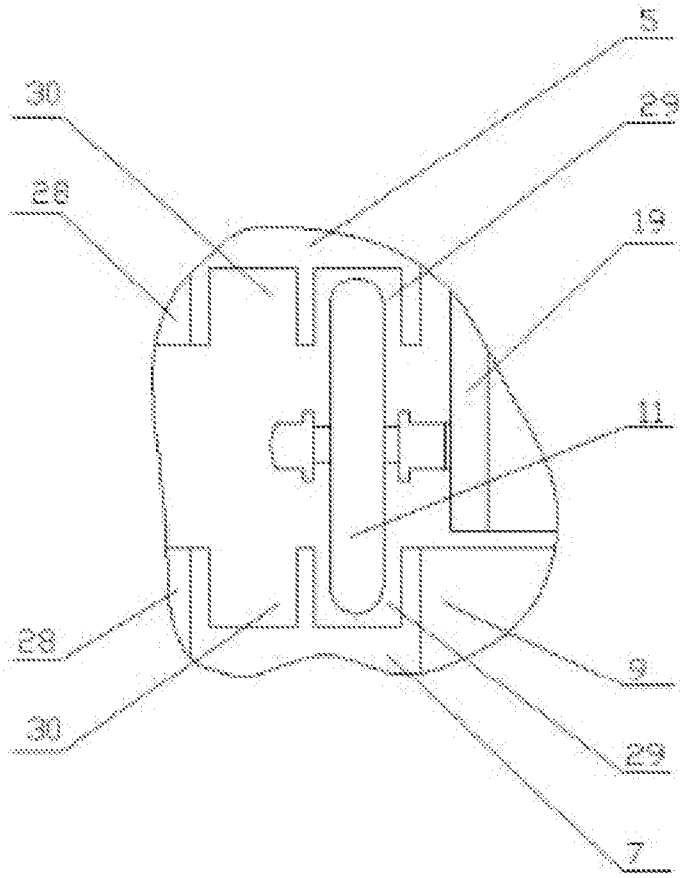

图 7

55 || @HighEarthOrbit_ linktr.ee/Grider2

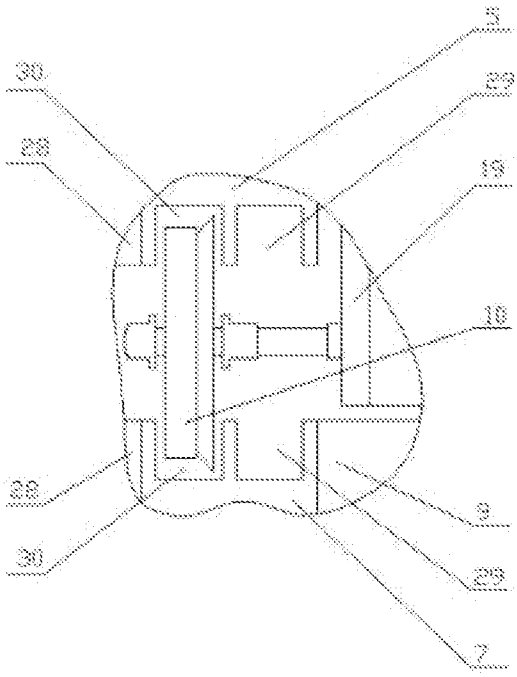

图 8

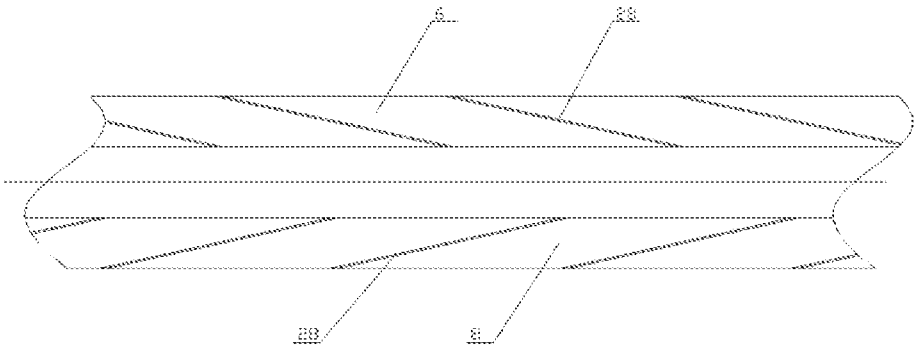

图 9

INTERNATIONAL SEARCH REPORT

International application No.
PCT/CN2013/072279

A. CLASSIFICATION OF SUBJECT MATTER

B64C 39/00 (2006.01) i

According to International Patent Classification (IPC) or to both national classification and IPC

B. FIELDS SEARCHED

Minimum documentation searched (classification system followed by classification symbols)

IPC: B64C

Documentation searched other than minimum documentation to the extent that such documents are included in the fields searched

Electronic data base consulted during the international search (name of data base and, where practicable, search terms used)

WPI; EPODOC; CNKI; CNPAT: flying saucer; saucer?, disk, coaxial, counter w rotate

C. DOCUMENTS CONSIDERED TO BE RELEVANT

Category*	Citation of document, with indication, where appropriate, of the relevant passages	Relevant to claim No.
PX	CN 102602539 A (CHAI, Guijing), 25 July 2012 (25.07.2012), description, paragraphs [0029]-[0042]	1-7
A	CN 102336271 A (CHAI, Guijing), 01 February 2012 (01.02.2012), description, paragraphs [0008]-[0009]	1-7
A	CN 101525051 A (CHEN, Jingping), 09 September 2009 (09.09.2009), the whole document	1-7
A	CN 101857087 A (SHI, Zhiyong), 13 October 2010 (13.10.2010), the whole document	1-7
A	DE 10014899 A1 (RICHTER, H.), 27 September 2001 (27.09.2001), the whole document	1-7
A	US 2005/0067527 A1 (PETERSEN, B.L.), 31 March 2005 (31.03.2005), the whole document	1-7
A	CH 681290 A5 (CLAUDIO, R.), 26 February 1993 (26.02.1993), figure 2	1-7

☐ Further documents are listed in the continuation of Box C. ☒ See patent family annex.

* Special categories of cited documents:

"A" document defining the general state of the art which is not considered to be of particular relevance

"E" earlier application or patent but published on or after the international filing date

"L" document which may throw doubts on priority claim(s) or which is cited to establish the publication date of another citation or other special reason (as specified)

"O" document referring to an oral disclosure, use, exhibition or other means

"P" document published prior to the international filing date but later than the priority date claimed

"T" later document published after the international filing date or priority date and not in conflict with the application but cited to understand the principle or theory underlying the invention

"X" document of particular relevance; the claimed invention cannot be considered novel or cannot be considered to involve an inventive step when the document is taken alone

"Y" document of particular relevance; the claimed invention cannot be considered to involve an inventive step when the document is combined with one or more other such documents, such combination being obvious to a person skilled in the art

"&" document member of the same patent family

Date of the actual completion of the international search	Date of mailing of the international search report
24 April 2013 (24.04.2013)	**16 May 2013 (16.05.2013)**
Name and mailing address of the ISA/CN: State Intellectual Property Office of the P. R. China No. 6, Xitucheng Road, Jimenqiao Haidian District, Beijing 100088, China Facsimile No.: (86-10) 62019451	Authorized officer **ZHUO, Qiwei** Telephone No.: (86-10) **62085471**

INTERNATIONAL SEARCH REPORT
Information on patent family members

International application No.
PCT/CN2013/072279

Patent Documents referred in the Report	Publication Date	Patent Family	Publication Date
CN 102602539 A	25.07.2012	None	
CN 102336271 A	01.02.2012	None	
CN 101525051 A	09.09.2009	None	
CN 101857087 A	13.10.2010	None	
DE 10014899 A1	27.09.2001	None	
US 2005/0067527 A1	31.03.2005	None	
CH 681290 A5	26.02.1993	None	

国际检索报告

国际申请号
PCT/CN2013/072279

A. 主题的分类

B64C 39/00 (2006.01) i

按照国际专利分类(IPC)或者同时按照国家分类和 IPC 两种分类

B. 检索领域

检索的最低限度文献(标明分类系统和分类号)

IPC: B64C

包含在检索领域中的除最低限度文献以外的检索文献

在国际检索时查阅的电子数据库(数据库的名称，和使用的检索词（如使用）)

WPI; EPODOC; CNKI; CNPAT: 飞碟，同轴，反转；saucer?, disk, coaxial, counter w rotate

C. 相关文件

类　型*	引用文件，必要时，指明相关段落	相关的权利要求
PX	CN 102602539 A （柴贵景） 25.7 月 2012 （25.07.2012） 说明书第 [0029]-[0042]段	1-7
A	CN 102336271 A （柴贵景） 01.2 月 2012 （01.02.2012） 说明书第 [0008]-[0009]段	1-7
A	CN 101525051 A （陈敬萍） 09.9 月 2009 （09.09.2009） 全文	1-7
A	CN 101857087 A （史智勇） 13.10 月 2010 （13.10.2010） 全文	1-7
A	DE 10014899 A1 （RICHTER HELMUT） 27.9 月 2001 （27.09.2001） 全文	1-7
A	US 2005/0067527 A1 （PETERSEN B L） 31.3 月 2005 （31.03.2005） 全文	1-7
A	CH 681290 A5 （CLAUDIO RIBONI） 26.2 月 1993 （26.02.1993） 图 2	1-7

☐ 其余文件在 C 栏的续页中列出。　　☒ 见同族专利附件。

* 引用文件的具体类型：

"A" 认为不特别相关的表示了现有技术一般状态的文件

"E" 在国际申请日的当天或之后公布的在先申请或专利

"L" 可能对优先权要求构成怀疑的文件，或为确定另一篇引用文件的公布日而引用的或者因其他特殊理由而引用的文件（如具体说明的）

"O" 涉及口头公开、使用、展览或其他方式公开的文件

"P" 公布日先于国际申请日但迟于所要求的优先权日的文件

"T" 在申请日或优先权日之后公布，与申请不相抵触，但为了理解发明之理论或原理的在后文件

"X" 特别相关的文件，单独考虑该文件，认定要求保护的发明不是新颖的或不具有创造性

"Y" 特别相关的文件，当该文件与另一篇或者多篇该类文件结合并且这种结合对于本领域技术人员为显而易见时，要求保护的发明不具有创造性

"&" 同族专利的文件

国际检索实际完成的日期	国际检索报告邮寄日期
24.4 月 2013 （24.04.2013）	**16.5 月 2013 (16.05.2013)**
ISA/CN 的名称和邮寄地址： 中华人民共和国国家知识产权局 中国北京市海淀区蓟门桥西土城路 6 号 100088 传真号： (86-10)62019451	受权官员 卓启威 电话号码：(86-10) **62085471**

国际检索报告
关于同族专利的信息

国际申请号
PCT/CN2013/072279

检索报告中引用的专利文件	公布日期	同族专利	公布日期
CN 102602539 A	25.07.2012	无	
CN 102336271 A	01.02.2012	无	
CN 101525051 A	09.09.2009	无	
CN 101857087 A	13.10.2010	无	
DE 10014899 A1	27.09.2001	无	
US 2005/0067527 A1	31.03.2005	无	
CH 681290 A5	26.02.1993	无	

60 || @HighEarthOrbit_ linktr.ee/Grider2

United States Patent [19]
Edwards

[11] **3,750,980**
[45] **Aug. 7, 1973**

[54] **AIRCRAFT WITH VERTICAL TAKE OFF AND LANDING CAPABILITY**

[76] Inventor: **Samuel L. Edwards,** 212 Prince St., Newark, N.J. 07102

[22] Filed: **June 30, 1970**

[21] Appl. No.: **51,161**

[52] **U.S. Cl.** ..... **244/12 C**
[51] **Int. Cl.** **B64c 17/02,** B64c 29/00
[58] **Field of Search** ..... 244/12, 23, 93, 12 R, 244/12 C, 12 D, 36, 40, 1 R, 1 SS, 1 SA, 1 SB, 6, 7 R, 7 A, 73, 74

[56] **References Cited**

UNITED STATES PATENTS

3,632,065	1/1972	Rosta	244/12 C
3,335,976	8/1967	Kappus	244/23 B X
3,123,320	3/1964	Slaughter	244/12 C
3,067,967	12/1962	Barr	244/12 C
2,777,649	1/1957	Williams	244/23 C
3,507,461	4/1970	Rosta	244/12 C
3,437,290	4/1969	Norman	244/23 C
3,432,120	3/1969	Guerrero	244/93

Primary Examiner—Duane A. Reger
Assistant Examiner—Carl A. Rutledge
Attorney—Popper, Bain, Bobis and Gilfillan

[57] **ABSTRACT**

An aircraft with vertical landing and take off capability comprising a stator having a housing for control means as well as a cockpit for operational personnel and a turbine like rotor driven by reaction jets mounted on the stator, the turbine rotor having an air inlet on the upper surface of the stator and an air outlet on the bottom of the stator with means for directionally deflecting the air outlet for control purposes; the stator also including weight means mounted along the vertical axis of the stator and displaceable radially from the vertical axis.

6 Claims, 3 Drawing Figures

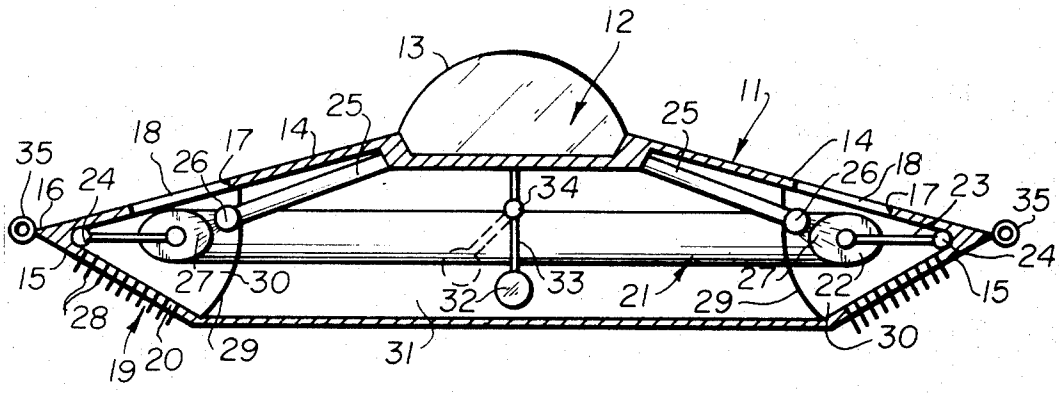

PATENTED AUG 7 1973

3,750,980

FIG. 1

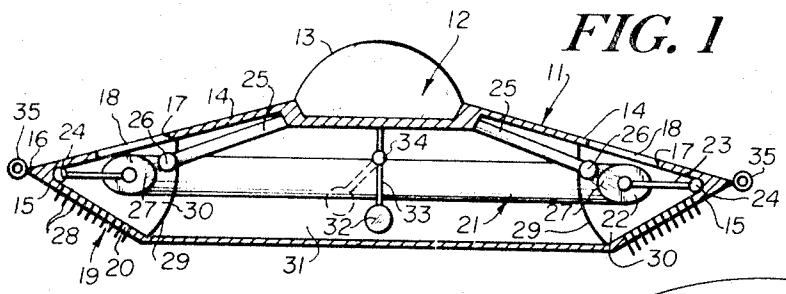

FIG. 2

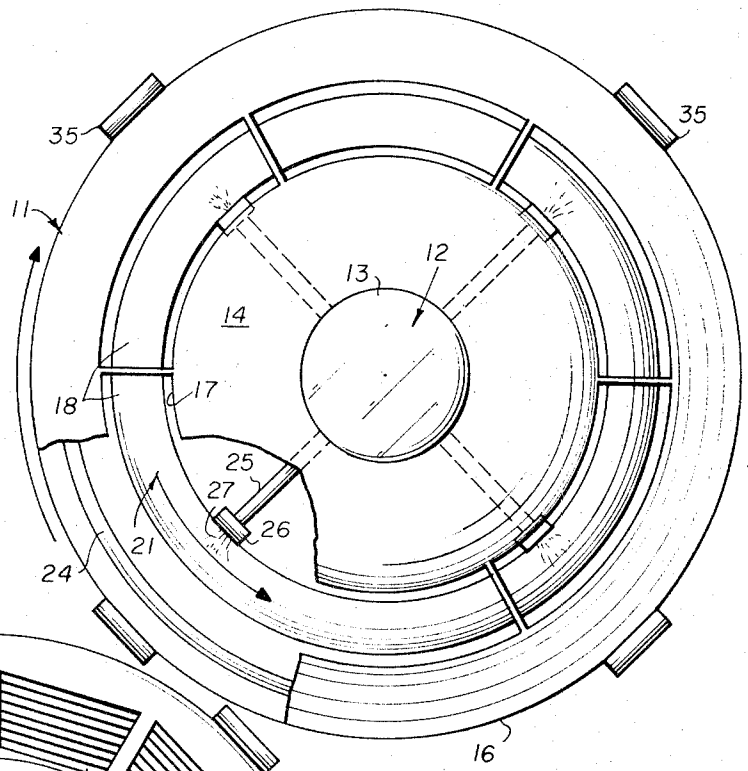

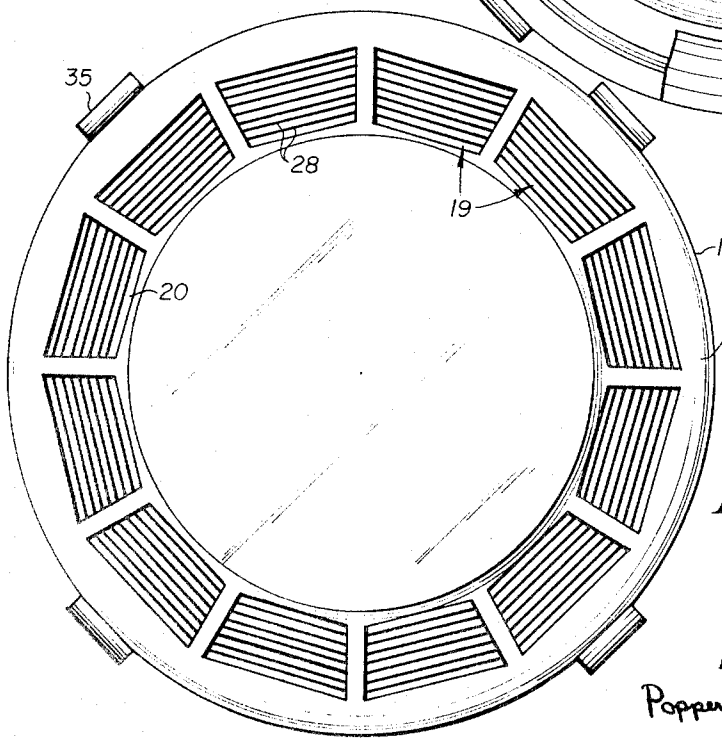

FIG. 3

INVENTOR.
SAMUEL L. EDWARDS

BY
Popper, Bain, Bobis & Gilfillan
ATTORNEYS

62 | | @HighEarthOrbit_ linktr.ee/Grider2

AIRCRAFT WITH VERTICAL TAKE OFF AND LANDING CAPABILITY

BACKGROUND OF INVENTION

Many vertical take off and landing aircrafts are known. Some are in the nature of helicopters characterized by at least one horizontally rotatable blade for the forcing of air downwardly to overcome the drag of gravity. Others are of the fixed wing variety having propulsion means, either propellers driven by conventional internal combustion engines or turbines or jet engines which engines are rotatable either independently of or simultaneously with the fixed wing. In still other fixed wing aircraft, the jet stream generated by a jet engine is deflectable downwardly to overcome the drag of gravity.

In all vertical take off and landing aircraft, control, particularly at sub-flight speeds for fixed wing aircraft is extremely critical and in many instances dangerously unstable. In addition, the aerodynamic structural characteristics of a vertical take off and landing aircraft are not consonant with high speed fixed wing aerodynamic demands.

It is among the objects and advantages of the present invention to provide a totally aerodynamically stable aircraft which has vertical take off and landing capabilities as well as high speed, aerodynamically stable straight flight capabilities.

Another object of the present invention is to provide an aircraft as aforesaid in which propulsion is generated by an annular, rotatable turbine capable of forcing very large quantities of air at relatively high velocities vertically downwardly with respect to the vertical axis of the aircraft.

A further object of the present invention is to provide an aircraft as aforesaid in which the turbine or rotor is driven by jet or rocket propulsion means.

Yet a further object of the present invention is to provide an aircraft as aforesaid in which control may be achieved by either deflecting the outlet air pass from the turbine or upsetting the vertical balance of the aircraft by weight displacement or a combination of the two.

SUMMARY OF INVENTION

An aircraft having vertical take off and landing capabilities comprising, a stator, an annular, rotatable turbine mounted within the stator generally coaxial therewith, reaction jet means mounted on the stator, the reaction jet from said means impinging upon the turbine to generate rotation, the stator having an air inlet opening above the turbine and an air outlet opening beneath the turbine, air deflection means in the air outlet opening, and rotational reaction-countering means on the stator positioned to balance the rotational reactive forces of the jet blast means and the turbine.

PREFERRED EMBODIMENT OF INVENTION

The objects and advantages aforesaid as well as other objects and advantages may be achieved by the aircraft claimed herein a preferred embodiment of which is illustrated in the drawings in which:

FIG. 1 is a side elevational cross sectional view of the aircraft;

FIG. 2 is a partially broken away top plan view of the aircraft; and

FIG. 3 is a bottom plan view of the aircraft.

Referring now to the drawings in detail, the aircraft comprises a stator **11** which is broadly disc-shaped having a circular peripheral configuration. The stator **11** includes a cockpit **12** covered by a transparent cowling **13.** The stator **11** which is analogous to the fuselage of a thick wing aircraft comprises a generally outwardly and downwardly incline annular top wall **14** and an annular inwardly and downwardly inclined bottom wall **15.** The top and bottom walls **14** and **15** are formed upon or engaged to each other at a periphery **16.**

The top wall **14** is provided with openings **17** spaced around the periphery of the aircraft and near the juncture between the top wall **14** and bottom wall **15.** Preferably, the opening **17** is continuous around the periphery of the wall **14** save for radial structural members **18** which extend across the annular opening **17.**

Similarly, the bottom wall **15** is provided with an opening **19.** The opening **19** is similar to the opening **17** in that it preferably extends annularly around the general periphery of the aircraft interrupted only by structural members **20.** An annular turbine **21** is mounted within the stator **11** with the turbine blades **22** positioned generally between openings **17** and **19.** The turbine **21** is provided with a mounting rib **23** which extends radially outwardly to the juncture between the top wall **14** and bottom wall **15** of the stator **11.** A bearing **24** at the radially outward end of the rib **23** provides a low friction mounting between the rotatable turbine **21** and the stator **11.**

The stator **11** is provided with a plurality of radial arms **25** extending outwardly from the cockpit **12** and terminating inwardly of the turbine **21.** Each of the arms **25** is provided with jet blast generating means **26** on its radially outward end. The jet blast **27** is directed at the upper portion of the turbine **21** in such a manner as to induce and generate rotation in the turbine.

Opening **18** in the top wall **14** of the stator **11** functions as an air inlet for the turbine **21.** Similarly, opening **19** in the bottom wall **15** of the stator **11** functions as an air outlet for the turbine **21.** Air is sucked inwardly through the air inlet opening **17** by means of rapid rotation of the turbine **21** generated by the jet blast means **26** and forced outwardly under high velocity through the air outlet opening **19.** The air outlet opening **19** is provided with air deflection vanes **28** which are movable in response to controls in the cockpit **12.**

The stator is also provided with an internal wall **29** isolating the turbine chamber **30** from the remainder of the stator **11.** The wall **29** also defines a second chamber **31** in the stator **11** which may be closed at the bottom or open as desired. The chamber **31** can provide additional carrying space for the aircraft.

In operation, the jet means **26** which may be rocket or conventional turbine jets are energized so that the jet blast **27** engages the turbine blades **22** of the turbine **21.** The turbine **21** rapidly rotates drawing air in through the air inlet **17** and forcing it out under high velocity through the air outlet **19.** In order to control the direction of air passing through the outlet **19,** the vanes **28** may be moved selectively at various positions on the stator **11.** Thus, most of the air can be forced downwardly to overcome gravity lifting the vehicle vertically upwardly. When translation of movement is desired, some of the vanes **28** may be oriented to deflect the air more radially outwardly thereby creating a horizontal vector. In addition, if all of the vanes **28** are posi-

63 || @HighEarthOrbit_ linktr.ee/Grider2

tioned to deflect the air radially outwardly on a symmetrical basis the vertical vector of lift will be decreased without generating an unbalanced horizontal vector.

Another means of control is also illustrated in the drawings and comprises a weight **32** mounted on a shaft **33** on the vertical axis of the stator **11.** A universal joint **34** controlled from within cockpit **12** can displace the weight **32** from the vertical axis of the stator **11** as illustrated in broken lines in FIG. **1.** Displacement of the weight **32** causes the stator **11** to rotate around a horizontal axis of choice depending upon the radial position of weight. This in turn causes the stator **11** to tip generating force vector for translational flight.

The jet blast means **26** employed to generate rotation in the turbine **21** also generate rotational reaction forces in the stator **11.** These rotational reactive forces must be overcome otherwise the stator would tend to rotate in a direction opposite from that of the turbine **21.** In order to overcome these rotational reactive forces, a plurality of counterbalancing jets **35** are mounted on the periphery of the stator **11.** The jets **35** generate a counterbalancing force to the jets **26.** In addition, the vanes **28** could be rotationally deflected to provide some counter rotational forces to overcome the reactive rotational forces generated by the jets **26.**

The foregoing description is merely intended to ilustrate an embodiment of the invention. The component parts have been shown and described. They each may have substitutes which may perform a substantially similar function; such substitutes may be known as proper substitutes for the said components and may have actually been known or invented before the present invention.

What is claimed is:

1. An aircraft having vertical takeoff and landing capabilities comprising,

a. a generally hollow housing,

b. an annular turbine mounted for rotation within the housing,

c. fixed reaction jet means mounted within the housing to impinge said jet upon the turbine,

d. the housing having upper air inlet opening means immediately above the turbine and lower air outlet opening means immediately beneath the turbine,

e. the jet means generating sufficient rotation of the turbine to induce a lift-producing flow of air downwardly through the upper air inlet opening means and outwardly through the lower air outlet opening means, exhaust from the jet means passing downwardly and outwardly through the lower air outlet opening means,

f. air deflection means in the lower air outlet opening means, and

g. rotational reaction-countering means on the housing positioned to balance the rotational reactive forces of the said fixed reaction jet means and the tubine.

2. An aircraft having vertical take-off and landing capabilities comprising,

a. the structure in accordance with claim **1** in which,

b. said air deflection means being adjustably movable to deflect the said stream of air eminating from the lower outlet opening means sufficient to counter rotatable reaction induced in the housing from said jet means and turbine.

3. An aircraft having vertical takeoff and landing capabilities comprising,

a. the structure in accordance with claim **1** and

b. means for moving the center of gravity of the aircraft radially with respect to the turbine including weight means mounted on a vertical shaft extending through the nominal center of gravity of the aircraft, said weight means being movable both in vertical and horizontal planes.

4. An aircraft having vertical take-off and landing capabilities comprising,

a. the structure in accordance with claim **1,** and

b. a conduit in the housing, the conduit extending between the said upper air inlet opening means and lower air outlet opening means,

c. the turbine lying within the conduit intermediate the opening means.

5. An aircraft having vertical takeoff and landing capabilities comprising,

a. the structure in accordance with claim **2** and

b. means for moving the center of gravity of the aircraft radially with respect to the turbine including weight means mounted on a vertical shaft extending through the nominal center of gravity of the aircraft, said weight means being movable both in vertical and horizontal planes.

6. An aircraft having vertical takeoff and landing capabilities comprising,

a. the structure in accordance with claim **5** in which

b. a control means including universal mounting means for the said shaft movable simultaneously in vertical and horizontal planes.

* * * * *

United States Patent

[11] 3,614,030

[72] Inventor Paul S. Moller,
1308 "B" St., Davis, Calif. 95616

[21] Appl. No. 883,980
[22] Filed Dec. 10, 1969
[45] Patented Oct. 19, 1971

[54] AIRCRAFT
3 Claims, 5 Drawing Figs.

[52] U.S. Cl. ..... 244/23 C
[51] Int. Cl. B64c 29/04
[50] Field of Search 244/12, 23

[56] References Cited

UNITED STATES PATENTS

3,082,977	3/1963	Arlin	244/12 C
3,161,374	12/1964	Allred et al.	244/12 B
3,432,120	3/1969	Guerrero	244/93
3,241,771	3/1966	Erwin	239/265.25

Primary Examiner—Milton Buchler
Assistant Examiner—Steven W. Weinrieb
Attorney—Lothrop & West

ABSTRACT: A disclike aircraft body is substantially a figure of revolution about a main axis and has a plurality of air ducts extending through the body in a direction parallel to said axis, the ducts being arranged in arcuate series except in the foremost and rearmost positions. Each of the ducts has individually controlled means for inducing airflow downwardly therethrough such as a fan rotating on an airflow axis parallel to the main axis or a thrust augmentor supplied with pressure gas from a common source. Downstream of the inducing means is an individually controlled rotary member movable about the airflow axis and having deflectors movable about transverse axes to govern the discharge of air from the ducts.

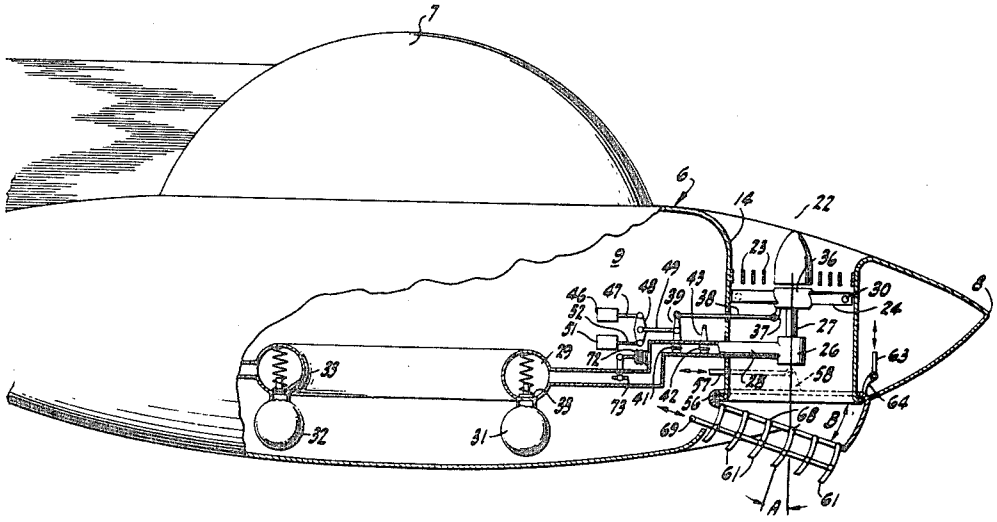

65 || @HighEarthOrbit_ linktr.ee/Grider2

FIG. 1

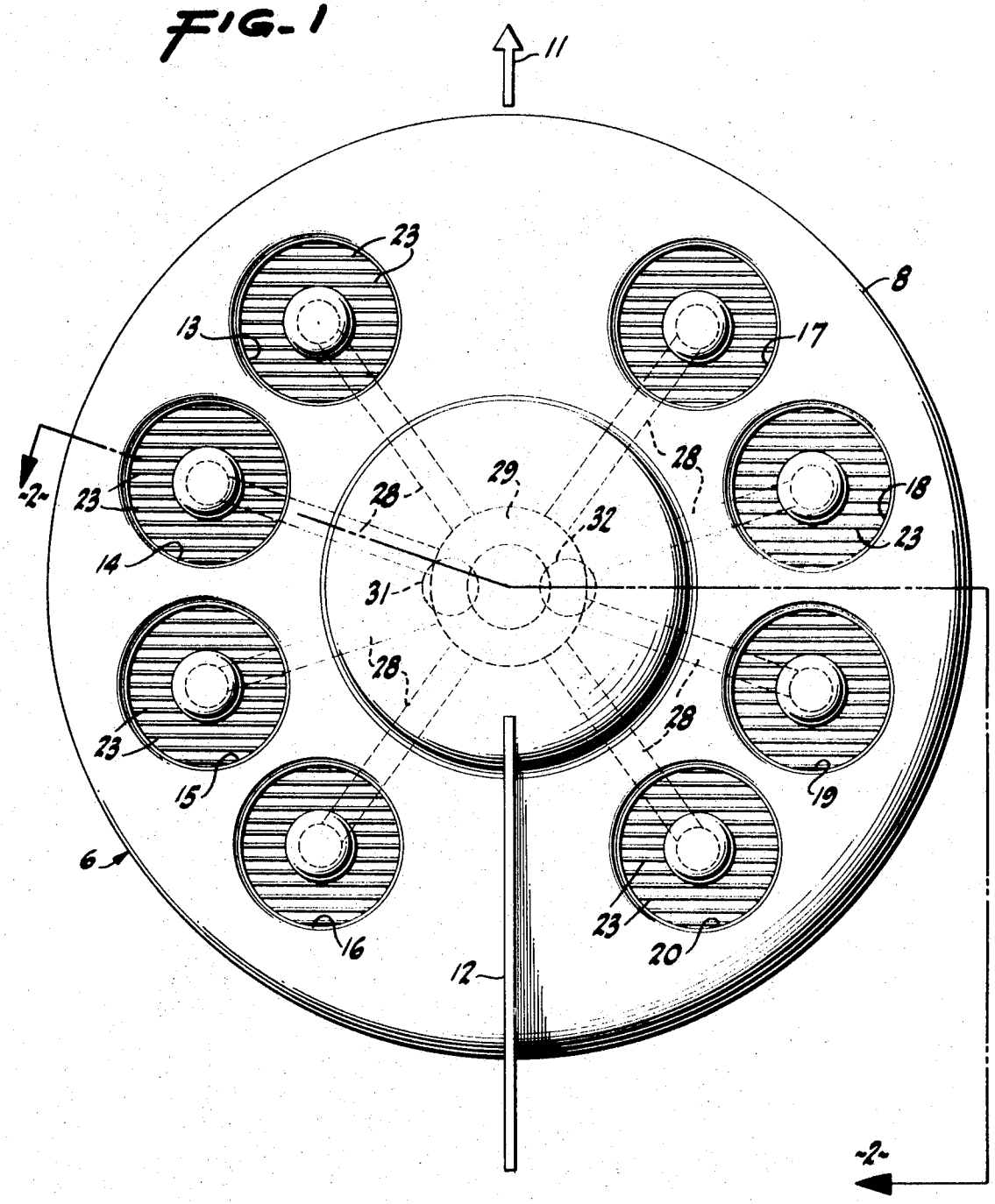

INVENTOR
PAUL S. MOLLER
BY
Lothrop & West
ATTORNEYS

PATENTED OCT 19 1971 3,614,030

SHEET 2 OF 3

FIG. 2

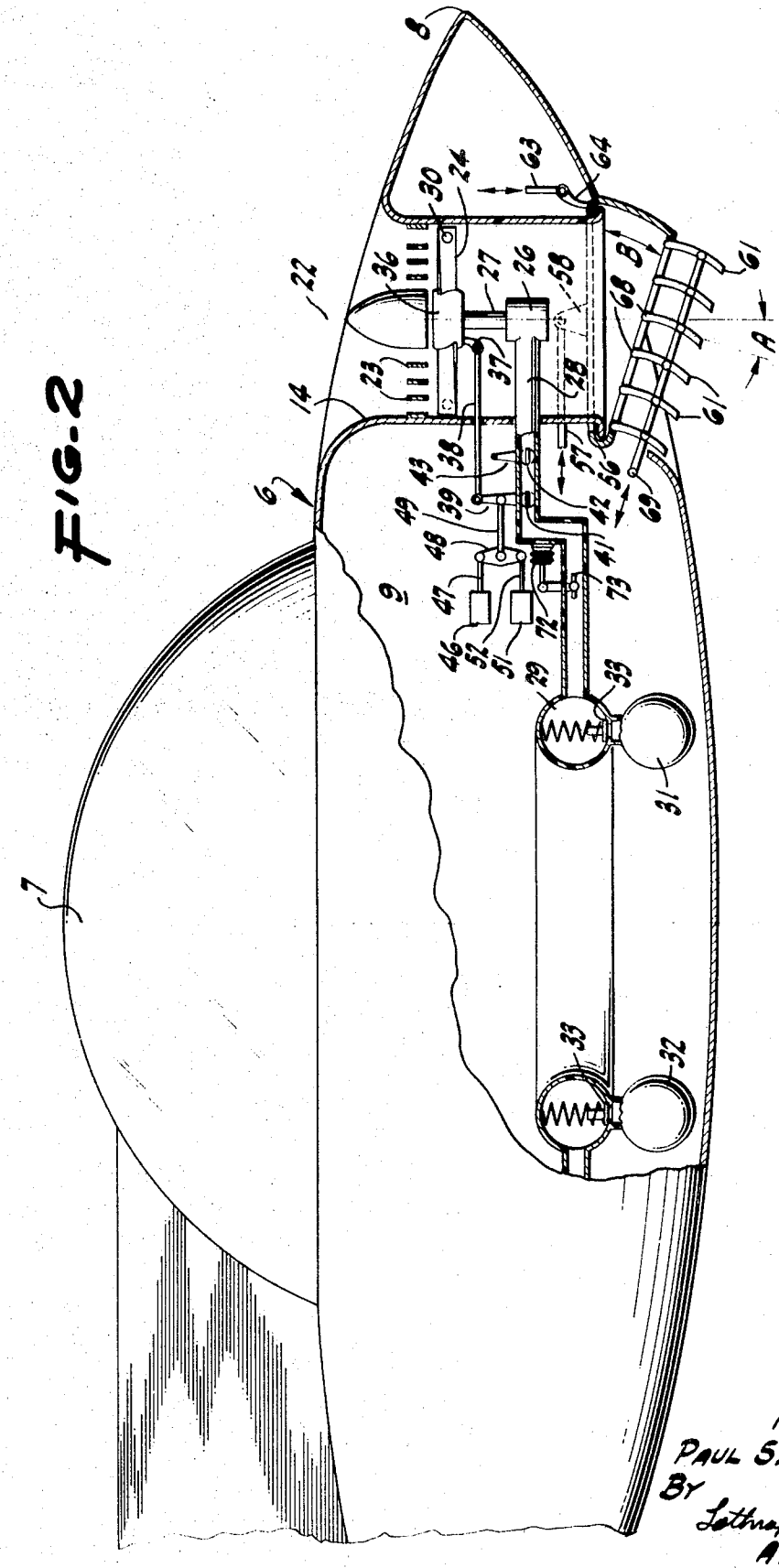

INVENTOR
PAUL S. MOLLER
BY
Lothrop & West
ATTORNEYS

67 || @HighEarthOrbit_ linktr.ee/Grider2

FIG. 3

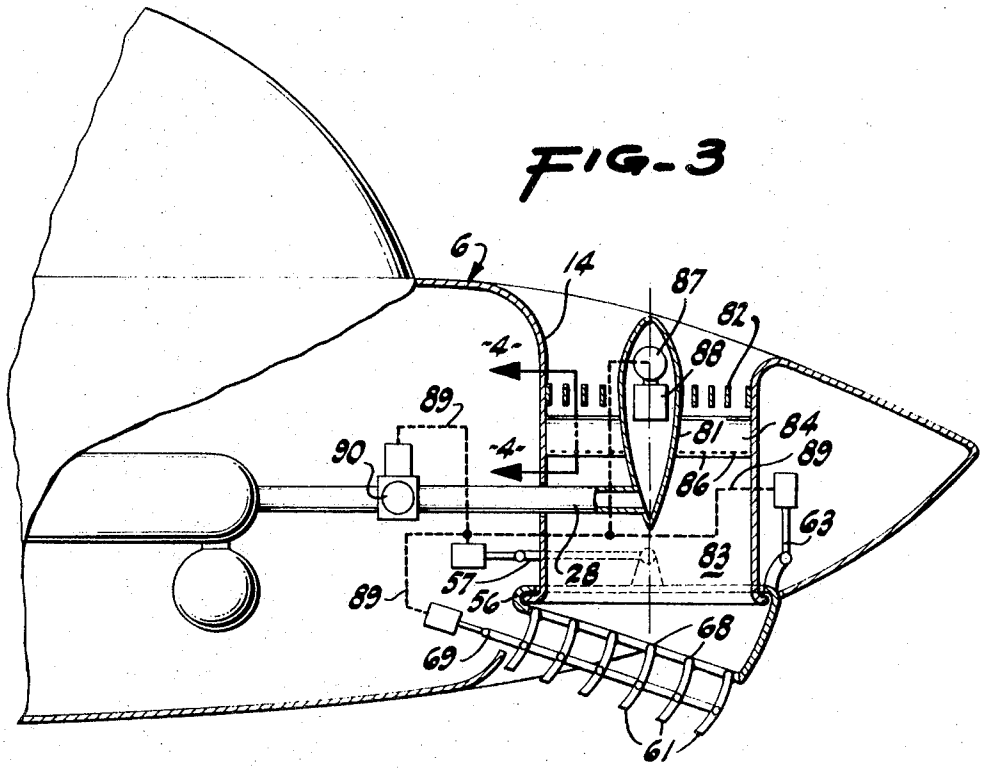

FIG. 4

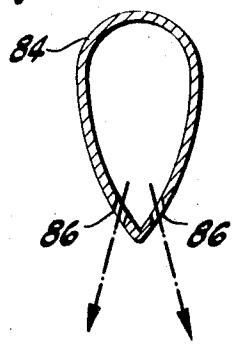

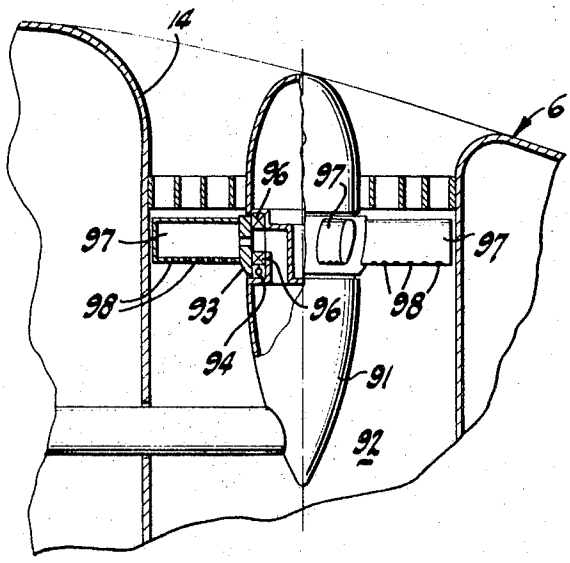

FIG. 5

INVENTOR
PAUL S. MOLLER

BY

Lothrop & West
ATTORNEYS

68 || @HighEarthOrbit_ linktr.ee/Grider2

AIRCRAFT

There is always need for an aircraft which is particularly suitable for certain characters of work, particularly in the relatively light field in which a vehicle is especially adapted to carry payloads around 1,000 pounds and have an air speed around 300 miles per hour. It is likewise a desideratum to afford such a vehicle which is stable, is easily controlled, has high efficiency, and is so constructed as to be safe.

It is therefore an object of the invention to provide an aircraft with the foregoing characteristics and advantages as well as certain others.

Another object of the invention is to provide an aircraft related to the aircraft shown in my U.S. Pat. No. 3,410,507, issued Nov. 12, 1968.

Another object is in general to improve aircraft.

The foregoing and other objects are attained in the invention embodiments described in the accompanying description and illustrated in the accompanying drawings, in which:

FIG. 1 is a diagrammatic plan of an aircraft embodied pursuant to the invention;

FIG. 2 is a diagrammatic, symmetrical cross section, the plane of section being indicated by the line 2—2 of FIG. 1 and having parts broken away for size reduction;

FIG. 3 is a partial cross-sectional view, like FIG. 2, showing diagrammatically an aircraft modified to use thrust augmentors; and

FIG. 4 is a cross section, the plane of which is indicated by the line 4—4 of FIG. 3.

FIG. 5 is a side elevation, portions being broken away of a modified form of thrust augmentor.

While there are many variants possible in embodying the present invention, my present preference is to construct an aircraft substantially in accordance with the particular embodiments disclosed herein.

In this instance the aircraft includes a main body 6 formed as a figure of revolution about a generally vertical main axis 7. The body is a somewhat flattened disc having a rim 8 and a generally hollow interior 9 in which machinery is installed and in which the passengers and other load are housed.

The shape involved is capable of operating at various attitudes and in all directions from the axis 7. For the most part the aircraft is intended to travel in a forward direction as indicated by the arrow 11 of FIG. 1 and so the body is provided with a fore and aft fin member 12 for yaw stability and control.

Pursuant to the invention the disc is provided with a generally circular array of air ducts 13, 14, 15 and 16 on one side and 17, 18, 19 and 20 on the other side. The ducts extend entirely through the disc body 6, each on its individual one of a number of airflow axes 22, all of which are parallel to the main axis 7. The ducts are arranged adjacent to each other in a circle except that in the forward and rearward portions of the body there is left an uninterrupted body area in order to allow for adequate air movement into the base region to prevent aerodynamic base drag. Since the vehicle relies upon air propelled downwardly through the various air ducts and issuing therefrom in the form of jets, I often refer to this aircraft as a "discojet" since it is of a discoid configuration and relies upon jets for its lift.

In the usual construction, all of the ducts are substantially the same in their functioning and mode of operation, and a description of one is intended to apply equally to all of the others.

Since airflow is into the duct 14, for example, (FIG. 1 and FIG. 2) from the top, there is a corresponding opening in the shell of the body 6. The opening is almost immediately screened by entrance vanes 23 acting not only as air guides but likewise as a mechanical barrier to the entry of large foreign material.

Means are provided to induce air to flow downwardly through the ducts. As shown in FIGS. 1 and 2, each duct has mounted therein a propeller 24 or fan designed to rotate around the axis 22 beneath the vane 23. The fan 24 is supported to revolve generally about the axis 22. Each fan is provided with its own drive motor 26 operated by pressure gas

and connected to the fan through an axial shaft 27. The drive motor 26 is diagrammatically illustrated and represents any one of various different forms of driving mechanism. Alternatively, the drive motor 26 can be replaced by tip turbines 30 at the ends of the fan blades, the tip turbines being supplied with the pressure gas that otherwise would supply the motor 26.

In the present instance it is preferred that the motor 26 be operated by hot gas received through a pipe 28. For safety and for other operating reasons the individual motors have individual pipes 28, but each pipe extends to and connects with a generally annular plenum chamber 29 in turn connected to a plurality of hot gas sources 31 and 32. The precise nature of the source of propulsive force is subject to engineering selection and the hot gas generators 31 and 32 are utilized primarily as examples. The arrangement is such that while normally both (or all, if there are more than two) of the gas generators 31 and 32 operate at once and are effective to supply all of the various motors 26, it is still possible for the vehicle to operate if one or a few of the gas motors or generators are disabled. Should that occur, it is desirable to prevent adverse or backflow from the active gas generator or generators into the inactive one. For that reason between each of the gas generators and the plenum there is provided a check valve 33. This is pressure actuated and effectively isolates its own gas generator in the event there is a failure therein.

The plenum 29 is large enough so that all of the pipes 28 are well supplied from the gas generators, the main point being to assure an adequate supply of motive fluid even under adverse conditions.

In the preferred operation, the gas generators supply all of the motors 26 so that all of the fans or propellers 24 operate at substantially the same speed and preferably all in the same direction of rotation. Because of the large number of individual fans or propellers and the distribution of the various pipes with respect to the body, there is not only provided a lift center substantially on the axis 7, but also the amount of angular momentum derived from the operation of all of the fans in one direction is sufficient to provide gyrostabilization. This by itself may be the simplest manner in which to afford sufficient stability of the vehicle, but I contemplate additional or alternative means for this purpose.

For example, the fan 24 may not be mounted directly on the shaft 27 but instead may have a gimbal mounting 36 with respect thereto. Thus, the axis of rotation of the fan can depart by a matter of a few degrees, say 2° or 4° from the axis 22 of the duct. The fan is free to rock to this limited extent in response to various motions of the body 6 in the air. The gimbal motion between the fan and its surroundings is utilized to actuate additional controls for stability.

For one instance, the tilting of the fan is communicated by a connecting lever 37 to a rod 38 which, through an intermediate lever 39, actuates a throttle 41 in the pipe 28 leading to the fan motor 26. When the fan 24 is not in its normal position; that is, does not have its plane of rotation normal to the axis 22, then there is corresponding throttling in the pipe 28, and the motor 26 and the fan 24 are slowed. The throttling effect occurs in each individual pipe in accordance with the response of each individual fan to local disturbing forces. The throttling of an individual pipe slows its own individual fan and results in a redistribution of the hot gases in the plenum 29 so that the other corresponding motors are maintained at speed or may even be increased in speed. This tends to compensate for unwarranted local excursions from the desired attitude of the craft.

Also in the pipe 28 is a shutoff valve 42 controlled by an operator 43 so that, if desired, the motor 26 can be throttled back or can actually be shut down. This is not an automatic control function but is a means for reducing the number of motors and fans in operation.

In addition to the control which is afforded by the gimbal-mounted or rockable fan I provide a trim control 46 which can be manually set to any desired position for relatively long term operation and to afford compensation for any unusual long

69 || @HighEarthOrbit_ linktr.ee/Grider2

term undesired attitude of the craft. The control **46** is connected by a rod **47** to a balance lever **48** joined at its center by a rod **49** to the lever **39**. The operation of the trim control **46** effects a tilting of the fan **24** with respect to its duct and thus provides a correcting component to the attitude of the craft. There can be individual controls such as **46** for each of the fans or adjacent fans can be coupled with a similar control.

In addition to the relatively long term trim control **46**, I also provide a relatively short term trim control **51**. This is joined by a rod **52** to the other end of the balance lever **48** and can independently introduce an attitude correction through the fan **24**. Preferably the manual controller for the long term trim control **46** is an adjustable wheel or the like, whereas the short term trim controller **51** can be connected conveniently to thumb buttons on the control stick for the entire craft. The operator by moving his thumb fore and aft can influence the short term controls related to the fans in the ducts **13** and **16** on one side and **17** and **20** on the other, for example. By moving his thumb sideways he can actuate similar controls connected to the fans **14** and **15** on one side and **18** and **19** on the other. In this way the operator can introduce and remove instantaneous correctional thrust vectors from the individual fans.

As an additional control of the jet issuing from each duct, I provide at the lower end of the duct an adapter **56** in the nature of a ring which can be rotated around the axis **22** by means of a control rod **57** joined to an upstanding anchor **58** on one portion of the adapter **56**. This rod **57** is for the purpose of producing rotation of the adapter **56** about the axis **22** as a center so that a number of diametrically extending parallel vanes **61** can be oriented in any direction desired. In this fashion the craft can be directed forwardly, rearwardly or laterally in either direction. In fact, the control is preferably such that some of the adapters **56** can be directed together in one direction whereas others can be directed in somewhat different directions. For example, at low speeds it is usually arranged that the ducts **14** and **15** on one side and **18** and **19** on the other side are directed substantially backward or aft, and then at high speeds all of the adapters are directed aft so that all of the jets cooperate to propel the craft in the forward direction. At low speeds the adapters not oriented for forward propulsion may be turned slightly to assist in correcting for yaw or for producing maneuvering deviations from a normal straight flight path.

The adapter **56** is additionally provided with a control rod **63** connected to an anchor **64** on the adapter, so that by moving the rod **63** up and down the adapter can be rocked about the interconnection of a flange **66** at the bottom of the duct and an encompassing rim **67** on the adapter. As shown in FIG. **2**, the adapter is in a lower position so that the upper ends of all of the vanes **61** lie in the plane making an angle B with the plane at the bottom of the duct and normal to the axes **22** and **7**. As the rod **63** is raised and lowered the effective cross section of discharge of the jet is varied from its maximum amount when the angle B is zero to its minimum amount when the angle B is as shown in FIG. **2**. Since a maximum jet downward thrust is required for lift, especially initial lift, the maximum cross-sectional area of efflux is then employed by having the angle B zero. On the contrary, for forward flight a considerably less area of efflux is desirable. Then the angle B is made maximum or some large fraction of maximum, so that there is not only a downward but also a rearward component, and so that the area of efflux is considerably less than maximum.

The vanes **61** are in part flexible but at their upstream ends **68** are fixed to the adapter **56**. The flexible downstream vane ends are moved jointly by a control rod **69** movable to and fro. The vanes can be flexed at their trailing ends with respect to the adapter. Since the vanes can be so flexed relative to their fixed ends **68**, they can be bent through various angles A as measured between the axis **22** and the general plane of the vane. In this way, by having the two control rods **63** and **69** it is possible to vary the area of the outlet of the duct and also independently to vary the discharge direction of the vanes. The flexed direction of the vanes **61** is important in altering the direction of efflux of the air. Thus by rotating the adapter **56** through the rod **57**, by rocking the adapter **56** by moving the rod **63** up and down, and by changing the flex angle of the vanes **61** by moving the rod **69** to and fro, it is possible to provide an optimum discharge from each duct and to control the direction of such efflux and its quantity in order to govern the operation of the vehicle.

As a matter of additional safety, in the event one of the motors **26** should fail and should release large quantities of hot gas to the atmosphere or should a pipe **28** similarly fail, I preferably provide in each one of the pipes **28** a pressure-responsive cell **72** connected to a damper **73** in the duct adjacent the plenum **29**. The cell **72** is effective when the pressure within the pipe between the plenum and the motor drops abruptly to close the damper **73** and prevent loss of propulsion gas. Because of the relatively large number of engines, the loss of one is not unduly serious because the propulsive gas which normally would go to it is distributed to the remaining engines and causes them to operate to a somewhat greater effect.

Instead of using propellors or fans as means for inducing airflow through the ducts, I can alternatively use thrust augmentors as shown in FIGS. **3** and **4**. In this instance the construction of the aircraft, unless specially noted, is the same as previously described. In each of the ducts, such as **14**, however, there is provided a streamlined chamber **81** coaxially mounted and having a grid **82**, such as a honeycomb, spanning the annular channel **83** between the body **6** and the chamber **81**. Just beneath the grid **82** is an array of radially disposed pressure gas nozzles **84**. These are all alike and each is a hollow streamlined body having one or more series of jet discharge apertures **86** along or near its lower edge. Each of the nozzles **84** in a particular group is connected to the supply pipe **28** extending to the plenum **29** as a source of pressure gas. The issuance of the numerous gas jets downwardly from the nozzles **84** induces a related downflow of atmospheric air through the duct **14** and in a simple and efficient way affords lift for the vehicle.

Since one of the main aims of the invention is to provide excellent stability and control, it is arranged that the nozzles **84** in any one duct be controlled as an individual group. For example, a number of control gyros **87** can be provided each one being disposed adjacent its respective one of the ducts such as **14**. The gyros **87** are duplicates and each is driven by its own electric motor **88** to afford a highly redundant system. Each gyro **87** through a path **89** exerts control of a flow valve **90** in the pipe **28** to vary the amount of pressure gas supplied to the adjacent nozzles **84** and so controls the resulting amount of thrust. Also, if desired, the control path **89** can be extended to the rods **57** and **63** as well as to the control rod **69**. Thus deviations from the set or desired conditions at each of the ducts, such as **14**, is effective upon the local gyro **87** to provide appropriate and unique compensation.

The thrust augmentors of FIGS. **3** and **4** can be modified, as shown in FIG. **5**, for improved results in many cases. Each duct **14** has a chamber **91** fixed therein and defining an annular channel **92** between the chamber and the body **6**. A nozzle ring **93** is mounted to rotate on the chamber **91** by means of a bearing **94** and is closed by seals **96**. The supply pipe **28** opens into the chamber **91** and gas flows from the chamber through openings in the ring into hollow pressure gas nozzles **97**. The nozzles are inclined so that when gas issues from discharge apertures **98** therein, the nozzles and ring are rotated.

It will be appreciated that since there is a large number of individually operable jet airstreams through the body of the craft, and since each one of the jet streams can be variously controlled, directed and regulated, it is possible to provide an extremely safe and versatile control for the craft. It will also be appreciated that these controls can be interrelated in various different ways, some of the controls being paired, some being individually operable, and some being combined in larger numbers. It is even possible to provide a programmer for virtually all of the controls except for the manual override retained by the operator.

70 || @HighEarthOrbit_ linktr.ee/Grider2

What is claimed is:

1. An aircraft comprising a disclike body that is substantially a figure of revolution about a main axis, a plurality of air ducts extending through said body in a direction parallel to said axis, said ducts being arranged in an arcuate series, a plurality of airflow-inducing means, means for mounting each of said inducing means in a respective one of said ducts for rotation about an airflow axis parallel to said main axis, and in which each of said airflow-inducing means includes a fan connected to power-driving means, means mounting said fan in gimbals to swing freely through a limited range relative to said body, and means responsive to the swinging movement of said fan relative to said body for controlling said power driving means, a plurality of rotary members, means for mounting each of said members on a respective one of said ducts downstream of said inducing means therein and for rotation about said airflow axis, parallel deflector vanes extending transversely of each of said rotary members, and means for deflecting said deflector vanes.

2. An aircraft as in claim 1 in which each of said airflow-inducing means is movable independently of the other airflow-inducing means.

3. An aircraft as in claim 1 including means associated individually with each one of said airflow-inducing means and responsive to shifting of the axis thereof in one plane out of parallelism with said main axis for controlling operation of said one of said airflow-inducing means.

71 || @HighEarthOrbit_ linktr.ee/Grider2

May 26, 1970 G. R. McGUINNESS 3,514,053

AIRCRAFT, ESPECIALLY OF THE VTOL TYPE

Filed Dec. 19, 1967 4 Sheets-Sheet 1

FIG-1

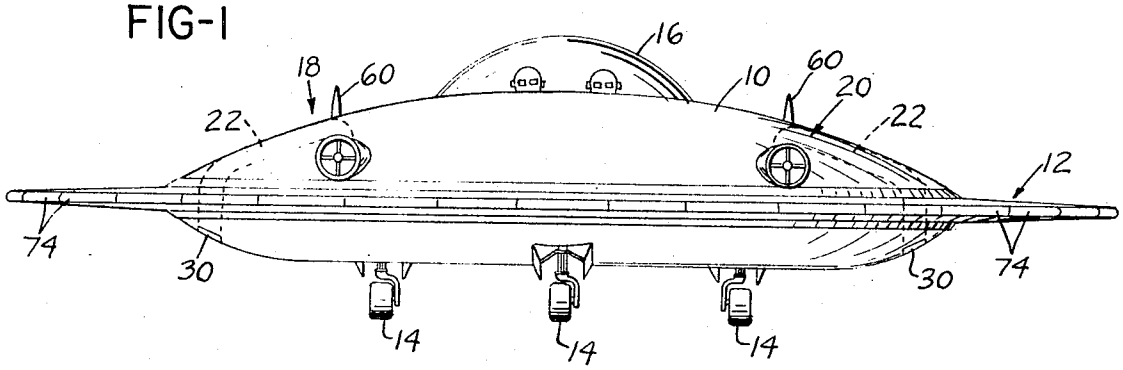

FIG-2

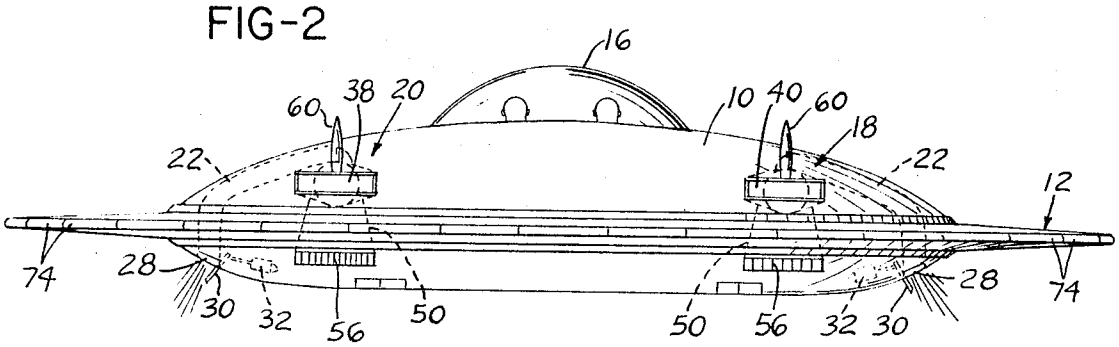

FIG-3

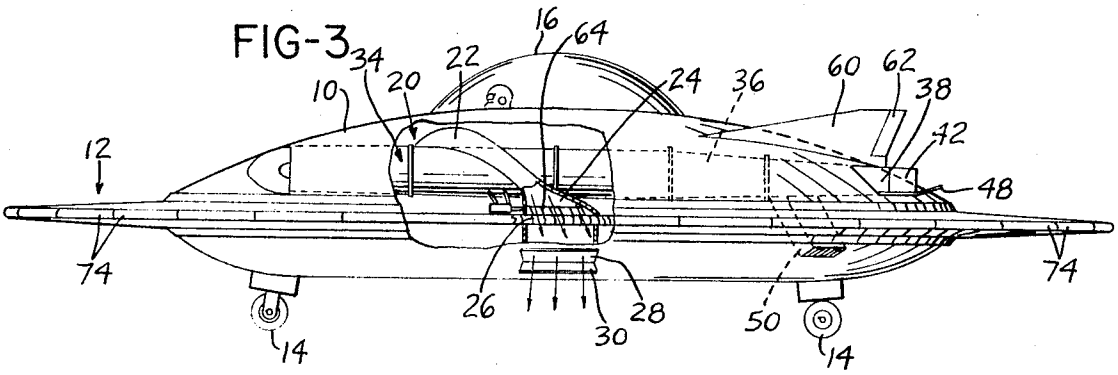

INVENTOR.
Gilbert R. McGuinness
BY
Walter Berky

72 || @HighEarthOrbit_ linktr.ee/Grider2

AIRCRAFT, ESPECIALLY OF THE VTOL TYPE

Filed Dec. 19, 1967 4 Sheets-Sheet 2

FIG-4

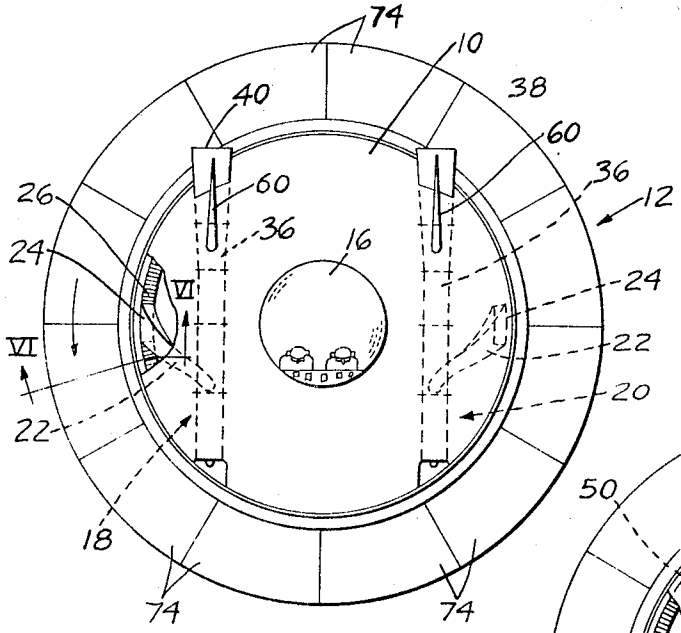

FIG-5

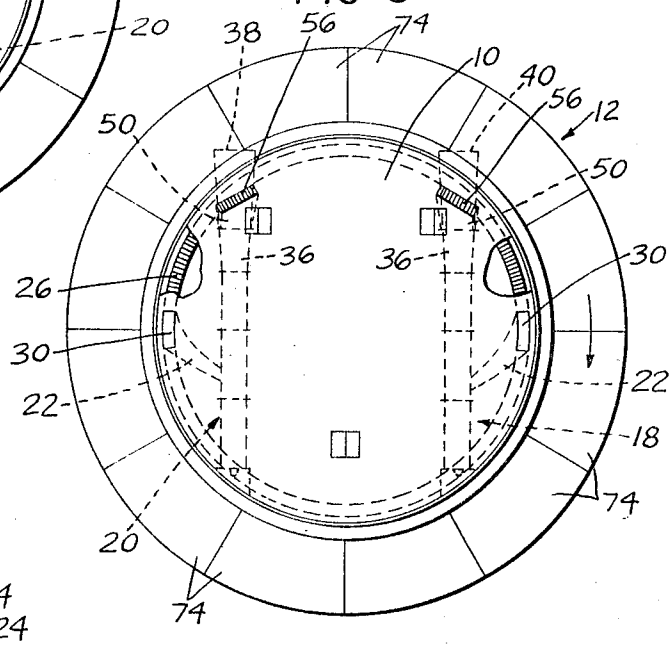

FIG-7

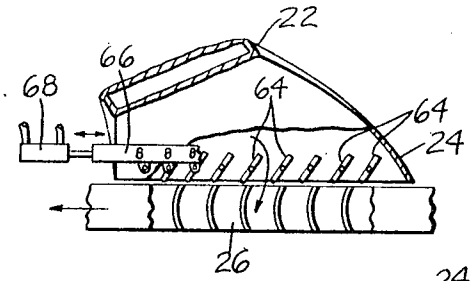

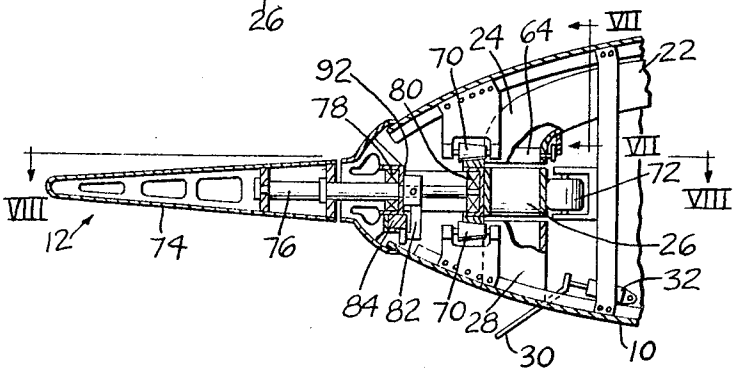

FIG-6

INVENTOR.

Gilbert R. McGuinness

BY

Walter Berky.

73 || @HighEarthOrbit_ linktr.ee/Grider2

May 26, 1970 G. R. McGUINNESS 3,514,053

AIRCRAFT, ESPECIALLY OF THE VTOL TYPE

Filed Dec. 19, 1967 4 Sheets-Sheet 3

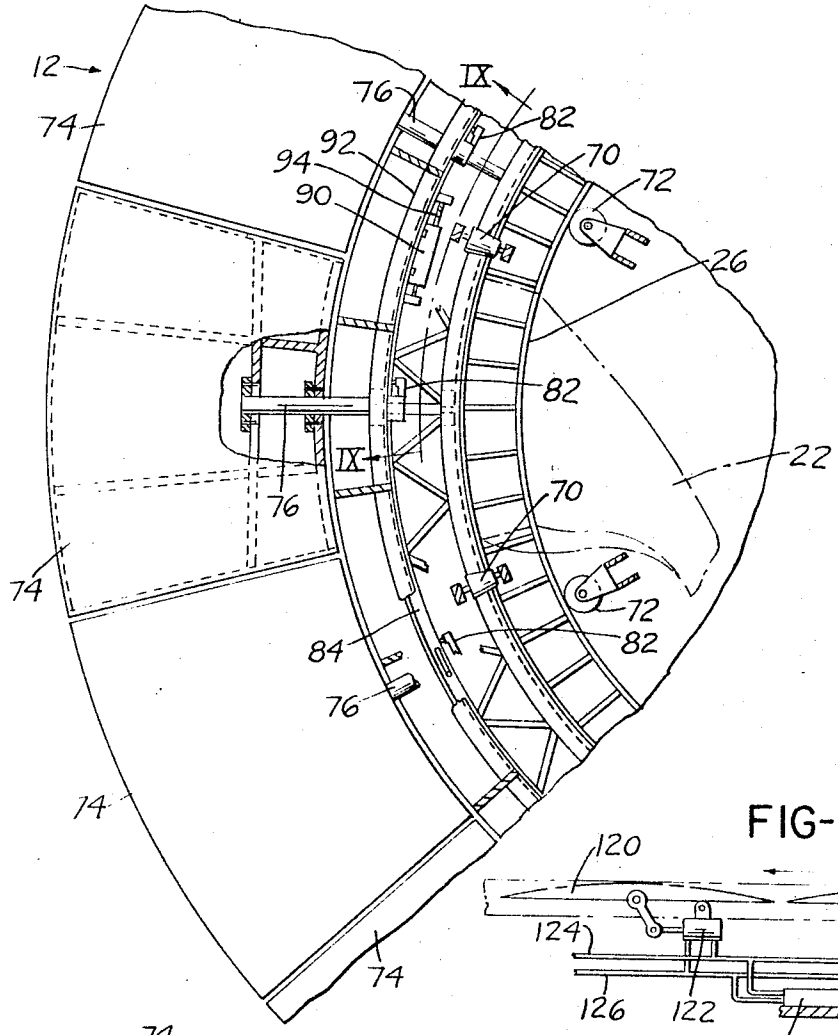

FIG-8

FIG-11

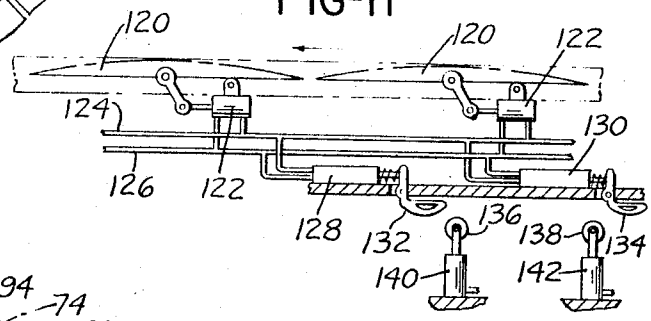

FIG-9

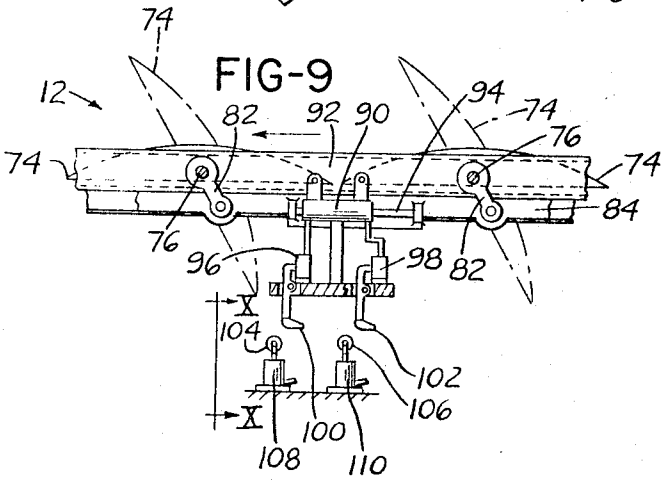

FIG-10

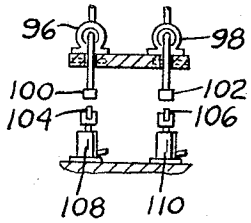

INVENTOR:
Gilbert R. McGuinness
BY
Walter Berky

74 || @HighEarthOrbit_ linktr.ee/Grider2

May 26, 1970 G. R. McGUINNESS 3,514,053

AIRCRAFT, ESPECIALLY OF THE VTOL TYPE

Filed Dec. 19, 1967 4 Sheets-Sheet 4

FIG-12

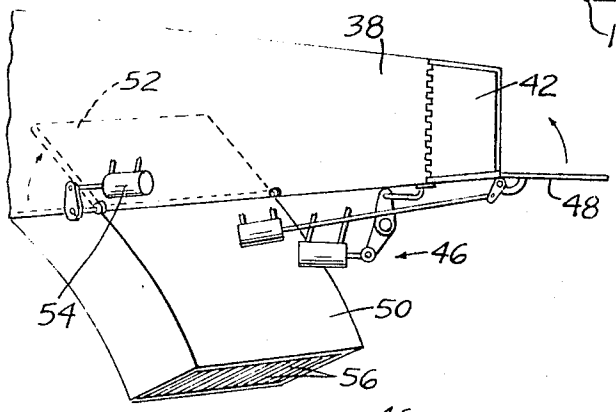

FIG-15

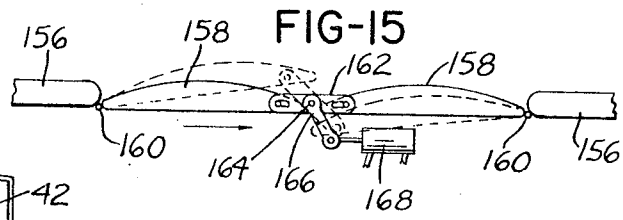

FIG-16

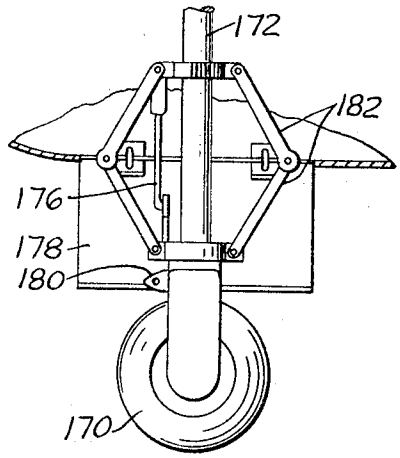

FIG-13

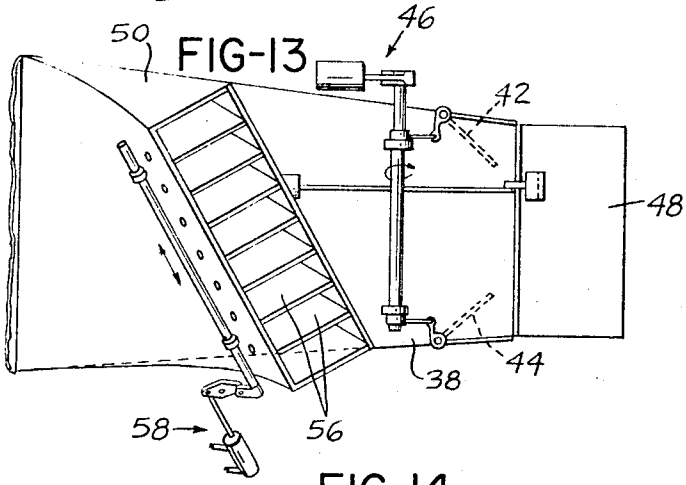

FIG-14

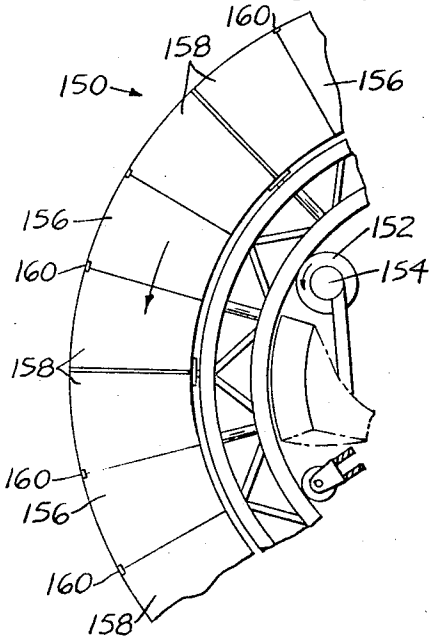

FIG-17

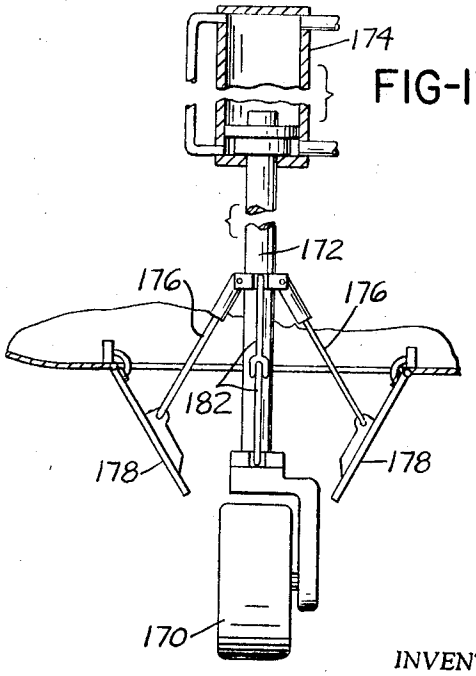

INVENTOR.
Gilbert R. McGuinness
BY
Walter Duby

75 || @HighEarthOrbit_ linktr.ee/Grider2

United States Patent Office

3,514,053
Patented May 26, 1970

1

3,514,053

AIRCRAFT, ESPECIALLY OF THE VTOL TYPE

Gilbert R. McGuinness, 1596 Oakland Ave.,
Dayton, Ohio 45409

Filed Dec. 19, 1967, Ser. No. 691,755
Int. Cl. B64c *15/06*
U.S. Cl. 244—12 6 Claims

ABSTRACT OF THE DISCLOSURE

Aircraft, especially of the VTOL type, in which a disc-like fuselage has a bladed rotor concentrically mounted thereon in surrounding relation thereto with engine means in the fuselage for driving said rotor on the fuselage and for developing forward and maneuvering thrusts on said aircraft; the blades of said rotor extending radially and being tiltable on respective axes which extend radially.

This invention relates to aircraft, and is particularly concerned with a vertical take-off and landing aircraft, commonly referred to as a VTOL type aircraft.

More particularly still, the present invention relates to an aircraft of the general type referred to which has novel lifting means associated therewith and includes novel means for controlling the aircraft in flight.

The present invention is particularly concerned with an aircraft substantially disc-like in shape when viewed from above and having a bladed ring-like rotor extending about the periphery thereof which is supported on the aircraft fuselage and is driven in rotation thereon to impart vertical lift to the aircraft. The main body portion or fuselage of the aircraft is located inside the rotor and supports the rotor on bearings and comprises passenger and cargo space and also embodies engine means to provide power for rotating the rotor on the fuselage and also for providing power to impart horizontal thrust to the aircraft. Maneuvering of the aircraft in flight is accomplished, at least in part, by motive power derived from the aforementioned engine means in the form of jets or directed discharge of air.

A particular object of the present invention is to provide a novel type aircraft, particularly a VTOL type aircraft having a new type of lift means associated therewith.

Another object of the present invention is to provide an aircraft of the type referred to above which is extremely maneuverable.

Still another object of this invention is the provision of an aircraft of the type above referred to which is relatively compact.

The foregoing objects as well as still other objects and advantages of the present invention will become more apparent upon reference to the following detailed specification, taken in connection with the accompanying drawings, in which:

FIG. 1 is a front elevational view of the aircraft, according to the present invention, resting on the ground;

FIG. 2 is a rear elevational view of the aircraft as it appears in flight;

FIG. 3 is a side elveational view of the aircraft resting on the ground and partially broken away to show a detail thereof;

FIG. 4 is a top plan view of the aircraft partly broken away to show details of construction;

FIG. 5 is a bottom plan view of the aircraft broken away to show details of construction;

FIG. 6 is a sectional view indicated by line VI—VI on FIG. 4 and drawn at somewhat enlarged scale and

2

illustrating the arrangement for tilting the blades of the bladed rotor of the aircraft;

FIG. 7 is a sectional view indicated by line VII—VII on FIG. 6 and showing adjustable inlet blades forming a part of an air turbine for driving the blade rotor.

FIG. 8 is a sectional view indicated by line VIII—VIII on FIG. 6 and showing the blade rotor and parts pertaining thereto;

FIG. 9 is a somewhat schematic view showing actuating means for tilting the blades of the blade rotor;

FIG. 10 is a view looking in on line X—X on FIG. 9 showing the arrangement of the actuating means of FIG. 9;

FIG. 11 is a view showing a modification of the rotor blade adjusting mechanism;

FIG. 12 is a somewhat diagrammatic view showing the discharge end of one of the jet engines of the aircraft and illustrating control flaps pertaining thereto;

FIG. 13 is a view looking up from the bottom of FIG. 12;

FIG. 14 is a view like FIG. 8 but shows a different drive for the blade rotor;

FIG. 15 is a view similar to FIG. 11 but shows a different arrangement of the blades of the rotor;

FIG. 16 is a view showing a wheel of the landing gear of the aircraft; and

FIG. 17 is a view looking in from the left side of FIG. 16.

Referring to the drawings somewhat more in detail, and with particular reference to FIGS. 1 through 5, the aircraft comprises a central disc-like fuselage portion **10** and a bladed rotor **12** supported for rotation on the said fuselage. The fuselage may be provided with recesses on the bottom having doors for receiving retractable landing gear wheels **14**. The fuselage is preferably substantially flat on the bottom but is arcuate on top and in the center has a passenger compartment which may be covered by the transparent dome member **16**. The greater thickness of the fuselage above bladed rotor **12** permits the mounting in the upper portion of the fuselage of a pair of jet engines **18** and **20** each of which engines comprises an engine part proper toward the rear and a compound compressor toward the front.

As will be seen in FIGS. 1 through 5, each compound compressor has a discharge duct **22** leading therefrom to a nozzle **24** which is positioned over an air turbine **26** which is fixed to the blade ring **12**. It will be evident that air blown through ducts **22** by the respective compound compressor, will actuate air turbine **26** and thereby cause bladed rotor **12** to rotate on the fuselage.

On the opposite side of the air turbine **26** from nozzle **24** is a discharge nozzle means **28** through which the air exhausted from the turbine passes. The discharge nozzle means **28** advantageously open in a downward direction thereby assisting in imparting lift to the aircraft. Furthermore, a tiltable flap **30** is associated with each discharge nozzle means **28** and has a pertaining actuating motor **32** connected thereto so that the positions of the respective flaps can be adjusted thereby to deflect the discharge from exhaust nozle means **28** more or less in the lateral direction.

The provision of the control flaps **30** permits the air discharged from the discharge nozzle means **28** to be employed for controlling the aircraft while in flight.

Each of the aforementioned engine means **18** and **20**, generally referred to heretofore, will be seen in FIGS. 3, 4 and 5 to comprise a compound compressor portion **34** toward the front and which compressor supplies duct **22** and a more or less conventional jet engine portion **36** toward the rear. Each jet engine portion discharges toward the rear of the aircraft through a respective dis-

76 || @HighEarthOrbit_ linktr.ee/Grider2

charge opening **38, 40** as will be seen in FIGS. 2, 4 and 5. The discharge from the engine discharge jets provides the aircraft with forward thrust.

Turning for the moment to FIGS. 12 and 13 it will be seen that each of the openings **38** and **40**, opening **38** being illustrated in FIGS. 12 and 13, has vertical flaps **42** and **44** pertaining thereto which can be tilted inwardly and outwardly by an actuator mechanism generally indicated at **46** thus to vary the area of the discharge opening of the jet engine. Furthermore, pivoted to the discharge member for the respective jet engine and rearwardly of flaps **44** is another flap **48** which can be tilted upwardly in the blast from the jet engine so as to deflect the said jet in the upward direction, thereby developing a downward force on the rear of the aircraft. By the manipulation of the flaps **42, 44** and **48** pertaining to the two jet engines substantially full maneuverability of the craft can be had particularly when employed in connection with the aforementioned flaps **30** pertaining to the discharge nozzle means associated with the rotor drive turbine.

For still further control of the aircraft, each of the jet engines near its discharge end has a generally downwardly directed discharge member **50**. Discharge from either jet engine can be variably diverted into the respective discharge member **50** by manipulation of a flap **52** which is under the control of an actuator **54**. When flap **52** is raised upwardly from the position wherein it closes the inlet end of member **50**, some of the discharge from the pertaining jet engine will be diverted downwardly through the respective discharge opening **50** and develop a generally downwardly directed blast which will exert an upward force on the aircraft in the region of the respective discharge member. Direction can be imparted to the blast from the respective discharge members **50** by the tiltable blades **56** arranged in each discharge member **50** and under the control of actuating means generally indicated at **58**. This last mentioned control of the blast from the respective discharge members **50** is more or less laterally of the aircraft so as to impart turning forces thereon.

Suitable controls not illustrated in the application can be provided for causing the flaps or vanes **56** in the two discharge members **50** to operate in unison or individually and cause them to move either in the same direction or opposite directions depending on what particular motion of the aircraft is desired at the moment.

The fuselage preferably has stabilizer means **60** of which there may be one on top of the fuselage in the region of the discharge end of each of the turbines. These stabilizers may be substantially conventional in construction and may include tiltable flap means as at **62** to permit control of the flight of the aircraft in a conventional manner.

Turning now to FIG. 6, which is a section indicated by line VI—VI on FIG. 4, the end of air supply duct **22** will be seen where it supplies air to the air turbine **26**. FIG. 6 will also show the discharge nozzle means **28** for the air turbine, the flap **30** pertaining to the discharge means, and the actuator **32** for the flap. FIG. 6 will also show that the extreme discharge end of duct **22** embodies tiltable vanes **64** for imparting direction to the air discharged from duct **22** to the blades of air turbine **26**. Vanes **64**, as will be seen in FIG. 7, are angularly adjustable in the end of duct **22** by means of an actuating mechanism comprising a bar **66** and an actuating motor **68**.

FIG. 6 will also show that the rotor **12** is mounted on fuselage **10** by means of at least one set of guide rollers or bearing means **70** and a second set of guide rollers or bearing means **72**. Many bearing arrangements are possible for rotatably supporting the rotor on the fuselage and the particular ones illustrated in FIG. 6 are merely exemplary of many different arrangements that could be used for this purpose.

FIGS. 4 and 5 will show that the rotor comprises a plurality of blades **74** each of which is in the form of a sector and with the sectors arranged in end to end relation to make up the annular angular configuration illustrated.

According to the present invention, each of the blades **74** is tiltable on a respective support shaft, extending radially of the rotor, to vary the angle of attack of the respective blade and thereby to vary the lift imparted to the aircraft by the rotor as it is driven in rotation.

FIG. 6 will show a respective blade **74** mounted on a respective shaft **76** extending radially of the rotor and fuselage and rotatably supported in bearings **78** and **80**. Each shaft **76** preferably has an arm **82** attached thereto so that the angularity of the blade mounted on the respective shaft can be adjusted by actuation of the arm.

The construction above described in detail is illustrated in FIGS. 6, 7 and 8.

FIGS. 6 and 8 will also show that the structure includes an annular adjusting ring **84** which pivotally engages all of the arms **82** so that adjustment of ring **84** will simultaneously adjust all of the blades **74** and in the same direction and by equal amounts.

Adjustment of ring **84** may be effected by the arrangement shown in FIGS. 9 and 10 wherein a double acting hydraulic motor **90** is provided having a cylinder attached to member **92** forming a part of the rotor frame and having a piston portion connected by rod means **94** with adjusting ring **84**. Connected to the opposite ends of the cylinder of the hydraulic motor are the pumps **96** and **98** which may be of any desired type but which, advantageously, are small simple pumps capable of delivering in one direction only and each having a reciprocating element therein which causes discharge of fluid from the respective pump when actuated. Pumps **96** and **98** are mounted on the frame of the rotor so as to move therewith and there is likewise pivotally mounted in the frame of the rotor a respective pivoted actuating lever **100, 102** for each of the pumps **96, 98**.

The actuating levers are adapted for actuation by respective actuating elements **104, 106** which are stationary in the fuselage of the aircraft and each of which has associated therewith a respective cylinder **108, 110**. The respective actuating elements are moveable from retracted position outwardly into the paths of the respective actuating levers by a supply of pressure fluid to the respective cylinders **108, 110**.

As will be seen in FIG. 10, which is a view taken looking parallel to the direction of movement of the pumps **96, 98** and their respective actuating levers **100, 102**, it will be seen that each moves in its own individual path and that the actuating elements **104, 106** and their respective cylinders **108, 110** are located in alignment with the paths of the actuating levers. The actuating levers can thus be selectively actuated thereby to move adjusting ring **84** in one direction or the other as may be desired.

By the simple expedient described, the blades of the rotor can be adjusted while the rotor is rotated thereby to vary the lift on the aircraft according to whatever is required under the circumstances.

FIG. 11 shows a modification wherein each blade **120** of the rotor has its own adjusting motor **122**. Each motor **122** is of the double acting type and respective conduits **124** and **126** are connected to respectively opposite sides of each motor. A reciprocating pump, substantially of the same type as previously mentioned is connected to each of conduits **124** and **126**. These pumps are shown at **128** and **130** and each thereof, when actuated, will bring about a supply of fluid to the pertaining one of conduits **124, 126** while withdrawing fluid from thereof. By actuating one of pumps **128**, the blades **120** are rotated in one direction, whereas, by actuating the other of the said pumps, the blades are caused to be adjusted in the opposite direction.

As before, each pump **128, 130** has a respective actuating lever **132, 134** and each group of the actuating levers

77 || @HighEarthOrbit_ linktr.ee/Grider2

has associated therewith a respective actuating element **136, 138** and each of the said actuating elements is selectively moveable into effective lever actuating position by a supply of fluid under pressure to a respective cylinder **140, 142.** The levers **132, 134** and the actuating arrangements therefor are, of course, arranged in individual paths movement as illustrated in FIG. 10 so that the pumps are selectively actuatable. The actuating elements **136, 138** and their respective cylinders **140, 142** are, as before, stationarily mounted on the fuselage of the aircraft.

In the first described modification, the rotor was driven by an air turbine but FIG. 14 shows that a rotor **150** could be driven in rotation on the fuselage by a gear or friction disc **152** which is, in turn, driven by clutch **154** which derives motive power from one or the other of the jet engine installations either through a pneumatic or hydraulic or a mechanical medium.

FIG. 14, taken together with FIG. 15 also shows a modification of the rotor construction wherein the rotor has mounted in circumferentially spaced relation thereabout stationary segments **156** and disposed between each pair of adjacent segments **156** is a pair of blades **158** which are pivoted to the respective stationary segments **156** as by hinges **160.**

As will be seen in FIG. 15, the adjacent edges of the blades **158** are interconnected by an arm **162** pivoted at **164** to the rotor frame and having a pin and slot connection at each end to the respective blade. An actuating lever **166** is connected with arm **162** and has an actuating motor **168** connected thereto. A reversible supply of fluid to motor **168** will cause movement of lever **166** and rotation of arm **162** and will thus bring about simultaneous adjustment of the blades connected thereto to vary the angle of attack thereof.

All of levers **166** could be interconnected by a ring, such as was described in connection with the first modification, or each of the said levers could have its own actuating motor, or each actuating motor could serve to actuate several levers at one time. Preferably, a single ring is provided for actuating all of the levers **166** at one time so that equal adjustment of all of the rotor blades is had in response to any adjusting impulse.

FIGS. 16 and 17 illustrate, somewhat schematically, a typical landing wheel arrangement. These figures show a landing gear wheel **170** carried on a column **172** which at its upper end is connected with a retracting and advancing motor **174.** Each column **172** has pivoted thereto adjustable links **176** which serve to actuate the closure doors **178** for the wells in which the wheels are disposed when retracted.

The wheel illustrated in FIGS. 16 and 17 may also have a towing lug **180** on one side thereof and may, furthermore, have linkage **182** which can be employed in connection with the steering of the wheel.

It will be evident that a torque will be exerted on the fuselage as the bladed rotor is driven but this torque can be compensated by controlling the discharge from the respective jet engines so that the fuselage can always be oriented in the desired manner.

The aircraft according to the present invention is quite simple in operation.

In vertical take-off, the torque exerted on the rotor is counterbalanced by directing the engine discharge in a direction to develop an equal counter torque. The counter torque can be developed by adjustment of flaps **42** or by adjustment of vanes **56** in discharge outlets **50.**

During lift-off cold-air exhaust is controlled with directional closure doors for side movement and side attitude with assistance from the hot-air directional fins **56** in the downward flow exhaust **50** or by rotating fuselage thereby directing exhaust nozzles **38.**

For level flight, the rotor blades may be placed in autorotation for autogyro performance or locked in position at a zero collective pitch for fast Mach number speeds. The level flight is maintained by aerodynamic lift designed into fuselage and angle of attack of entire craft. The hot-air exhaust baffle **52** is placed in the level flight position which directs the engine exhaust thru the main nozzles **38** whose exhaust area is adjustable by opening and closing side baffles **42.** Forward direction is controlled by the use of rudders **62** and by engine thrust utilized by changing engine speeds.

For climb and diving angles in the level flight position the downward exhaust **50** and horizontal main exhaust baffles **48** change the attitude.

For descent, the craft is brought to a slow speed and the cold-air ducts are opened. The direction may be controlled by rotating fuselage which may be changed thru 360° during flight. The craft may be landed with power off with the autorotation capabilities of the rotor which utilizes the stored energies.

Larger craft can utilize in flight engine repair or even engine rooms. Reverse thrust engines can also be used for counter torque and fuselage rotation.

It will be understood that this invention is susceptible to modification in order to adapt it to different usages and conditions and, accordingly, it is desired to comprehend such modifications within this invention as may appear to those skilled in the art.

What is claimed is:

1. An aircraft having a disc-like fuselage, a rotor concentrically surrounding said fuselage and rotatably supported thereon, blades on said rotor tiltable thereon about axes radial to the rotor, jet engine means in the fuselage, compressor means driven by said jet engine means, an air turbine fixed to said rotor and including exhaust air discharge means on the bottom of the fuselage to discharge the exhaust air in the downward direction, control flap means on said discharge means adjustable to impart a lateral component of velocity to the discharged air, and power transmitting means operatively connecting the engine means with the rotor for driving the rotor in rotation on the fuselage, said power transmitting means comprising duct means receiving air under pressure from said compressor means and discharging air to said turbine in driving relation thereto.

2. An aircraft according to claim **1,** in which said duct means includes vane means adjustable alternately to increase and decrease lateral thrust therein at the end adjacent said turbine.

3. An aircraft according to claim **1,** in which the jet engine means comprises a jet engine on each side of the longitudinal axis of the aircraft, said compressor means comprising a compressor driven by each engine, said duct means comprising a duct leading from each compressor to a respective region of the turbine on a respective lateral side of the aircraft, said discharge means comprising a discharge duct in each said region of the turbine and each discharge duct having a respective control flap.

4. An aircraft according to claim **1** in which the fuselage includes a passenger compartment located in the center of the upper portion thereof.

5. An aircraft having a disc-like fuselage, a rotor concentrically surrounding said fuselage and rotatably supported thereon, blades on said rotor tiltable thereon about axes radial to the rotor, engine means in the fuselage and comprising a jet engine on each side of the longitudinal axis of the aircraft having a discharge nozzle means at the rear of the fuselage, flap means pertaining to said nozzle means and adjustable to vary the width and direction of the discharge therefrom, power transmitting means operatively connecting the engine means with the rotor for driving the rotor in rotation on the fuselage, a discharge duct connected to each engine upstream from the discharge nozzle thereof and directed generally downwardly, and a control vane at the inlet end of each discharge duct movable from position to close the said inlet end into position to divert at least a portion of the engine discharge into the discharge duct.

78 || @HighEarthOrbit_ linktr.ee/Grider2

6. An aircraft according to claim 5, which includes tiltable vanes in each discharge duct near the exit end thereof and selectively tiltable to control the amount of the lateral component of velocity in the discharge from the respective discharge duct.

References Cited

UNITED STATES PATENTS

2,863,621	12/1958	Davis	244—23
2,935,275	5/1960	Grayson	244—23
2,947,496	8/1960	Leggett	244—12
3,045,951	7/1962	Freeland	244—23
3,372,892	3/1968	May et al.	244—102

FOREIGN PATENTS

678,700	1/1964	Canada.

MILTON BUCHLER, Primary Examiner

J. E. PITTENGER, Assistant Examiner

U.S. Cl. X.R.

244—23

79 || @HighEarthOrbit_linktr.ee/Grider2

US006698685B2

(12) **United States Patent**
Walmsley

(10) **Patent No.: US 6,698,685 B2**
(45) **Date of Patent: Mar. 2, 2004**

(54) **CIRCULAR VERTICAL TAKE OFF AND LANDING AIRCRAFT**

(76) Inventor: **Eric Ronald Walmsley**, 21, Howard Crescent, Seer Green, Beaconsfield Bucks HP92XR (GB)

(*) Notice: Subject to any disclaimer, the term of this patent is extended or adjusted under 35 U.S.C. 154(b) by 152 days.

(21) Appl. No.: **10/084,749**

(22) Filed: **Feb. 26, 2002**

(65) **Prior Publication Data**

US 2003/0127559 A1 Jul. 10, 2003

(51) **Int. Cl.**[7] **B64C 39/06**
(52) **U.S. Cl.** ..... **244/23 C**
(58) **Field of Search** ..... 244/12.2, 23 C, 244/73 B, 73 C, 51, 52, 55, 23 A, 23 B, 12.3

(56) **References Cited**

U.S. PATENT DOCUMENTS

3,048,353 A * 8/1962 Holmes ..... 244/23 R
3,442,469 A * 5/1969 Davis 244/12.2
3,503,573 A * 3/1970 Modesti 244/12.2
3,568,955 A * 3/1971 McDevitt ..... 244/23 D
3,640,459 A * 2/1972 Jaeger ..... 244/23 C
4,312,483 A * 1/1982 Bostan 244/12.2
6,270,036 B1 * 8/2001 Lowe, Jr. 244/12.2

FOREIGN PATENT DOCUMENTS

CA 750805 * 1/1967 ..... 244/12.2

* cited by examiner

Primary Examiner—Galen L. Barefoot

(57) **ABSTRACT**

A circular VTOL aircraft with a central vertically mounted jet or rocket engine **7**, (or engines) having below vertical thrust vents **14** at cardinal points, together with a jet/rocket engine **20** (or engines) horizontally mounted on turntable pod **16** which is steerable through 360 degrees and centrally situated below the vertical engine (s). Alternatively the horizontal engine can be replaced by central thrust vent **36** delivering thrust from the vertical engine to vectored thrust nozzle **37** attached to the turntable. Thrust from the four vertical thrust vents is controlled by valves **21** giving VTOL thrust control as well as pitch and bank control. The horizontal engine provides acceleration and retro-thrust for horizontal flight and directional control through 360 degrees. The passenger cabin is situated in the main body of the aircraft. Fuel tanks are installed around the central engines. The flight-deck is situated at the top-centre of the craft above the engines, which are detachable for maintenance.

7 Claims, 6 Drawing Sheets

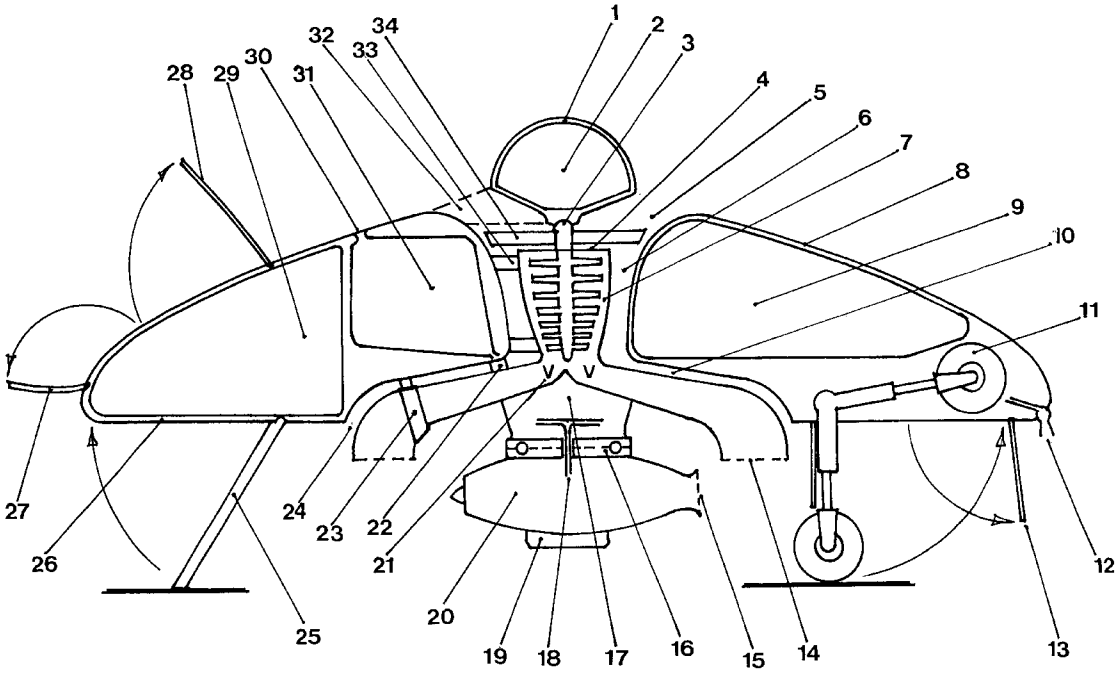

80 || @HighEarthOrbit_ linktr.ee/Grider2

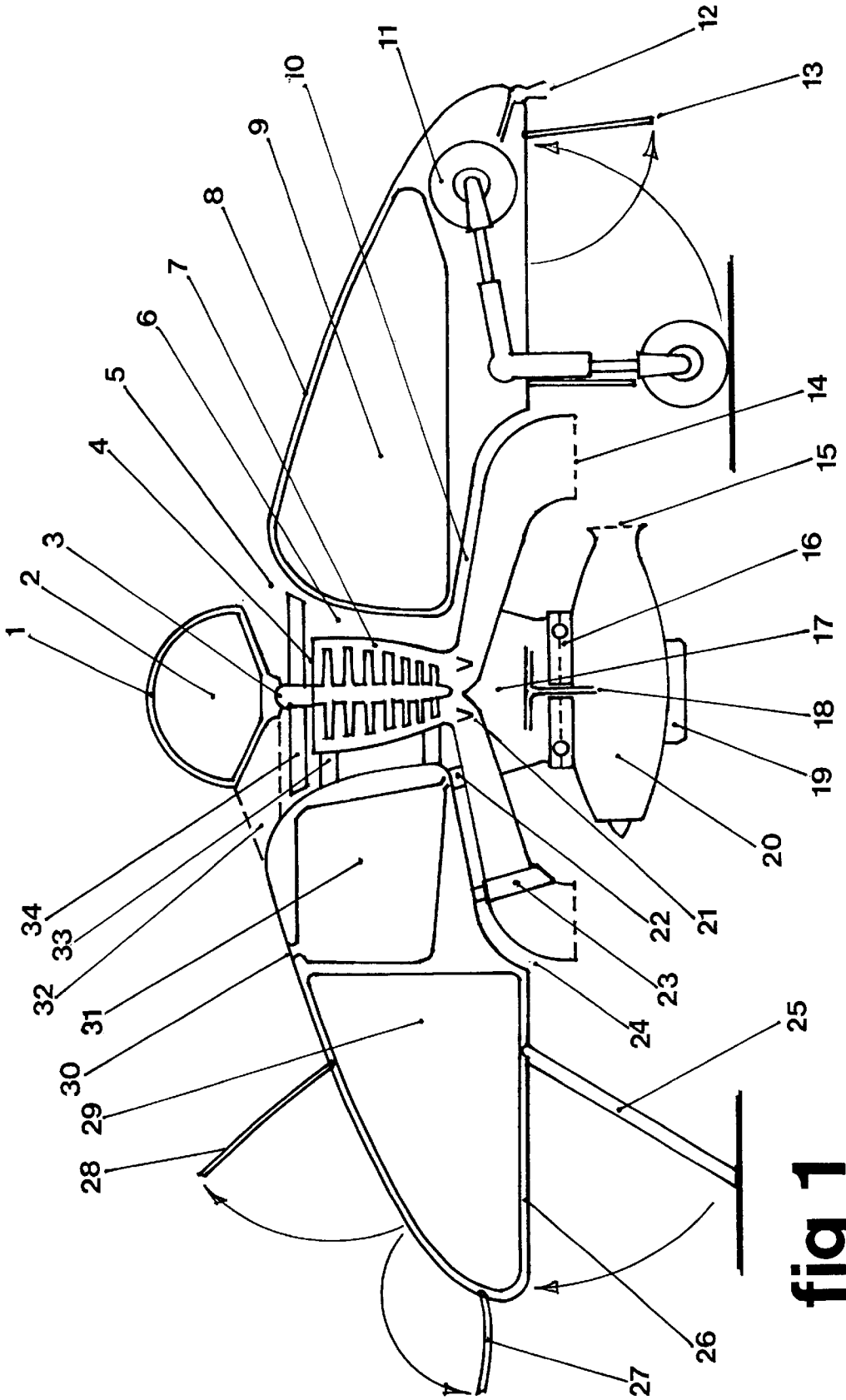

fig 1

81 || @HighEarthOrbit_ linktr.ee/Grider2

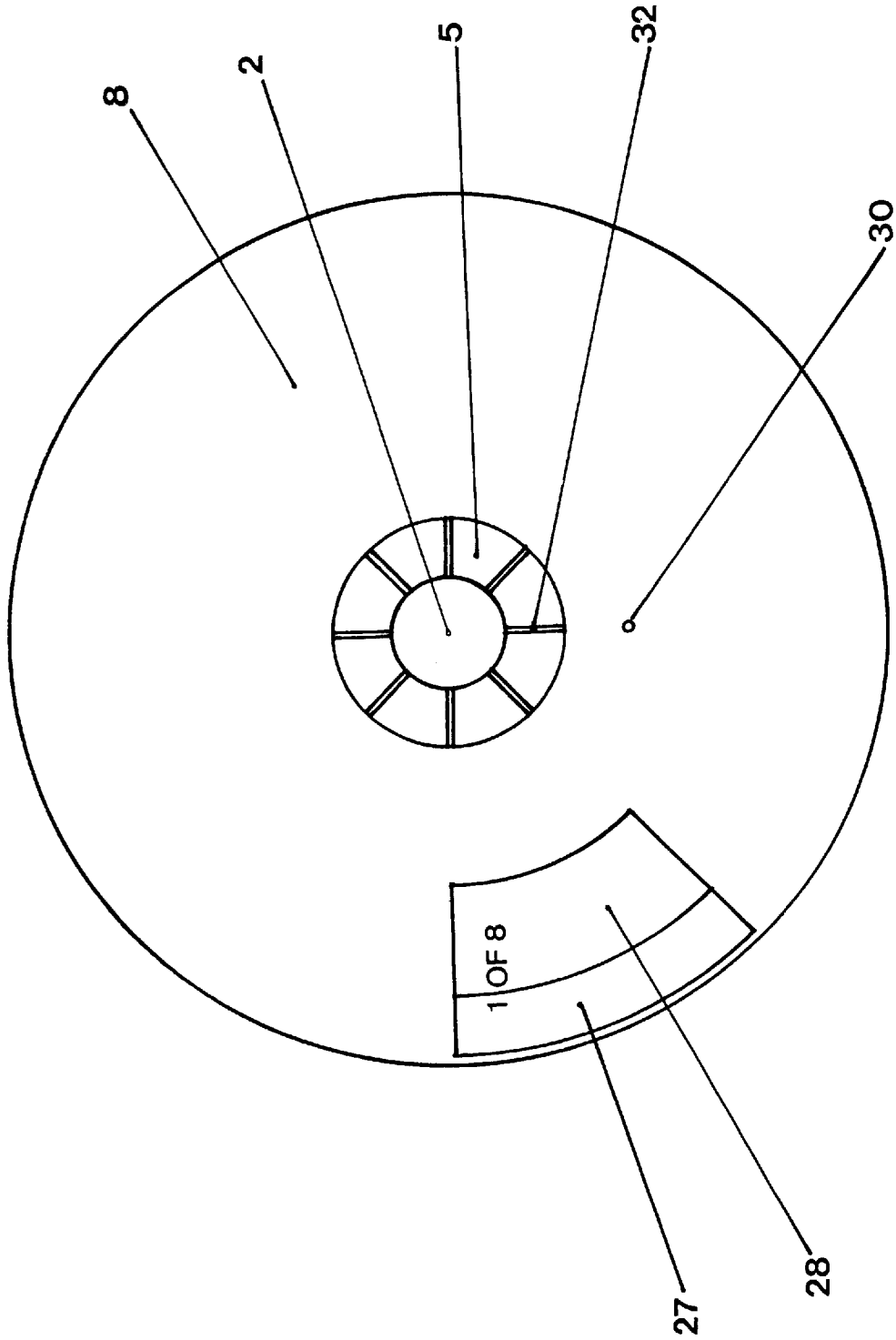

fig 2

82 || @HighEarthOrbit_ linktr.ee/Grider2

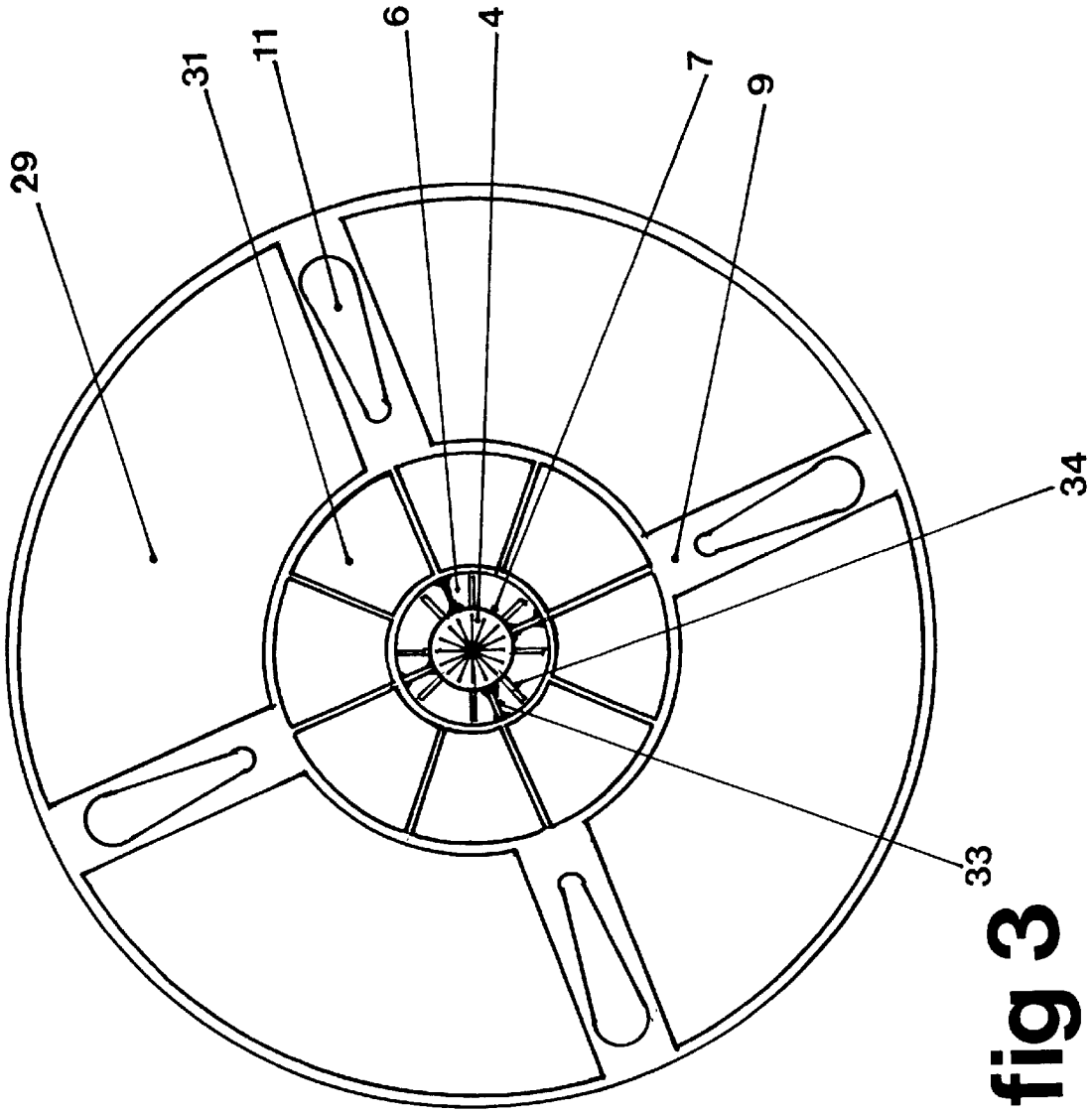

fig 3

83 || @HighEarthOrbit_ linktr.ee/Grider2

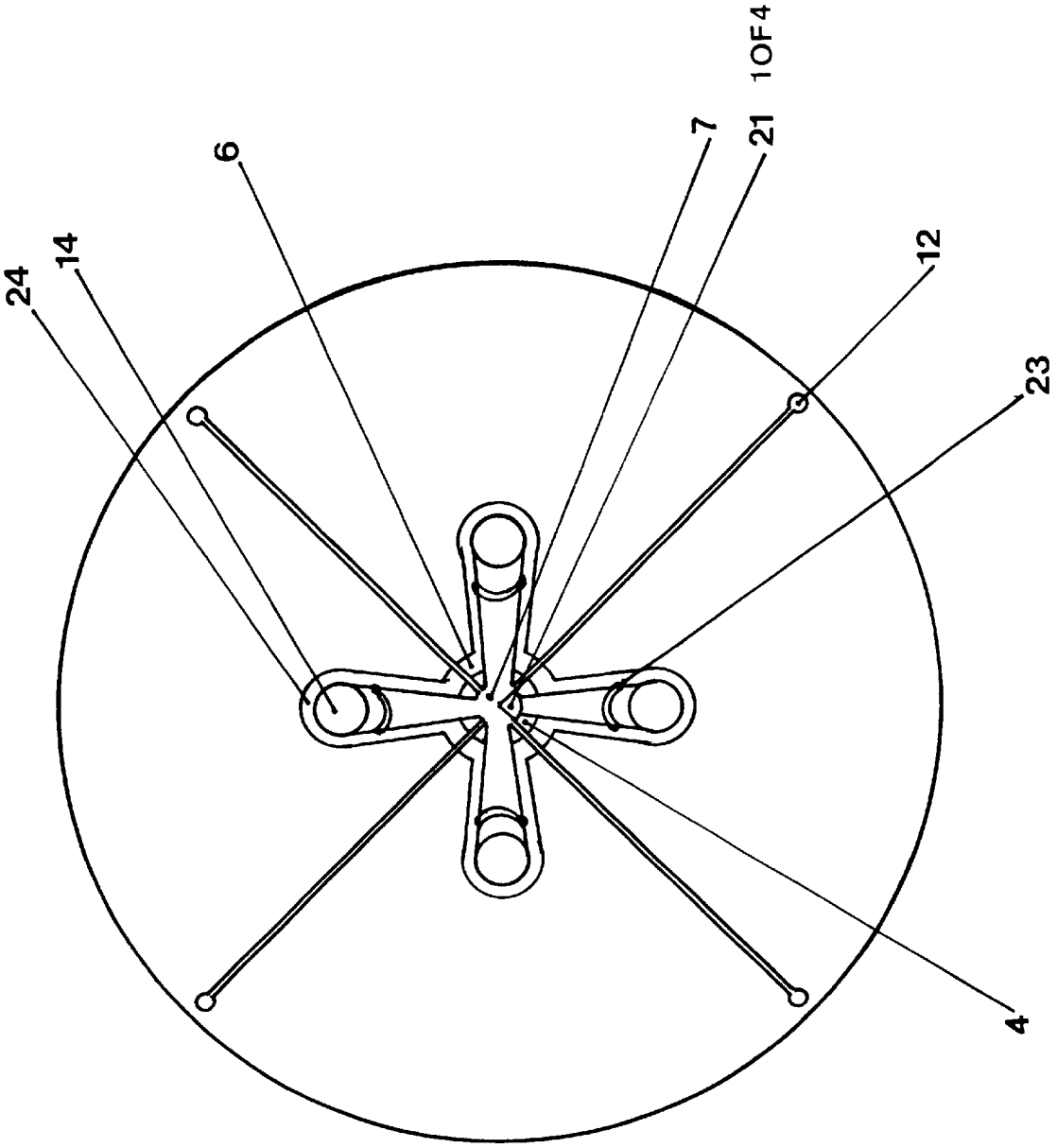

fig 4

84 || @HighEarthOrbit_ linktr.ee/Grider2

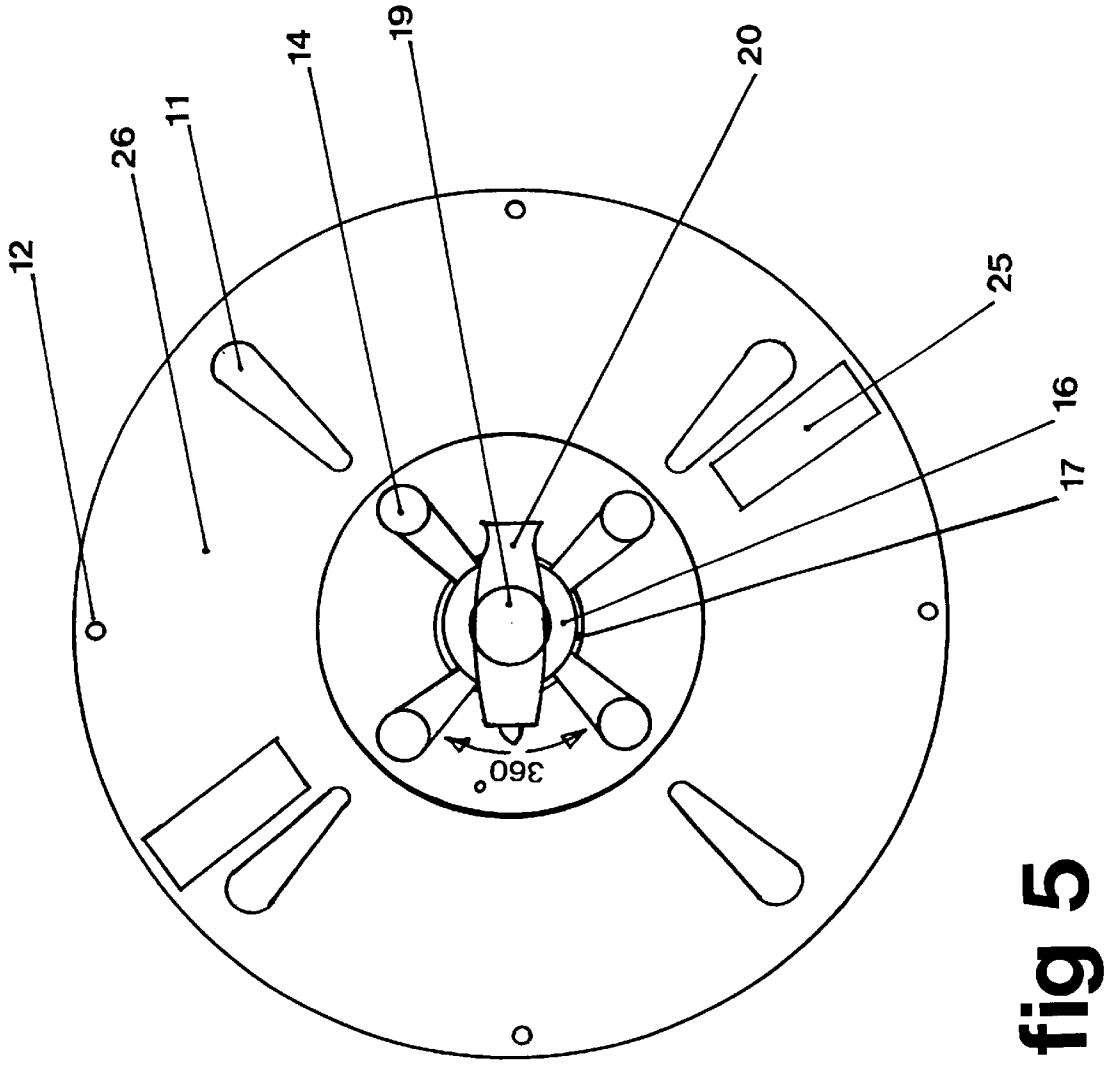

fig 5

85 || @HighEarthOrbit_ linktr.ee/Grider2

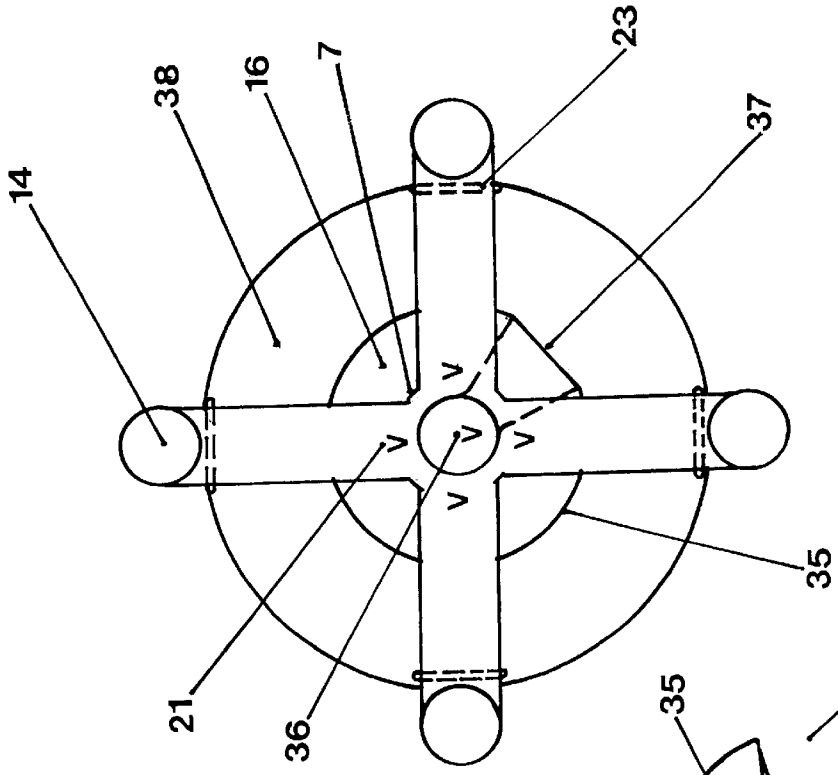

fig 8

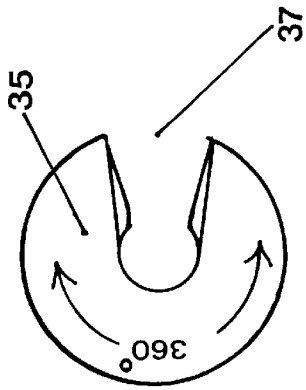

fig 7

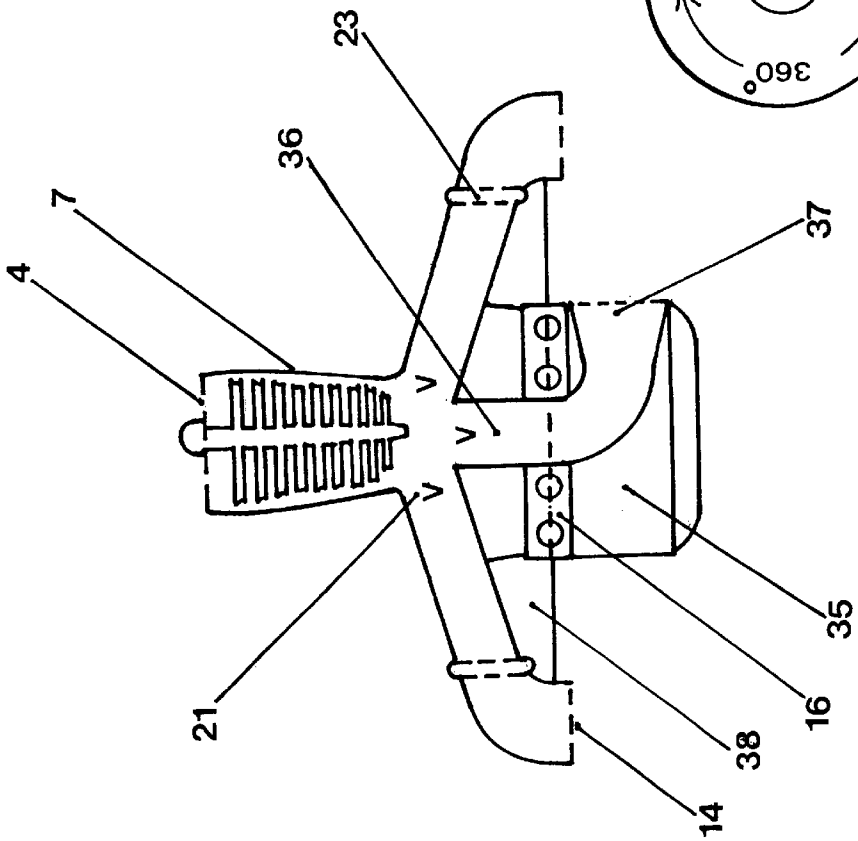

fig 6

86 || @HighEarthOrbit_ linktr.ee/Grider2

CIRCULAR VERTICAL TAKE OFF AND LANDING AIRCRAFT

The invention comprises a circular VTOL aircraft which is capable of vertical and horizontal flight by combining propulsive power from one or more central vertically mounted jet or rocket engines delivering thrust downwards to four vertical thrust vents situated at cardinal points below the engine (or engines), together with power from a jet or rocket engine (or engines) horizontally mounted on a turntable pod which is steerable through 360 degrees and is situated centrally below the vertical thrust engine (or engines).

Alternatively the horizontal engine can be replaced by a central vent (or vents) from the vertical engine which provides vectored thrust downwards to a horizontal thrust nozzle (or nozzles) attached to the turntable and steerable through 360 degrees. (via steering control in the cockpit).

The stability of the craft in the horizontal plane is achieved by variable thrust control from the four cardinal vertical thrust vents giving pitch and bank control as well as full vertical take-off and landing thrust control. Thrust from the horizontal engine provides acceleration and braking power for horizontal flight as well as directional control through 360 degrees.

With the combined use of these power configurations the aircraft can achieve rapid flight manoeuvres in all directions, including for example rapid ascent or descent using full VTOL thrust control; rapid changes in direction in the horizontal plane from forward to reverse, or from side to side, or change of direction through 90 degrees, or through 360 degrees, together with pitch and bank control, as well as spin control.

This rapid manoeuvrability in the horizontal plane combined with a high rate of ascent or descent in the vertical plane, together with inherent stability as a weapons platform is designed to make the aircraft extremely effective for military applications such as rapid personnel deployment, air-sea rescue missions, photo-reconnaissance and fighter/bomber missions. For military operations the passenger compartment area may be re-designated both for weapons payload and for additional fuel tanks in order to extend the normal operating range. Weapons/missiles can be arranged to provide 360 degrees of effective fire cover. The aircraft may be constructed using composite GRP and carbon-fibre reinforced materials, which are both strong and light in weight, and will enable the craft to exhibit a low radar profile. An air-sea rescue version of the craft would use the vectored horizontal thrust unit (without the horizontal engine) which would allow the craft to float on the sea to rescue survivors.

The Harrier VTOL fighter aircraft has a critical high-risk transition operation from vertical to horizontal flight; this critical risk is avoided in the design disclosed because vertical thrust is constant and the transition from hover to horizontal flight is immediate on application of throttle to the horizontal engine. Designed to fly with a minimum of two engines (one for vertical, one for horizontal thrust), in the event of an engine failure the second engine can be used to effect an immediate emergency landing.

The flight-deck is situated at the top centre of the craft and is supported by structural formers above the main central engine (s). As a security feature the passenger compartment is completely separate from the flight-deck and is designed within the main body of the craft, together with cargo, and fuel tanks which are positioned around the central engine (s). The circular plan shape of the craft allows for a

very large fuel capacity which will enable this design to out-range the conventional helicopter/VTOL aircraft as well as to have a higher passenger and cargo carrying capacity.

A notable feature of the design is that the passenger compartment, cargo and fuel-tank loadings are all integrated into the main body of the craft which combines the function of both wing and fuselage in one inherently strong disc-shape which generates lift in forward flight, thus avoiding existing problems such as wing flutter and spar-failure associated with high loading on conventional aircraft designs.

The aircraft can be adapted for use as a rescue vehicle to secure personnel from high-rise buildings in the event of fire, because, unlike the helicopter with its vulnerable rotor, this craft is designed to butt right up to the side of a building so that personnel trapped by fire can escape directly into the passenger compartment through hatches which slide open in the upper surface of the craft.

The aircraft can also be adapted for use as a fire-fighter, particularly against forest fires, by re-designating the passenger compartment area as a very large capacity container for liquid or foam extinguishers. (With total capacity dependent on the lifting power of the engines) The extinguishing liquids can be dumped directly onto the fire from hatches in the underside of the craft or directed onto burning buildings from pressurised nozzles around the circumference of the craft.

The VTOL performance ability would enable the aircraft to take off vertically, or at 45 degrees from the ground by using both vertical and horizontal thrust together, and then make a controlled descent at a 45 degree angle of approach to the airfield runway for landing rather than the very shallow approach path used by conventional aircraft at present: this would ensure a reduction in aircraft noise levels in residential areas close to airfields. In fog, it would be possible to position the aircraft directly overhead the airfield and complete a vertical descent onto the apron. This aircraft could also operate from much smaller airfields as it would not require the 1500 metre runway used by conventional aircraft and could also use existing helicopter landing pads on land, oil-rigs and ships.

The aircraft is designed to fly with the main disc-shaped body maintaining a level horizontal attitude through all stages of flight, thereby alleviating passenger discomfort experienced during high angle pitch and bank changes experienced in conventional aircraft. Whilst changes in direction can be made by steering the turntable of the horizontal jet, the pilot will also be able to use pitch and bank trim controls as required by varying the thrust from the four vertical thrust vents.

The aircraft conforms to the aerodynamics of the disc-shape which allows minimum air resistance or drag in horizontal flight, together with lift generated by airflow over the upper surface, and maximum air resistance in descent. Therefore, with suitable power units the craft will be capable of fast horizontal flight combined with the high drag/parachute effect of the disc diameter presented against the airflow for vertical descent and landing operations.

A specific embodiment of the invention will now be described by way of example with reference to the accompanying drawings in which:

FIG. **1** shows a typical cross-sectional elevation of the craft and illustrates the vertical and horizontal propulsion systems.

FIG. **2** shows a plan view of the top of the craft.

FIG. **3** shows a plan which illustrates the central vertical thrust engine, the cooling air by-pass chamber, the fuel tank layout, passenger compartment plan, and undercarriage bays.

87 || @HighEarthOrbit_ linktr.ee/Grider2

FIG. **4** shows a plan view of the thrust vents from the vertical engine and the four secondary puffer nozzles (trim/spin controls) at the circumference.

FIG. **5** shows a plan view of the underside of the craft and illustrates the horizontal engine attached to the turntable, the four vertical thrust vents, undercarriage bays and access ladder/hatch to the passenger compartment.

FIG. **6** shows a sectional elevation of an alternative engine vent design with four vertical thrust vents and a single central vent vectored to a horizontal thrust nozzle attached to a turntable for directional control.

FIG. **7** shows a plan view of the horizontal thrust nozzle.

FIG. **8** shows a plan view of the alternative vent design described above.

N.B. Turn-table, bearings, valves, engine fan-blades and compartments shown in the drawings are representational. Single engine positions shown may be supplanted by twin engines or any multiple of engines to provide the required power to weight ratio for adaptive design versions of the craft described herein. Similarly, jet engines may be supplanted by rocket or plasma engines suitable for future performance requirements.

In FIG. **1**, a jet engine **7** is mounted vertically in the centre of the aircraft by engine mounts **33**, which are secured to the main bulkhead frames. Air is drawn into the engine intake **4** from the annular intake **5** positioned in the top central area of the craft. Intake covers (not shown) may be fitted within upper surface **8** to slide over air intake **5**. An impeller fan **34** drives air into the by-pass chamber **6** to provide cooling air around the engine and thrust vents via annular duct **10**; the air is then expelled through open vent **24** at the base of the craft. Thrust from the vertical engine is equally distributed to the four vertical thrust vents **14**, which are situated at cardinal points below the engine. Valves **21**, positioned at the neck of each thrust vent, (where the vent joins the engine) control the amount of thrust delivered from the engine to each vent. The valves are operated by a control column in the cockpit, whereby thrust delivered to the fore-and-aft vents will control the pitch of the aircraft, and thrust delivered to the lateral vents will control bank. It follows from this configuration that the fore-and-aft vents need to be aligned with the flight-path of the aircraft and rapid changes in direction will therefore be limited to 90, 180, and 270 degrees in either direction from the given flight path so that these pitch and bank controls remain effective. However, more gradual course changes may be made by banking the craft to left or right, then maintaining the horizontal attitude when the course change is complete. Four secondary trim controls in the form of puffer jet nozzles **12**, which can be rotated to control the spin of the craft in each direction about its vertical axis, are situated at the circumference at cardinal points plus 45 degrees,(in order to offset the main thrust vents) and with jet thrust supplied from engine **7** to provide secondary pitch and bank trim control. The main vertical thrust vents **14**, may be fitted with vectored thrust nozzles **23**, to allow thrust to be directed through 180 degrees (i.e. 90 degrees each side of the vertical position): this would allow the pilot to rotate the lateral vents from vertical to horizontal thrust while using the fore-and-aft vents for vertical thrust and rudder control. The vectored thrust nozzles can also be rotated to spin the craft rapidly about its vertical axis.

Single vents shown in the representations may also be adapted to twin-vent or multiple vent systems relative to the twin or multiple engine types employed to provide the required thrust relating to the invention described herein.

The top fanshaft bearing **3** connects the top of the vertical engine to the upper structural framework **32**. It may however be preferable to have a clearance between the engine and the said upper structural frame which supports the flight-deck **2**, enclosed by hemispherical cockpit-canopy **1**, positioned at the top centre of the aircraft. (In this case bearing **3** would not be required).

The horizontal thrust engine **20** is positioned centrally below vertical engine **7** and is mounted to a rotatable turntable **16** which enables the pilot to swivel the engine (via steering control) through 360 degrees, then lock the turntable to the required course. Cardinal point marks will be required on the steering control to enable the pilot to make rapid course changes through 90 degree sequences in order to align the horizontal engine with the four pitch and bank control vents as described above. Horizontal thrust is expelled at engine vent **15**. The said engine is secured by a protective base-plate **19**, connected to the turntable above the engine. The turntable is bolted to engine mountings **22**, which are secured to the main bulkhead frames. The central engine unit may be completely disconnected from the main frame of the aircraft for maintenance.

Provision may be made for the single horizontal engine to be supplanted by twin or multiple engines connected to the central turntable in order to provide additional thrust as required by larger types of the aircraft disclosed. Provision may also be made for the said horizontal engine/s to have a vectored thrust vent fitted to give additional vertical thrust on take-off.

The main fuel tanks **31**, with filler pipes **30**, are situated in the main body of the craft and positioned around the central engine chamber. Fuel is pumped to the engines via structural frames **22** and **33**, and the tanks are shaped to ensure gravity feed to the lower outlet; tanks may be linked together to ensure an even distribution of fuel weight around the craft as fuel is consumed. Fuel and lubricant pipes **18** (fitted with flow valves as required) which supply horizontal engine is **20**, are installed to pass vertically through the centre of turntable **16** in order to allow the free movement of turntable and engine. Ancillary engine systems such as cooling plant, fuel pumps and electrical services together with turntable motor and hydraulics may be housed within the circular engine frame compartment **17**. Reserve fuel tanks, cargo or supplies may be accommodated in compartments **9**, above the undercarriage bays.

The retractable undercarriage units **11** have castoring main-wheels to allow free movement when taxiing and bay-doors **13**, (which may be supplanted by sliding doors).

Passenger compartment **29** is situated in the main body of the craft and may have windows/port-holes (not shown) with retractable access hatch/ladders **25** fitted into the lower body **26** of the craft. In the fire-rescue version personnel enter the passenger compartment directly through the upper surface **8** of the craft, via foot-plate **27**, and hatch **28**, (which may also be supplanted by sliding-doors).

In FIG. **2** a plan view of the top of the aircraft shows the annular air intake **5**, structural frames **32** which support the central flight-deck **2**. Fuel tank filler pipe or pipes **30** are installed in the upper surface **8** of the aircraft. Personnel rescue/access hatches **27** and **28**, may either hinge or slide open and will be positioned between the internal bulkhead formers (not shown)of the craft.

In FIG. **3** a plan view illustrates the central vertical thrust engine **7**, with intake **4**, impeller-fan **34**, engine mounts **33**, and cooling chamber **6**. Fuel tanks **31** are installed around the central engine/s. Undercarriage bays **11** are situated at cardinal points; however, provision may be made for the minimum practical number of three undercarriage bays positioned on plan at 120 degree intervals. The passenger

88 || @HighEarthOrbit_ linktr.ee/Grider2

compartments **29** are circular, extending from the circumference of the aircraft and may be linked by an access corridor as required. Compartment **9**, above the undercarriage bay may be used for storage.

In FIG. **4**, a plan view illustrates the four vertical thrust vents **14**, which extend outward and downward from the base of the central vertical engine **7**. Vectored thrust units **23** which swivel through 180 degrees from horizontal may be fitted to provide optional vertical thrust as well as rudder thrust control. Cooling chamber **6** surrounds the engine and has a lower exit vent **24** at the base of the craft. Four flow valves **21** control the thrust delivered from the engine to each vent. Four puffer jets **12** supplied with thrust either from the central engine or from separate compressors, are situated on the diagonal between the main thrust vents and provide additional pitch and bank trim control as well as spin control.

In FIG. **5** a plan view of the underside **26** of the craft shows horizontal thrust engine **20** with base-plate **19**, attached to turntable **16** situated centrally below engine compartment **17** in relation to the vertical thrust vents **14**. Typical positions for the personnel access ladder/hatch **25** are given close to the undercarriage bays **11**.

FIG. **6** illustrates a sectional elevation of an alternative engine vent design where 4 main vertical thrust vents **14** extend from the base of vertical engine **7** (or engines), with the addition of a central vent **36**, delivering thrust to horizontal nozzle **37**. This nozzle is incorporated within vectored thrust unit **35**, which is connected to turntable **16**. This enables thrust from nozzle **37** to be swivelled through 360 degrees in order to steer the craft. Flow valves **21** are fitted to each vent to control thrust.

A plan of vectored thrust unit **35** with nozzle **37** is shown in FIG. **7**.

FIG. **8** illustrates a plan showing the alternative engine vent design described above with the additional vent **36**, vectored thrust unit **35** and nozzle **37**. A circular vent cowling **38** may be fitted to stream the airflow beneath the vent system.

Whereas the essential features disclosed in the above invention relate to the juxtaposition of vertical and horizontal engines and related control vents fitted to a disc-shaped body which exhibits uniform aerodynamics in any given direction of flight, the invention also allows for the same engine configuration to be adapted for use with different types and shapes of flying wing, for example: a square, oblong or triangular shape which may have either sharp or rounded corners, and which may be aerodynamically efficient at supersonic speeds. The invention allows for the jet engine systems shown to be supplanted by rocket engines where the design disclosed may be adapted for use as a space shuttle vehicle (with passenger compartment re-designated to fuel-tank space). In this event, the advantage of using full vertical and horizontal engine thrust acting at 90 degrees to the vertical axis of the craft would allow both horizontal and vertical acceleration at the same time (to achieve a flight path of approximately 45 degrees from horizontal) until escape velocity is reached. On re-entry, full vertical thrust combined with the wide area of the disc-shape would give high air resistance or drag until the craft slows down to normal horizontal flight speed.

What is claimed is:

1. A circular Vertical Take-Off and Landing (VTOL) aircraft comprising:

an aerodynamic disc shaped airframe;

a central jet, rocket or plasma engine mounted to the airframe in a fixed vertical axis position and delivering thrust downward and outward to four vertical thrust vents which are fitted with vectored thrust nozzles to provide vertical and horizontal thrust for the aircraft and for hovering flight; said four vents being situated at cardinal points on plan, at 90 degrees to the vertical axis of the said engine;

at least one propulsion device mounted horizontally and secured to a turntable pod which can be steered through 360 degrees to enable the aircraft to move horizontally in any direction;

at least one bypass fan or impeller driven by said at least one central engine to provide airflow through a cooling chamber surrounding the said engine.

2. The circular VTOL aircraft of claim **1**, wherein said at least one propulsion device which provides horizontal thrust is at least one central thrust vent from the said central vertical engine, delivering thrust vertically downward to at least one horizontal nozzle within a vectored thrust unit which is connected to said turntable that can be rotated through 360 degrees in order to steer the aircraft horizontally in any direction.

3. The circular VTOL aircraft of claim **1**, wherein said at least one propulsion device is at least one of a turbojet, rocket or plasma engine.

4. The circular VTOL aircraft one of claim **1** or **2** or **3**, wherein said four vertical thrust vents are angled outward far enough to clear the turning radius of the said central horizontal engine, and are fitted with vectored thrust nozzles that swivel through 180 degrees: from forward-horizontal through vertical to rearward-horizontal positions, thus providing vertical and horizontal thrust as well as yaw control; and wherein said four thrust vents are fitted with valves to control the amount of thrust delivered to said vectored thrust nozzles in order to control the pitch and bank of the aircraft in flight.

5. The circular VTOL aircraft one of claim **1** or **2** or **3**, wherein the passenger compartment, as well as fuel tanks, payload and weapon-bays are incorporated in the main circular body of the aircraft, and wherein the flight-deck is situated above the said central vertical engine (or engines), and is separate from the passenger compartment.

6. The circular VTOL aircraft one of claim **1** or **2** or **3**, wherein hinged or sliding doors are fitted to the upper surface of the aircraft to allow direct access to personnel during rescue operations.

7. The circular VTOL aircraft one of claim **1** or **2** or **3**, wherein the passenger compartment is sized to accommodate fuel tanks; the hull structure strengthened; and said vertical and horizontal thrust engines upgraded to enable the aircraft disclosed to operate in the role of a re-usable space-shuttle vehicle.

* * * * *

89 || @HighEarthOrbit_ linktr.ee/Grider2

United States Patent [19]

Kaelin

[11] **3,933,325**

[45] **Jan. 20, 1976**

[54] **DISC-SHAPED AEROSPACECRAFT**

[76] Inventor: **Joseph Richard Kaelin,** Villa Seeburg, Buochs, Switzerland

[22] Filed: **Sept. 24, 1974**

[21] Appl. No.: **508,895**

[30] **Foreign Application Priority Data**

Sept. 25, 1973 Switzerland 13750/73

[52] **U.S. Cl.** ..... **244/23 C**

[51] **Int. Cl.**[2] **B64C 29/00**

[58] **Field of Search**..... 244/12 B, 12 C, 23 B, 23 C, 244/52, 54, 55

[56] **References Cited**

UNITED STATES PATENTS

2,677,931	5/1954	Prieto	244/52 X
2,743,885	5/1956	Peterson	244/12 C X
2,930,546	3/1960	Wibault	244/23 B
2,935,275	5/1960	Grayson	244/23 C
3,072,366	1/1963	Freeland	244/23 C
3,193,214	7/1965	Hollingsworth	244/52 X
3,335,976	8/1967	Kappus	244/23 B X
3,514,053	5/1970	McGuinness	244/12 C

FOREIGN PATENTS OR APPLICATIONS

2,030,603	12/1971	Germany	244/23 C
230,204	3/1963	Austria	244/23 C

Primary Examiner—Trygve M. Blix
Assistant Examiner—Barry L. Kelmachter
Attorney, Agent, or Firm—Werner W. Kleeman

[57] **ABSTRACT**

An aerospacecraft possessing a discus shaped body equipped with at least one disc type air screw driven by a turbine by the exhaust gases of a jet engine. The disc type air screw is equipped with variable pitch blades and works in the manner of a helicopter rotor for the generation of lift.

2 Claims, 6 Drawing Figures

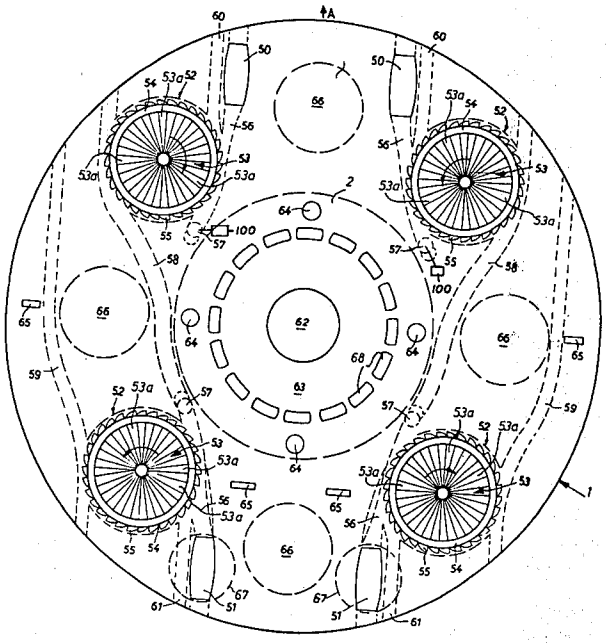

90 || @HighEarthOrbit_ linktr.ee/Grider2

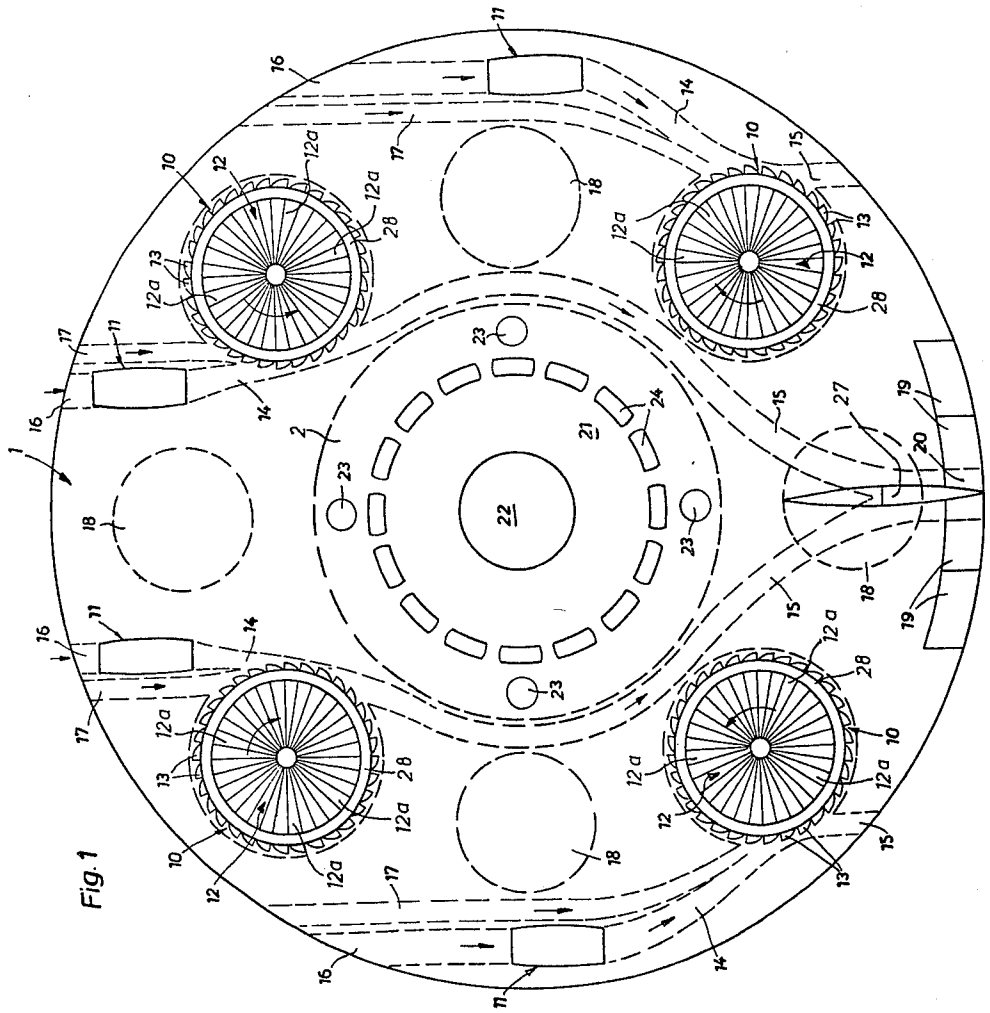

Fig. 1

91 || @HighEarthOrbit_ linktr.ee/Grider2

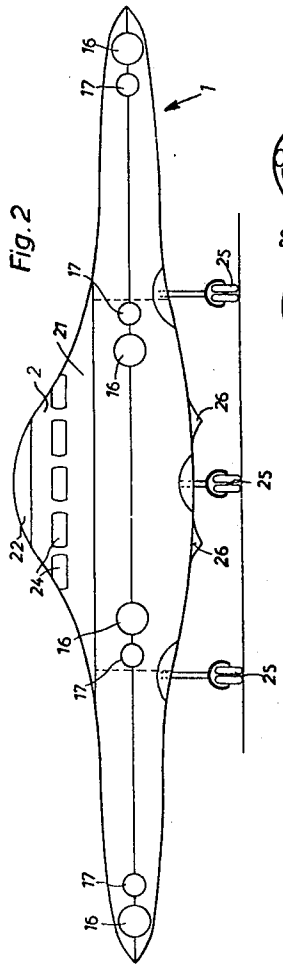

Fig. 2

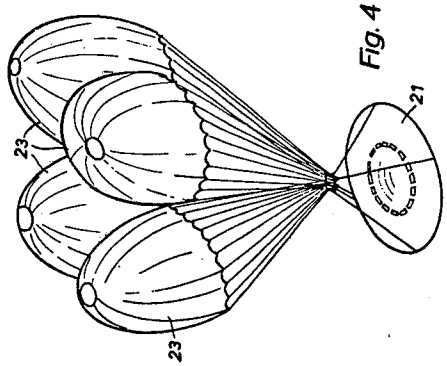

Fig. 4

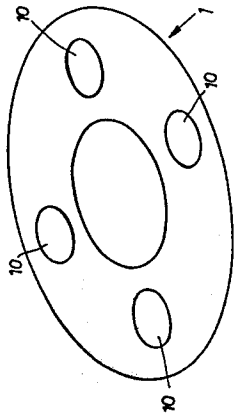

92 || @HighEarthOrbit_ linktr.ee/Grider2

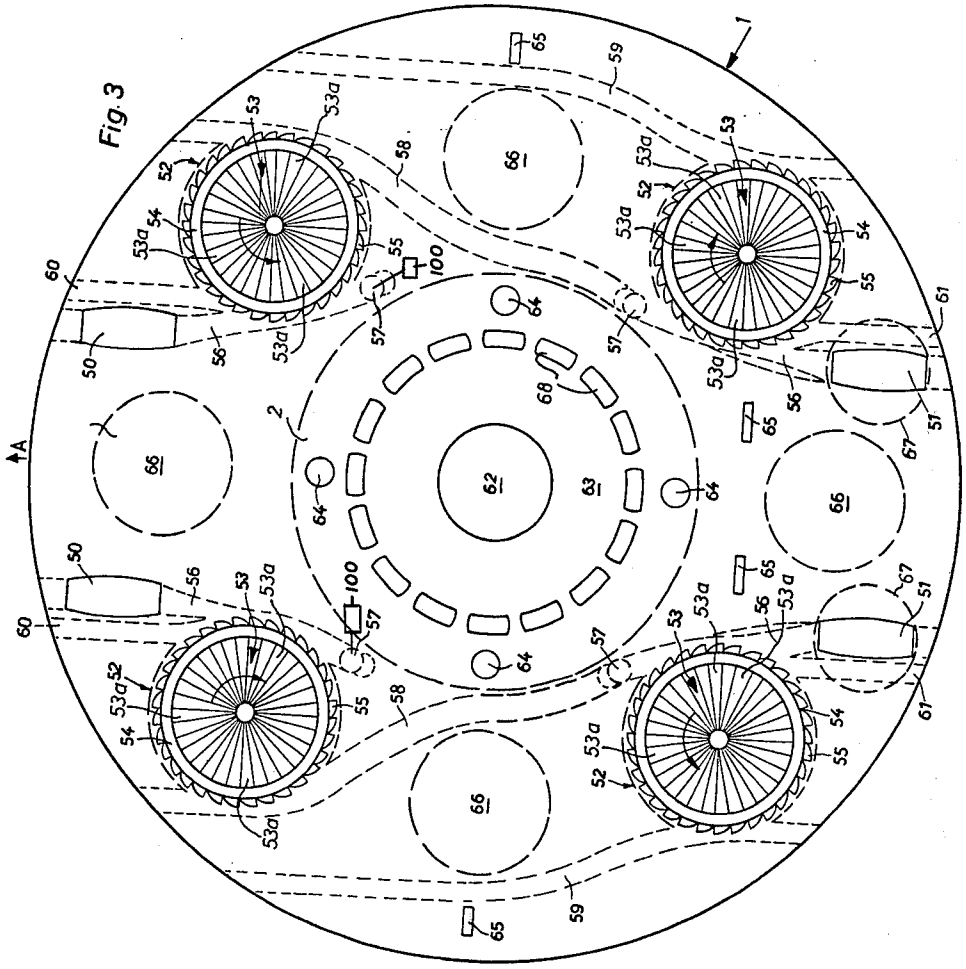

93 || @HighEarthOrbit_ linktr.ee/Grider2

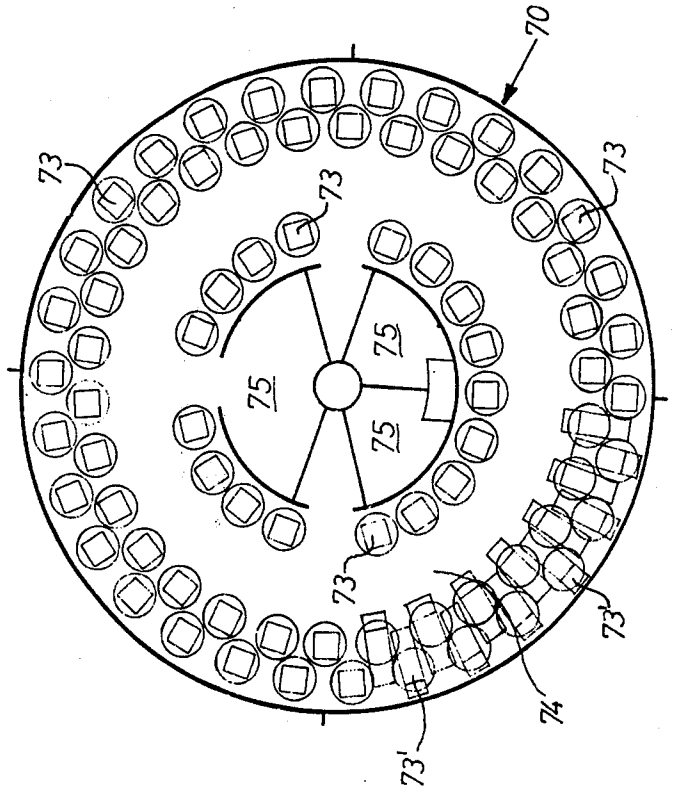

Fig. 5

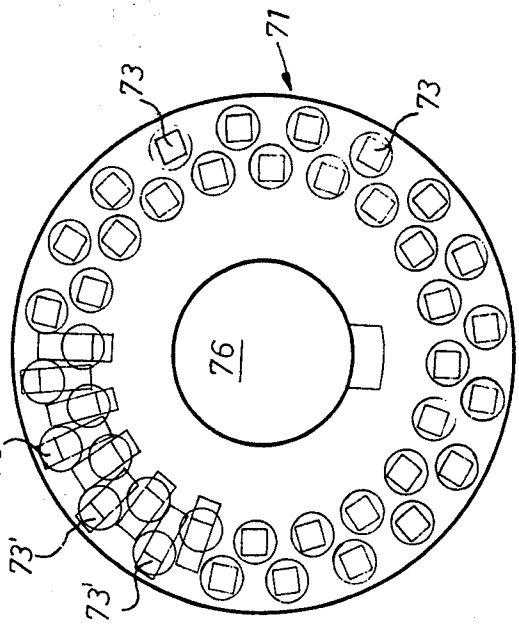

Fig. 6

94 || @HighEarthOrbit_ linktr.ee/Grider2

DISC-SHAPED AEROSPACECRAFT

The present invention concerns a new and improved construction of aerospacecraft. The aerospacecraft of this development is distinguished by its discus shaped formation. Also, that it possesses at least one disc type air screw which is driven by the off-gases or exhaust gases from a jet engine via a turbine. The disc type air screw is equipped with adjustable pitch blades and used like helicopter rotors for lift.

BRIEF DESCRIPTION OF THE DRAWINGS

The invention will be better understood and objects other than those set forth above, will become apparent when consideration is given to the following detailed description thereof. Such description makes reference to the annexed drawings wherein:

FIG. 1 is a plan view of a first example of an aerospacecraft,

FIG. 2 is a frontal view of the craft shown in FIG. 1,

FIG. 3 is a plan view of a second example of an aerospacecraft

FIG. 4 is a general illustration of the craft with opened parachute and the cabin detached from the craft,

FIG. 5 is a plan view of the lower passenger space, and

FIG. 6 is a plan view of the upper passenger room inside the cabin of the aerospacecraft.

DETAILED DESCRIPTION OF THE INVENTION

As shown in FIG. 1 and 2, the craft is constituted by a round discus or disc type of body 1, which is centrally more convex on the upper side than on the under side in order to create lift during flight. Four gyroscopes 10 are installed in this body 1 and which are equally spaced along an imaginary circle. The body 1 is further equipped with four jet engines 11, two of which are diametrically opposed to each other along a diagonal near the periphery of body 1, whereas the other two engines are placed side by side and symmetrically to a diagonal which lies at 90° to the first mentioned diagonal. Conventional types of jet engines can be used for these four jet engines 11. The four gyroscopes 10 are fitted with disc type air screws 12 with several adjustable pitch blades 12*a* and also fitted with vanes 13, which are impinged by the off-gases or exhaust gases from the jet engines 11. To guide the exhaust gases onto the vanes 13 on the disc type air screws 12, ducts 14 are provided, through which the exhaust gases from the jet engines 11 are guided straight onto the vanes 13 of the disc air screws 12. Further ducts 15 are provided, which lead the exhaust gases after contact with the vanes 13 of the disc air screws 12 to the outside of the craft. For the intake of fresh air to the jet engines 11 the ducts 16 are provided. Furthermore, ducts 17 can direct fresh air immediately onto the vanes 13 of the disc type air screw 12. The fuel for the jet engines 11 is stored in four fuel tanks or storages 18 which are also placed on an imaginary circle between the gyroscopes 10. The fuel tanks 18 are emptied simultaneously, so that the trim of the craft is maintained. Four elevators 19 are provided for the steering of the craft, a trim foil 20 and a rudder with stabiliser 27.

In the centre of the craft there is provided a ring shaped cabin 21 which is intended for the passengers as well as a pilot cabin 22. The latter is placed centrally and above the passenger cabin 21. Both of these cabins

21 and 22 can be detached from the outer part of the aerospacecraft and are fitted with four parachutes 23 which are capable of carrying the detached cabins 21 and 22, as can be seen from FIG. 4. The passenger cabin 21 is provided with a number of windows 24.

An undercarriage 25 is installed for the landing of the craft. Steps (not shown) aid entry and exit from the cabins 21 and 22. There are further provided special hydraulically adjustable stabilisers 26 for landing on water and also for the stabilising of the craft during flight.

The four jet engines 11 can be rotated (not shown) so that the jet force of the engines 11 can work in two directions which are at 90° to each other. This makes it possible to use them for lift as well as for forward movement of the craft.

The four disc type air screws 12 are constructed in such a way that the individual air screw blades 12*a* can be adjusted by means of a planetary drive in conventional manner, for example by means of EDV controlled number of revolutions.

At the end of the blades 12*a* of the disc type air screw 12 there is provided a fly mass 28 which rotates with the disc type propeller. It serves to lend the necessary stability to the craft during flight as well as during take-off and landing.

The effectiveness of the described aerospacecraft is as follows:

Reacting onto the body 1 of the craft are firstly the thrust forces of the four jet engines 11, which by means of their rotatability can react in two directions at right angles to each other. Secondly, the more complex shape of the upper part of the body in contrast to the lower side creates a lifting force for the craft. Thirdly, the four gyroscopes 10 create a force which stabilises the craft in space, and fourthly the disc type air screws 12 lend further lift to the craft.

The combination of the four forces make it possible to take off with the craft in three different ways. Firstly, the four jet engines 11 can be positioned horizontally prior to take-off, so that the craft can take off similar to a conventional aircraft on a virtually horizontal plane. During this take-off the blades of the circular air screw 12*a* are positioned in such a way, that they give virtually no lift. Secondly, the craft can take off at an angle of 45°, in which for instance two jet engines 11 are positioned vertically, whereas the other two remain in a horizontal position. Together with this the two disc air screws 12 react with their blades 12*a* as lifting rotors. Take-off at an angle below 45° can also take place if all four jet engines 11 are positioned horizontally and if the pitch for the air screw blades 12*a* is adjusted accordingly. Thirdly, the craft can take off vertically, in which case all four jet engines are directed in such a way that they react vertically.

For vertical take-off, the exhaust gases of the jet engines 11 do not drive the blades 12*a* of the rotary air screw, so that these are operated purely by the air flowing through ducts 17. This drive, however, is sufficient to create the stabilising force of the rotors 12. Touch-down on land respectively air takes place in a similar manner.

As the arrows indicate in FIG. 1, two of the four gyroscopes 10 are revolving in a clock-wise direction, whereas the other gyroscopes 10 are revolving anti-clockwise. This effect is obtained firstly by the positioning of exhaust gas ducts 14 and otherwise by the shape of the turbo blades 13 on the disc type screw 12. For a

95 || @HighEarthOrbit_ linktr.ee/Grider2

stable position of the craft it is necessary that two of the four gyroscopes **10** work in opposite directions to the remaining two.

FIG. **3** shows a plan view of a second example of an aerospacecraft. Its outer shape is the same as that shown in FIG. **2**.

In this second embodiment, each two jet engines **50** and **51** are symmetrically positioned on a diagonal across the craft and near the periphery of the body **1**. Four gyroscopes **52** are provided which are equidistantly spaced along an imaginary circle, similar to the first embodiment. These gyroscopes **52** can either be combined, as in the first embodiment with disc-type air screw **53** with adjustable pitch blades, or they can be installed separately as a fly wheel gyroscope **54** next to the disc type air screws **53**. The disc type air screw **53** is fitted on the periphery with turbine vanes **55**, onto which the exhaust gases from jet engines **50** and **51** are ducted. Should the gyroscope **52** be installed as a separate entity next to the air screws **53**, then they are driven by suitable gears (not shown on the drawing) from the air screws **53**. FIG. **3** shows the manner in which the ring shaped fly wheel mass **54** is attached to the blade ends of air screw blades **53***a*. This fly wheel mass **54** offers the craft the necessary space stability, similar to the example of FIG. **1**.

Behind the jet engines **50** and **51** there are installed the exhaust gas ducts **56** which direct the exhaust gases from jet engines **50** and **51** directly onto the turbo vanes **55**. The exhaust gas ducts **56** merge with the exhaust pipes **57** behind the turbo vanes **55**, which are inclined from the centre plane of the disc by 45°, so that the emerging gas stream is directed against the ground at approx. 45° and results in lift during take-off of the aircraft. The two rear jet engines **51** are each mounted on a turntable **67** and can be rotated through 180°, so that the thrust of all four jet engines **50** and **51** can work in parallel directions. Should the two rear jet engines **51** be positioned in such a way that their thrust reacts in the same direction as the thrust from the forward jet engines **50**, then three-way valves, schematically indicated by reference character **100** in FIG. **3**, close the exhaust pipes **57**, belonging to jet engines **51**, and instead the exhaust gas ducts **56** of the jet engines **51** are connected with the ducts **58**, so that fresh air can flow through ducts **58** and the channels **56** to the jet engines **51**. Pipes **59**, **60** and **61** are provided for the cooling and the drive of the turbo vanes **55**. By means of the pipes **59**, additional cooling air flows into the aerospacecraft when moving, the quantity being dependent upon the speed of the craft, whereas fresh air is sucked and led to the turbo vanes **55** through the pipes **60** by means of the flow of exhaust gases of the forward engines. Fresh air is sucked and led to the turbo vanes **55** on the rear jet engine **51** by means of pipe **61**.

In the centre of the body, and analogous to the first embodiment a cabin **63** for passengers and a second cabin **62** for the pilot are provided. The passenger cabin is fitted with a number of windows **68**. Fitted to these cabins are four parachutes **64**, which in case of danger can be separated from the outer part of the disc body and are capable of carrying the detached cabin. This can be seen in FIG. **4**.

Steering of the aircraft is controlled by four withdrawable steering vanes. The fuel for the jet engines **50** and **51** is stored in four symmetrically arranged tanks **66** which are equally emptied during operation.

The effective working of the described aerospacecraft, similar to that described in example **1**, is as follows:

For take-off the thrust of the two rear jet engines **51** is adjusted in an opposite direction to that of the forward jet engines **50**. This drives the four disc type air screws **53** in the directions indicated by the arrows. The pitch of the air screw blades in the disc type air screw **53** is adjusted for take-off in such a way that the highest possible lift is created. By means of the four exhaust pipes **57**, the exhaust gases of the jet engines **50** and **51** are directed against the ground, so that the thrust of the engines **50** and **51** is used for the lifting of the craft during vertical take-off.

As soon as the craft has obtained a certain height, the two rear jet engines **51** are revolved through 180° so that the thrust of all four jet engines **50** and **51** reacts in the same direction. Lift is then only being exerted by the two forward jet engines **50** by means of the exhaust pipes **57** and the resulting exhaust jet and the disc type air screws **53**, which are driven by the exhaust gases from jet engines **50**. During this time the rear jet engines **51** produce pure forward thrust, as their exhaust gases do not emerge via the exhaust pipes **57** nor the disc type rotors **53**.

Touch-down on land or water of the craft takes place in a similar manner.

Alteration of the pitch of the air screw blades **12***a* respectively **53***a* alters the lift created by the rotary screws **12** or **53**. The amount of this lift can therefore be adjusted by regulation of the number of revolutions of the air screw disc **12** and **53**.

During any break-down, which could become dangerous for passengers and crew, as for instance fire, failure of control or engines, the cabins **21**, **22** and **62** and **63** can be detached from the outer ring shaped part of the craft. This separation can be carried out by mechanical, hydraulic or electrical installations. The separated centre **2** of the craft with its cabins is lowered by means of the parachutes **24** respectively **64** in a manner which is not dangerous for either the passengers or crew. Near the ground, the cabins are braked by means of braking rockets, so that the touch-down on either land or water is as soft as possible.

FIG. **5** and **6** show a plan view of the lower respectively upper passenger area **70** respectively **71**. In both passenger cabins **70** and **71** revolving seats **73** are arranged around the periphery of the circular room in two rows. In this arrangement one row is offset with respect to the other, so that the seats **73** in both rows can be transformed into couches.

In the lower passenger room **70** a further row of seats **73** is installed, which is separated by a passage **74**. In the centre of the room **70** are rooms **75** which can be used for various purposes.

In the case of the upper passenger area **71**, which is smaller than the lower passenger area **70**, a pilot cabin **76** is provided in the centre, which can be adjusted vertically by means of a lift.

The described aerospacecraft can take off vertically from ground as well as from water and the same applies for touch-down.

Gyroscopes **10** respectively **52** maintain the craft in its various flight attitudes.

The discus shaped body exhibits a form which is aerodynamically of advantage, as the air resistance can be kept low even at high speeds. While there is shown and described present preferred embodiments of the

96 || @HighEarthOrbit_ linktr.ee/Grider2

invention, it is to be distinctly understood that the invention is not limited thereto but may be otherwise variously embodied and practiced within the scope of the following claims.

Accordingly, I claim:

1. An aerospacecraft comprising a substantially discus-shaped body, a number of disc-type air screws provided for said body, a number of turbines and a number of jet engines provided for said body, one respective turbine and jet engine being operatively associated with a respective disc-type air screw, each of said disc-type air screws being driven by the associated turbine by means of exhaust gases emanating from the associated jet engine, each of said disc-type air screws being equipped with variable pitch blades and functioning in the manner of a helicopter rotor for the generation of lift, each turbine having vanes driven by the exhaust gases generated by the associated jet engine, and said number of jet engines being symmetrically arranged along diagonals extending across the craft, two of said number of jet engines defining rear engines, means for rotating said two rear jet engines through 180° in a plane extending through the center of the body, and each jet engine driving the associated disc-type air screw.

2. An aerospacecraft comprising a substantially discus-shaped body, a number of disc-type air screws provided for said body, a number of turbines and a number of jet engines provided for said body, one respective turbine and jet engine being operatively associated with a respective disc-type air screw, each of said disc-type air screws being driven by the associated turbine by means of exhaust gases emanating from the associated jet engine, each of said disc-type air screws being equipped with variable pitch blades and functioning in the manner of a helicopter rotor for the generation of lift, each turbine having vanes driven by the exhaust gases generated by the associated jet engine, duct means for said disc-shaped body for directing the exhaust gases of each jet engine against the vanes of the associated disc-type air screw, said duct means merging with exhaust pipe means inclined through an angle of about 45° with respect to the central plane of the body to permit downward deflection of the exhaust gases from each jet engine, said number of jet engines comprising four jet engines substantially symmetrically arranged along diagonals extending across the craft, two of said jet engines defining rear engines, means for rotating said two rear jet engines through approximately 180° in a plane extending through the center of the body, each jet engine driving an associated disc-type air screw, and means for interrupting the connection of the duct means of the jet engines with the exhaust pipe means in order to be reconnected with air ducts when both rear jet engines are positioned such that the thrust of all four jet engines is in the same direction.

* * * * *

97 || @HighEarthOrbit_ linktr.ee/Grider2

(12) INTERNATIONAL APPLICATION PUBLISHED UNDER THE PATENT COOPERATION TREATY (PCT)

(19) World Intellectual Property Organization
International Bureau

(43) International Publication Date
24 February 2005 (24.02.2005)

PCT

(10) International Publication Number
WO 2005/016746 A1

(51) International Patent Classification[7]: B64C 39/00, B64G 1/40

(21) International Application Number: PCT/YU2003/000025

(22) International Filing Date: 19 August 2003 (19.08.2003)

(25) Filing Language: English

(26) Publication Language: English

(71) Applicant and
(72) Inventor: MATIC, Zoran [YU/YU]; Save Erakovica 56, YU-37000 Krusevac (YU).

(81) Designated States *(national)*: AE, AG, AL, AM, AT, AU, AZ, BA, BB, BG, BR, BY, BZ, CA, CH, CN, CO, CR, CU, CZ, DE, DK, DM, DZ, EC, EE, ES, FI, GB, GD, GE, GH, GM, HR, HU, ID, IL, IN, IS, JP, KE, KG, KP, KR, KZ, LC, LK, LR, LS, LT, LU, LV, MA, MD, MG, MK, MN, MW, MX, MZ, NI, NO, NZ, OM, PG, PH, PL, PT, RO, RU, SC, SD, SE, SG, SK, SL, SY, TJ, TM, TN, TR, TT, TZ, UA, UG, US, UZ, VC, VN, YU, ZA, ZM, ZW.

(84) Designated States *(regional)*: ARIPO patent (GH, GM, KE, LS, MW, MZ, SD, SL, SZ, TZ, UG, ZM, ZW), Eurasian patent (AM, AZ, BY, KG, KZ, MD, RU, TJ, TM), European patent (AT, BE, BG, CH, CY, CZ, DE, DK, EE, ES, FI, FR, GB, GR, HU, IE, IT, LU, MC, NL, PT, RO, SE, SI, SK, TR), OAPI patent (BF, BJ, CF, CG, CI, CM, GA, GN, GQ, GW, ML, MR, NE, SN, TD, TG).

Declaration under Rule 4.17:
— *of inventorship (Rule 4.17(iv)) for US only*

Published:
— *with international search report*

For two-letter codes and other abbreviations, refer to the "Guidance Notes on Codes and Abbreviations" appearing at the beginning of each regular issue of the PCT Gazette.

(54) Title: DISC FLYING OBJECT

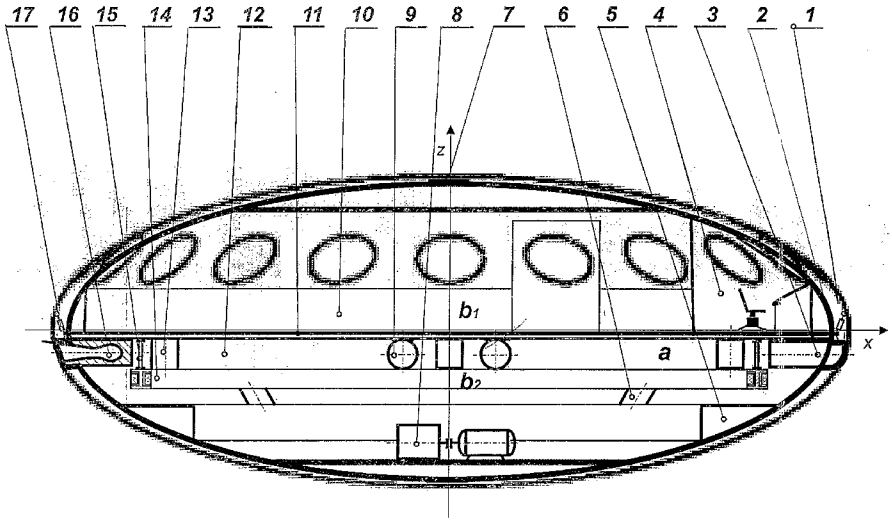

(57) Abstract: The disc flying object is a new form of aircraft for flying through atmosphere or space. The armour (1) and the body (2) have a form of the disc, i.e. the form of ellipse observed from directions of x and y-axis and the form of circle observed from direction of z-axis. The body (2) is divided by the floor (11) to the upper part (10) and the lower part (12). The upper part is intended for command area (4), for passengers or scientific devices. In the lower part there is a special stabilizer (14), group of engines (13) for vertical flight and hovering, engine group (16) for flying forwards, engine group (3) for flying backwards, engine group (9 and 29) for lateral moving of the object, then undercarriage (6), fuel tank (5), auxiliary equipment (8) and useful load. The stabilizer (14) and the engine groups (turbojet, rocket or plasma reactive) provide the disc flying object with remarkable stability in space and maneuver abilities, because it can fly in all directions at high velocity transporting heavy load to great distances.

WO 2005/016746 A1

98 || @HighEarthOrbit_ linktr.ee/Grider2

DISC FLYING OBJECT

TECHNICAL FIELD IN REGARD TO THE INVENTION

The invention belongs to the atmospheric and space aircrafts engineering field, i.e. the new, natural forms of aircrafts in the form of a disc with great stabilization in state of moving or steadiness in space, vertically ascending or lowering on Earth or some other heavenly body; with great maneuver abilities and radical changes in flying directions depending on space it moves through, with turbojet or rocket (classical or plasma reactive) engine drives or their combination, with small movement resistance, wide range of flying speed (under sound or over sound to 5 M, I and II cosmic speed and up to 0,6 c for plasma reactive engine),with ability to transport heavy loads and fuels.

According to international patent classification (IPC), it is marked as: **B 64 C 39/00 ;** B 64 C 29/00, B 64 G 1/00.

TECHNICAL PROBLEM

In what way to solve the problem of an aircraft having a natural disc form for flying through atmosphere or space, with small flying resistance coefficient during flying through atmosphere, with great surfaces and ascent coefficient, with ability for vertical ascent and descent and hovering in space, also having great maneuver ability in the course of moving and hovering with wide range of flying velocity depending on application of the aircraft; with a possibility to promptly change directions and courses of moving, to be able to function using the existing turbojet and rocket engines, and subsequently plasma reactive engines for accomplishing maximum speed in atmosphere and speeds required for closed or opened trajectories around the planet, with easy modifications of velocity and flying directions, for transport of heavy loads and fuel for departure and return to specific spots in space?

This invention with its natural form, great stability and aircraft drive in which, apart from new advantages, the ones of plane, rockets and partly of helicopters are united, solves all above mentioned and other problems concerning atmospheric or cosmic space as the disc flying object.

BACKGROUND ART

Man's striving to be able to fly is probably as old as mankind itself, the myth about Icarus and Dedalus points to it. Works of great minds – Leonardo da Vinchi drawings and patents of Nikola Tesla show us how great that striving is. The first actual flying has been achieved with balloons in 18th century and flying airships in 19th century. At the end of 19th and the beginning of 20th century first flying by plane were accomplished and in the fifties rockets were developed flying men into space. However, very dynamic development of aircrafts-airplanes, gliders, helicopters, hovercrafts and rockets with or lacking men crew has actually been achieved in 20th century, especially in its second half.

99 || @HighEarthOrbit_ linktr.ee/Grider2

Airplanes are highly developed nowadays, starting from the small, sport airplanes, agricultural and those used for fire extinguishing, to the huge passenger and cargo planes. Plane speed depending upon the type and application, is from few hundred km per hour to 3,5 M (Mach). The drive is achieved with airscrews set to motion by piston or turbojet engines or by turbojet engines only. Their characteristic is that the ascent and stabilization is accomplished with wings containing the drive fuel, and in the fuselage is the useful load. The control and stabilization elements (ailerons, cover wings, flaps, vertical stabilization, trimmers) are thus exposed to outer influence, which can cause difficulties in the course of flying, especially in high altitudes. The supple wings ($\lambda > 6$) are subject to oscillations and easy fractures. With drive engine ceasing to work it abruptly dives. Long runways – from few hundred meters to ten kilometers are necessary for taking – off and landing. Plane maneuver abilities are limited and vertical taking – off or landing are impossible (with the exception of several VTOL types). Relatively small wing surfaces limit the useful load size that is why the load size takes only one fifth of the total aircraft weight.

Rockets are also highly developed nowadays, so that they are used for delivering artificial satellites around Earth, or to send cosmic devices to interplanetary space and some even to interstellar space with powerful multiple digress rockets. Rockets are characterized by the fact that they are used only once – after the power of rocket ceases to work it is discarded. Subsequently, the controls and service modules continue their independent flight and only the control module returns to Earth. Because of the impossibility to adjust the velocity and trajectory, the destination in space must be " aimed at ", i.e. the launching must be performed exactly in a specific moment otherwise the rocket would miss its destination.

Space aircraft-shuttle or Buran is not capable to take-off by itself. It is ejected into orbit using once-usable, powerful buster rockets. Returning, the shuttle does not have the possibility of adjusting the velocity and the movement corrections are limited and that is why it dives towards Earth. That causes great thermic strains of covering which is also the case with control module returning to Earth, when all telecommunication contacts are interrupted.

The first flying object similar to the disc is an aircraft on air cushion, better known as hovercraft. It is the aircraft that vertically rises from surface (of approximately 0,5 m) and then horizontally flies using small speed over flat surfaces (ground or water) or it hovers. First suggestion for such an aircraft was given by a great mind, Nikola Tesla. With it he has probably predicted, as well as for a great number of other achievements, that the final form of flying objects would be in the shape of a disc or ellipsoid. However, abilities of hovercraft are modest because of the drive and insufficient stabilization.

From above briefly noted state of flying engineering it can be deduced that each aircraft type has relatively small possibilities, i.e. great limitations. None of them has united positive characteristics of the other, i.e. of the numbered main types. As far as I know, some testing with the similar forms has been conducted in Germany before World War II and in America in the second half of 20th century, but all of them proved to be unsuccessful.

100 || @HighEarthOrbit_ linktr.ee/Grider2

DISCLOSURE OF INVENTION ESSENCE

The disc flying object has the form of a disc –it is a circle in horizontal projection and ellipse in vertical projection. The circle radius is the big semi-axis of the ellipse. The ratio circle diameter and disc height (the ratio ellipse semi-axis **a : b**) is ranging from 2 : 1 to 10 : 0 and it depends on application of the flying object. As a rule, this ratio is bigger for greater aircraft velocities, because the movement resistance coefficient is smaller. Apart from this basic form, the flying object can be composed of two discs in moving direction, or of three discs forming equilateral triangle with rounded angles.

The disc flying object is actually composed of armour and body, whereas the body is a smaller disc inside the armour and subdivided in two parts by horizontal plane- upper part for the aircraft staff, space for measuring, regulating and controls equipment, passengers, scientific equipment and so on; and the lower part is for stabilization, drive engines, fuel, useful load, undercarriage and other auxiliary equipment.

The flying disc armour, together with top fuel reservoirs, can swivel in relation to the horizontal axis and also around the vertical axis of the object for a smaller angle using specific number of hydraulic cylinders (at least four pairs of them). The swiveled armour in relation to the body keeping moving direction provides the ascent of the object or it's turning in a great angle, keeping passengers and the load in horizontal position.

The undercarriage, as a rule, consists of four stands (three at least) that are telescopically bound hydraulic cylinders withdrawing inside the body after the take –off.

The drive of the flying object includes four engine groups of different application: for vertical ascend, landing and hovering in space, for flying forwards in projected speed, for sudden brake and flying backwards and for sudden lateral moving and rotation around the vertical axis. The type of engine drives depends on application of the aircraft- turbojet, rocket (classical or plasma reactive), or the combination of the two. It is necessary to point out that this shape, or the ellipsoid, is ideal for plasma reactive engines that are to be expected in recent future.

The group of engines for vertical take-off, landing and hovering of the flying object is placed on the disc flange, or on the flange of the object composed of two or three discs. The number of engines in this group depends on the weight of the object and the speed required for vertical movement. Generally, there are six of them and the half should have the buoyancy enough to maintain the object in flying position.

The group of engines for flying forwards provides the necessary velocity of the object, overcoming the resistance of atmosphere flying through it, or the appropriate velocity in cosmic space. For example, moving through the atmosphere requires at least three turbojet engines of the speed up to 2,5 M and for accomplishing the speed up to 5 M two or more rocket engines are added.

101 || @HighEarthOrbit_ linktr.ee/Grider2

The group of engines for sudden brake and moving backwards are set on the disc flange on the side of the course of moving. They are used for prompt decrease of the velocity and stopping of the object, and subsequently for flying backwards. Generally there are two engines.

The group of engines at the flanges of the flying object, under right angle in relation to the flying course, is used for abrupt lateral moving and prompt turning. There are two engines on each of the flanges. When both of the engines on one side are working, the object abruptly moves to the opposite side. When one engine is turned on at each side, opposite regarding the center, they form a couple for revolving the object around its vertical axis and thus quick turning of the object flying or in the state of hovering.

During the flight, all combinations of engine performance from particular engine groups are possible, providing remarkably great maneuver abilities of this flying object.

The stabilization is one of the most important elements for moving the disc flying object through space at all. Considering that, observed from above (or under) it is a circle, and in front (or from the side) is an ellipse, it does not have any other elements of stabilization. That is why the stabilization of the disc flying object is performed with specially constructed gyroscope. Beneath the floor bound to it is gyroscope stator, in which two rings rotate in opposite directions around the vertical axis of the disc. If you observe this whole it is a ring of rectangular cut, the stator is I profile in the cut in which vertical is the drive of the rings, and the inner and outer rings rotate between the horizontal tracks. Mechanical drive (gears or friction), fluid under pressure or inverse magnetic field can be used as the rings drive. Mechanical drive is for very small and school aircrafts, compressed air is for moving through that space, and possible use of pressured liquid is also used for space aircrafts. Inverse magnetic field accomplished with alternating polyphase currents has universal application and then the rings have the role of short-circuited electric motor's rotors.

The rotation speed of the rings, the inner as well as outer one, i.e. the kinetic moment of gyroscope itself depends on outer forces trying to take the rotation axis from the direction of vertical axis of the disc, i.e. to swivel it. The change of angular rotation speed of the rings is deduced by changing the number of revolutions of drive gear or friction wheel at mechanical drive, by changing the quantity and pressure of the fluid at such drive or by changing frequency of the polyphase electricity's at inverse magnetic field. Balancing of the object in space, causing it not to revolve around its own axis is achieved by opposite- direction ring_rotation. They should have the same value of their own kinetic moment that satisfies the condition of top stabilization.

The rings between the upper and lower stator arms can rest mechanically (on balls or cones), using fluid cushions or strong magnetic field. The choice depends on size and application of the disc flying object.

For successful start, flying and landing of the disc flying object other equipment is required which can be named auxiliary equipment. For the start of the object a source of electrical energy is

102 || @HighEarthOrbit_ linktr.ee/Grider2

necessary and it depends on the application of the aircraft. For smaller ones flying through the atmosphere accumulator battery is sufficient for turning the turbojet engines subsequently producing the required amount of electricity. Great aircrafts require a special set of machines for electricity production and at the same time they are the spares.

For the drawing of the undercarriage in and out, for swiveling of the armour in a small angle in relation to body of the object, for opening and closing of the air hatches of the turbojet engines etc., an appropriate hydraulic set of machines with the installation is required.

For maintaining the pressure in the aircraft, opening and closing of the doors (in the state of resting), cooling of the engine, etc. a compressor with pneumatic installation is required.

Also, for the safe flight of the disc flying object, a specific number of measuring, regulatory, control and telecommunication devices is required, such as altitude meter, speed indicator, the object position indication in relation to all three axis, engine performance parameters, stabilizator work parameters, auxiliary equipment, pressure indicator, also the audio and visual contact devices, radars, etc., depending on the application of the aircraft.

The disc flying object volume is very great and comparing disc diameter and the length or wingspan of airplanes; it surpasses volumes of other modern aircrafts in multiple ways. The basic division of the disc space concerning the horizontal axis surface is on the upper and lower space. In the upper space, above the floor, is a space for the staff of the flying object, controls, and passengers if applied for the transportation of the mentioned, or for laboratory and scientific equipment and for similar applications. The section of the top ellipse obtained by the cut of the surface parallel to the floor which is also the ceiling for the passengers, has a space that can be used for fuel storing (the upper fuel tank), occupying approximately the third up to the half of the total fuel quantity. Larger quantity of the fuel is stored in the lower tank placed just under the stabilizer which is ring-shaped. The space between the floor and the stabilizer is reserved for the drive group of engines. The area inside the stabilizer rings and the lower fuel tank and beneath it is reserved for auxiliary equipment and useful load.

The space division is similar with the flying objects composed from two or three discs. However, according to the needs, this division of disc space can be different, that will be determined by the constructor depending on the application of the disk flying object.

BRIEF DESCRIPTION OF DRAWINGS

Picture 1 – shows **A–A** cut of the disc flying object from picture 2.

Picture 2 – shows view **A** on the disc flying object from picture 1.

Picture 3 – shows view **C** on flying object composed of the two discs from picture 4.

Picture 4 – shows view **D** on flying object composed of the two discs from picture 5.

Picture 5 –shows view **B** on flying object composed of the two discs from picture 4.

Picture 6 - shows view **F** on flying object composed of the three discs from picture 7.

103 || @HighEarthOrbit_ linktr.ee/Grider2

Picture 7 – shows view **E** on flying object composed of the three discs from picture 6.

Picture 8 – diagrammatically shows effect of forces on the disc flying object from picture 1 when the armour is swiveled for α angle in relation to the body in the direction of flying.

Picture 9 – shows cut of the ring stabilizer 13 from picture 1.

Picture 10 – shows the position of the group of engines for vertical flying and hovering of the disc flying object on view **G** from picture 11.

Picture 11 – diagrammatically shows the arrangement of the group of engines with moving directions and courses of the disc flying object on view **H** from picture 10.

DETAILED DISCLOSURE OF THE INVENTION

Two geometric forms dominant in macro world – the circle and ellipse, i.e. bodies: ball and ellipsoid. Based on it, the form of the disc flying object is deduced, as a natural form.

The disc flying object is basically composed of the armour 1 and the body 2. The floor 11 divides the disc body in two parts, the upper 10 for the crew, passengers or minor loads, controls area 4 for commands and regulatory devices, scientific devices etc., and the lower part 12 for drive engine groups 3, 9, 13, 16, 28, 29, stabilizer 15, fuel tanks 5, undercarriage 6, auxiliary equipment 8 and useful load. Under the floor 11, and on the disc flange bound to the floor are engine groups 13 for vertical ascend, engine group 16 for flying forwards, engine group 3 for prompt stopping and flying backwards and engine groups 9 and 29 for rapid lateral moving and rotating around z-axis during flying or hovering of the object. The armour and the body of the disc flying object are linked with hydraulic cylinders 17, as well as with slide contacts 7, providing the swiveling of the object in relation to the body for a small angle up to maximum 10°, around x and y axis, i.e. in the floor plane.

Observing the object from the front or from the side, from directions of x and y – axis, a form of the ellipse is perceived as shown in the A-A cut. Observing the above mentioned from above, from directions of z-axis, view A; the circle of radius R is viewed. The big semi-axis of the ellipse **a is** equal to the radius R. The minor semi-axis of the ellipse, $\mathbf{b_1}$ and $\mathbf{b_2}$, are 2 to 10 times smaller than the big semi axis, depending on the object size. The bigger semi-axis **a**, i.e. the radius R, the ratio of semi-axis is greater. With the ratio increase the movement resistance coefficient is smaller, meaning it is maximum for the ratio 2 and maximum for the ratio 10.The maximum movement resistance coefficient would be if semi-axis were equal, i.e. when the ball form would be obtained. The values of movement resistance coefficient are to be measured experimentally in aerodynamic tunnels for all axis ratios.

The form of a disc has small resistance coefficients especially because the inductance is very small. The splitting of airflows during flying of the disc is similar as with the wings, but the paths of the flows on the flanges of the profiles differ. The longest paths are of the flows over the middle of the disc, decreasing to the left and to the right, so that over the flanges of the disc for **a = R** they are minimum.

104 || @HighEarthOrbit_ linktr.ee/Grider2

In the case of the equal minor semi-axis of the upper and lower part of the ellipse, $\mathbf{b_1}$ and $\mathbf{b_2}$, and in case there is no swiveling around y-axis in relation to x-axis, the air flow velocities of the upper and lower side of the profile (the upper and the lower) would be equal and there would be no ascent force ($F_z = 0$). When the ellipse form consisting of two semi-ellipses is procured, the upper one being with semi-axis $\mathbf{b_1}$ and the lower with semi-axis $\mathbf{b_2}$, $\mathbf{b_1}$ being larger than $\mathbf{b_2}$, then the air flow velocity over the upper would be greater than the velocity of the lower. It means that the pressure on the upper will be smaller than on the lower, and the basic ascent force F_z occurs under the framework swiveling angle of 0°. This value of the ascend force will be sufficient for maintaining the flight direction but only over the specific velocity of the given profile. The value of the ascent coefficient $\mathbf{c_z}$ should be measured experimentally.

The movement resistance forces F_x and of the ascent F_z are relevant for moving of the disc flying object in atmospheric area (of Earth or some other heavenly body). Flying through cosmic area, this profile offers other advantages and the most important is that the hits of micrometeorites pose minimum danger in harming the covering and the advantage of the profile for excellent maneuver abilities for avoiding crashes with greater meteorites as well as remarkable surveying.

The form of the flying object can be accomplished conjoining two discs, or, to be more specific, conjoining two semi-discs linked longitudinally with elliptic cylinder in moving direction 16. This form of the flying object is suitable for minor flying velocities and heavier loads. The combination of three discs is also possible, i.e. of the parts, the thirds of the discs linked with elliptic semi-cylinders, and in the center with flat surfaces on the top and lower side 17. This form of the flying object is appropriate for even smaller flying velocities and even heavier loads.

The profile of the disc flying object involves large inner volume and large ascent surface with relatively small outer surface. In that way the great useful space and ascent with relatively small flying resistance is provided.

Walls of the disc flying object, the armour 1 and the body 2, consists of thin and solid profiles made from light metal alloys, the inner as well as the outer covering. The inner covering is made of light metal sheets or of technical polymers. The outer covering is made of light metal sheets (for smaller flying velocities), and for great flying velocities from titanium or polycarbonates. The outer covering can be lined with material slightly reflecting electromagnetic waves (invisible for radars, and the profile itself has slight reflection), or with soft material for absorption energy of meteorite hits during flying through cosmos, for example with expanding polyurethane adapted for low temperatures and covered with carbonate fibers. Between the inner and outer covering thermo-insulating material can be installed (for smaller flying velocities) or the air could flow for cooling (for greater flying velocities during flying through atmosphere), as well as for heating (for flying into space).

The windows are set at the profile 1 armour flanges and in one or two rows in the same direction on the body 2, and as usual, above the disc floor. Some windows could be set at the lower side

105 || @HighEarthOrbit_ linktr.ee/Grider2

of the profile for surveying from the luggage area. The shape, size, number of rows and number of windows in line, as well as other specifics will be determined by the object constructor.

Position, number and size of the doors on the disc flying object are also to be determined by the object constructor depending on the application. Generally, above the floor are the doors for entrance of the passengers or for specifically light loading. For heavy loads doors could be set from the lower side together with assembling stairs or narrow platform. In the flying object for flying through space between exit door and the inner area, there is a decompression chamber on exit of cosmonauts into outer space (and vice versa on their return).

For increasing the ascent force F_z of the disc flying object in the course of moving through atmosphere and at specific velocity, and also for increasing (for + F_z) or decreasing (for - F_z) of flying altitude, the armature 1 should be swilled around y –axis for a specific angle α in relation to movement direction as it is diagrammatically shown in picture 8. The ascent force is calculated in the usual form from fluids mechanics:

$$F_z = c_z * \rho * A * (v^2 / 2) \quad [N]$$

Where:

$c_z = f(\alpha)$ - is the ascent coefficient as the function of the swivelling angle

ρ [kg / m^3] - is the density of the fluid through which the object is moving

$A = R^2 * \pi$ [m] - is the disc surface stressed with ascent force

v [m / s] - is the object's velocity.

It is noticeable that it is necessary to increase the swivelling angle α and thus the ascent coefficient c_z during flying through fluid of smaller density, i.e. on greater altitudes in the atmospheric space as well as at decrease of flying velocity. The ascent coefficient c_z should experimentally be measured for each profile of the disc flying space, depending on the ratio of semi-axis of the ellipse – **a** to b_1 and b_2. The maximum value of the swivelling angle α should also be determined when it comes to the revolving around y-axis. That leads to the change of the direction and course in vertical plane, i.e. it comes to the moving in vertical bend of small radius that is required for the objects of special application and not for usual passenger or cargo planes.

During the swiveling of the armour of the object (axis x`) in relation to the course of flying (axis x) in picture 8, center of gravity of weight G of the object does not move, and with it apparently moves backwards for a small unit, which is positive for the disc stability. With increasing the swiveling angle α, center of pressure, i.e. the point of application of the force F, which is the vector addition of the movement resistance force F_x and the ascent force F_z; moves backwards from the course of moving, i.e. it moves towards the origin of coordinates of the x O z system. The value of such moving must experimentally be deduced for each profile of the disc. Generally, the swiveling angle α of the

106 || @HighEarthOrbit_ linktr.ee/Grider2

armour 1 in relation to the course of flying should not exceed 10° for small ratio of the semi-axis **a : b**, and it should not exceed 5° for great ratio **a : b**.

Swivelling the armour 1 of the disc flying object around x-axis in the flying course for a smaller angle β in relation to the y-axis, the buoyancy centre of the point of application of the force F moves to the side of lifting and it changes the angle effect whose component in direction of y-axis reacts to the disc in a way that it turns in great curve to the opposite direction. The turning coefficient c should also be experimentally deduced as the function of swivelling angle β to y–axis and the flying velocity of the disc.

Meaning, the flying altitude is changing by changing the swivelling angle α to x-axis and the course of flying (turning in great curve at the same altitude) is changed by changing of the swivelling angle β in relation to y-axis. Combining the changes of the angles, basic manoeuvre abilities of the disc flying object (up-left, left-right) are achieved. Naturally, these forces do not exist in cosmic space, so that the manoeuvring must be performed using the appropriate group of rocket engines in order to reach the wanted point of destination.

The swivelling of the armour 1 in relation to the body 2 of the disc (towards x and y-axis) is achieved using hydraulic cylinders 17, flexibly connecting the armature and the body of the disc. The number and the powers of the cylinders are determined by the size of the object and by the forces of movement resistance and ascent, and there are at least four pairs of the cylinders. Also, the centers of coordinate systems of the airframe (x`, y`, z `) and the body of the disc coincide in every position. At addendum spots of the disc, i.e. in the centre of the circle viewed from the direction of z-axis, the armour and the body are connected with slide connections 7 in the shape of slide valve for example, through balls or elastic joints. With it the transfer of force F to the object as a whole is thus achieved.

For abutment of the disc flying object on solid surface in the static state of it is necessary that it has a specific number of support (trestles) 6 that must be withdrawn into the disc during flying. The minimum number of supports is three, but generally it is four. The number could be bigger at very large objects.

The supports 6 (trestles) include telescopically bound hydraulic cylinders drawn out under pressure, and drawn in with under pressure of hydraulic liquid. The length and number of singular cylinders in the telescope depends on the altitude at which the horizontal axis of the disc should be, or on the altitude between the lowest point of the disc and supporting surface. The diameter of the cylinders depends on the working pressure of hydraulic system and on the weight of the object. After the taking-off, in a phase of the disc acceleration, smaller cylinders are withdrawn into bigger ones and at the end they swivel and enter into the inside of the object. On the first, the biggest cylinder is the hatch closing the opening of the outer covering when the cylinder is drawn inside the object: it is shaped as the covering of that part. For swivelling of the support from inside of the object to the support position and back auxiliary hydraulic cylinders are used.

107 || @HighEarthOrbit_ linktr.ee/Grider2

Supports 6, trestles can have jointly bound foots or wheels. If wheels are used, one or one pair of supports should be able to revolve about its axis so that the moving direction could be changed when the object moves on flat and solid surface. If a platform is used for taking-off and landing, which can be static or mobile (automotive or drawn), then jointly bound foots can be applied. The mentioned can also be used during landing on some other heavenly body or on a cosmic station.

In case of landing on completely rough surface the pressure in certain cylinders can be redistributed using appropriate sensors and regulators, so that the cylinders have different drawing heights keeping the disc in horizontal position.

For flying of the disc flying object in space, both atmospheric and cosmic, one of the most important conditions is the disc's stabilization. In the course of flying different forces continually react on the disc, which would, if there were no stabilization process, practically tumble the disc throughout the space. Such flight would be impossible.

Observing the disc from directions of x and y-axis, the profile is an ellipse and from the direction of z-axis it is a circle. That is why the object stabilization during flying must be performed using a special interior stabilizer.

Stabilizer 14 is placed beneath the floor and it is bound with tight connections 15 to it. The height of these connections depends on the engine diameter (turbojet or rocket) bound to the floor at the lower side..

The stabilizer is a ring whose cross section is a square or rectangle, as shown on cut in picture 8. The diameter of the ring-stabilizer is generally 0,6 – 0,8 of the disc radius. The cross section size depends on the size of the object and the extent of forces that act on it as well as on the type of drive and the abutment of the rotating rings.

The stabilizer 14 actually consists of the stator tightly bound with the connections 15 to the floor from the lower side, and two rotating rings. The stator has the form I of the profile including the vertical 20, the upper arm 21 and the lower arm 22. Between the arms there are rotating rings, the outer 23 and the inner 24.

The rotations of the outer 23 and the inner ring 24 are of opposite-direction and the rotations can be accomplished in several ways - mechanically, using fluid and with inverse magnetic field. The mechanical drive including cogwheels and friction wheels can only be used in the smallest and the trenage objects. Using fluids under pressure, the fluid is supplied through the appropriate nozzles 25 bound to the vertical part of the stator 20 and it activates the rotating rings having blades that present the working circuits of a turbine. The angle velocity of ring rotation depends on the pressure and the supplied fluid in a time unit. Using air for the rotation of the rings is possible only for objects flying in air space of Earth.

For rotation of the stabilizer rings it is the most suitable to use inverse magnetic field for all sorts of objects and flying conditions. For obtaining the inverse magnetic field the polyphase, alternating

108 || @HighEarthOrbit_ linktr.ee/Grider2

current is run through the threads. The inverse magnetic field the currents create makes the rings that are then short – circuited rotors of electric motor, rotate.

The rotating rings are leaning on the stator arms, and thus on the floor and on the whole object with supports 26 that can be mechanical (balls or cones) through fluid cushions created with appropriate nozzles on stator arms, or through very powerful magnetic fields obtained by appropriate electromagnets. Using of air cuss ions is possible only for flying in air space. The mechanical support can only be used with small objects but its existence is necessary for all other ways of supports when the rings are static.

The rotating rings, outer 23 and inner 24 have a common rotation axis and revolve one towards the other in opposite directions. With the rings rotation the gyroscopic effect is accomplished so that the stabilizer is, in this case, a mega gyroscope. With rings-rotation having a specific moment of inertia, using the corresponding velocity angle, the gyroscope realizes a self kinetic moment that balances the moments of some external forces and with the rotation of the outer ring in opposite direction, the moments of other external forces are balanced. Thus the precession and notation are reduced to zero or the insignificant value.

The gyroscope must fulfill the following condition for one rotating ring:

$$(I_o * \omega)^2 \geq 4 * I_c * G * e$$

Where: I_o [kgm^2] is the ring inertia moment

ω [1 / s] is the angle velocity of the ring rotation

I_c [kgm^2] is the inertia moment of the center of gravity of the object

e [m] is the distance between the center of gravity of the ring and the center of gravity of the object

G [N] is the weight of the object

The opposite direction rotation besides balancing of moments of external forces, also provides the absence of the rotation of the object around the vertical axis in opposite direction of only one ring rotation. Also, the rotation velocity is adjusted depending on flying conditions. For example, during flying of the object through atmosphere and on closed trajectories around a planet (satellite) the self kinetic moment of the gyroscope must not be too big because the gyroscope axis and thus the object axis would keep the direction towards a constant spot in space. In that case, there is no coincidence of the object axis and direction of gravity force of the heavenly body around which the disc is flying, which is a condition for " horizontal " flight (the lower side of the object is constantly turned towards the heavenly body). However, in interplanetary flight, this is not a problem but a necessity. The ring rotation velocity also needs to be decreased during detour of the object to the left or right side in horizontal plane, so that the object " leans " and compensates the effect of centrifugal force in the curve. It is not necessary while side engines for lateral moving of the object are working. Also, the decrease of angle velocity of ring –rotation is necessary in the

109 || @HighEarthOrbit_ linktr.ee/Grider2

course of changing of flying angle in vertical plane, for example, for oblique flight on taking-off or landing to get to the horizontal flight.

The disc flying object is drived with four engine groups for different flying conditions: for vertical flying and hovering 13, for flying forwards 16, for braking and flying backwards 3 and for lateral flying 9 and 29.

Each engine group includes the appropriate turbojet or rocket engines or their combination. The type of engines used depends upon application of the disc flying object. For flying in air space with velocities of 2 – 2,5 M (Mach) turbojet engines are used. For greater velocities up to 5 M and greater flying altitudes, rocket engines are added to these engines. For flying on closed trajectories around Earth (satellite), the combination of turbojet (for vertical and lateral flying) and rocket engines for flying forwards and braking are used. For flying on open trajectories in space, turbojet (or plasma reactive) engines are exclusively used.

The turbojet engines can be classical, turbofan or with additional combustion. The rocket engines, when classical, generally use liquid fuel, or they can be plasma reactive engines. The plasma reactive engines do not exist nowadays but they will exist in recent future. They will be applied for all kinds of flights, especially for interplanetary or interstellar but that will be the subject of a specific patent.

All engines are placed just below the floor and are bound to it, as shown at cut in picture 1 (the review is given regarding rocket engines). The air supply for combustion in turbojet engines is obtained through channels set at the flanges of the disc from inside to the opposite side from engine position. In classical rocket engines oxygen for combustion is stored in tanks and place for luggage and the tanks can be refilled. Different problems occur with use of plasma reactive engines, which will also be the subject of the other, singular patent.

The position of engine group 13 for vertical flight is at the flanges of the disc circle. The distance between the engines at the flanges is equal. The number and the power of these engines depends on the size and application of the object, but concerning the number, there should be at least six engines. During the performance, buoyancy force of half of the engines should be such to keep the object in a hovering position. These engines are used for vertical ascend, landing and hovering of the object in space. They are also used for rapid increase in flying altitude when required and in case the increase of the armour swiveling angle cannot provide it. For flight in the gravity field of a heavenly body, all of the engines from the group have the buoyancy direction opposite from the gravity force direction. In open trajectories of the flight, this group of engines must have both effects, so that the course of flying could be changed to " vertical ".

The engine group 16 for the drive of the disc flying object is set at the flanges of the disc opposite the moving direction and has that kind of buoyancy. The number and the power of the group depend on the size, application and the speed of the object. Generally, there are three, one central and two engines at side. In this manner, it is possible to use, if necessary, only one, only two or all three engines. Also, there

110 || @HighEarthOrbit_ linktr.ee/Grider2

can be more than three engines. For flying through air space and for 2 – 2,5 M (Mach) velocities, turbojet engines used; and for velocities up to 5 M and greater flying altitudes, rocket engines 28 are added. Also, for turning of the object in greater bend in horizontal plane, a performance of one engine at a side, besides the central one, can be used.

The engine group 3 for abrupt braking and flying forwards is set at the flanges of the front part of the disc. Generally, this group includes two engines symmetrically set in relation to the flying axis (x-axis), but the number can be bigger, for example, there could be three engines as the case is with the group for moving forwards of the objects of specific application. This group of engines is used for abrupt braking, stopping and moving backwards. In order to stop the object flying in a gravity field, the engines for vertical flying need to be activated so that it would not come to the rapid dive. Also, the engines of this and previous group when used separately and if set symmetrically provide turning of the object around vertical, z-axis. The type of engines in this group is the same as in the previous.

The engine group 9 and 29 for lateral moving of the object are set at the flanges of disc vertical to the moving direction, to x-axis, i.e. in the y-axis direction, the 9 on the left side and the 29 on the right side. Generally there are two engines on each side of the disc. The power, i.e. the buoyancy of the engines is the smallest from the same of other engine groups. These engines are used for abrupt moving of the object from one side to the other away from x-axis, i.e. in the direction of y-axis, when disc is in moving or hovering position. They can also be used for abrupt detour in the course of flying, for example, to the left if the right 29 engines are on, or to the right if the left 9 engines works. The type of engines in this group is the same as in the previous ones.

For flying through atmosphere at great velocities and to great distances, a greater quantity of fuel is required for transporting a greater number of passengers and of heavier load. That is why a larger portion of the disc flying object is consumed by the fuel tanks. It is suggested that there should be two tanks: one up, above the passenger area and one beneath the stabilizer. The upper is set in the cut of the ellipse above the area, the ceiling and it is for the crew and the passengers 10. The lower is in the shape of the ring of diverse cross sections 5 and it is bound below the stabilizer 15. The ring shape is suggested because of decrease of inertia forces effects and because of the compactness of the central space for the auxiliary equipment and cargo, as well as for easier manipulation with it.

Beneath the floor 11, at the front part of the disc in the course of flying is the cabin 4 for flying staff (cockpit at airplanes). The remaining space above the floor is for passengers and their hand-baggage. However, for special flying objects, instead of the passenger's area, in this area, for example, scientific equipment, etc. can be installed. The central part of the area by vertical at flying objects with plasma reactive engines drives will be occupied with the devices of the plasma reactive generator that will also be the subject of a specific patent.

Beneath the floor 11, the space 12 inside the gyroscope rings 15 and the lower fuel tank 5 and below them is intended for storing of the auxiliary equipment 8 and for useful load.

111 || @HighEarthOrbit_ linktr.ee/Grider2

These are only the suggestions for usual division of the space inside the flying object. However, depending on the size and application of the object, the space can be divided differently.

Hydraulic set of machines and proper installation is necessary for drawing in and out of the undercarriage 6, for swiveling of the disc armour for a specific angle in relation to the flying course using hydraulic cylinders 17, for opening and closing of the air hatches at the entrances of the turbojet engines, for opening and closing of the doors on the object and other commands.

The compressor and the proper installation is necessary for keeping the pressure in the aircraft during flying at great altitudes in air space, for cooling of the engine, for cooling of the outer covering with circulation between it and the inner covering at great flying velocities; it can also be applied for opening and closing of the doors in the state of inaction and for other commands.

For starting the engine and with it of the disc flying object, electric energy is required. For smaller objects accumulator battery is sufficient for starting the engine, and then the engines provide the adequate quantity of electric energy for performance of other consumers, for example, the gyroscope, the hydraulic set of machines, the compressor, the lighting, the controls, etc. With most of the aircrafts, accumulators are used for starting the set of machines for electric energy production, and when the engines take over the production, the accumulator remains as the reserve. At cosmic flying, when rocket engines are used, the sources of electric energy can be different, for example: solar cells, combustible cells, nuclear batteries or reactors, and also in the recent future, plasma generators.

Number and type of measuring instruments, regulatory and controls equipment depends primarily on the application of the aircraft and the equipment installed in it. Some of it are common, such as; altitude meter, speed indicator, indicator of the object position regarding all three axis, the stabilizer parameters, the parameters of the running motor for moving, the parameters of the auxiliary devices, the pressure at hydraulic and pneumatic installation, the pressure in the object, etc. Each of the objects must have devices for audio and visual contact with the base and other participants in the transportation, cameras, etc. Naturally, the flight of the object such as this is inconceivable without proper computers.

The control of the disc flying object, as the new type of aircrafts in atmosphere and space is not complicated because it includes the most of the components which operating is well known.

For taking-off, it is necessary to activate the stabilizer 15 before activating the engine group 13 for vertical flight. When the altitude of few hundred meters is reached, the disc detours in the flying direction and course using lateral engine groups 9 and 29. Then, using the hydraulic cylinders 17, the armour is swiveled towards the body 2 in the greatest angle α foreseen for the aircraft and the engine group 16 for flying forwards is activated. The aircraft increases the altitude and the velocity at oblique flight. With the increase of flying velocity the angle α between the armour 1 and the body 2 decreases as well as the buoyancy of the engine group 13 for vertical flying. Reaching the altitude and the speed foreseen for that aircraft, it transits to horizontal flight, without engine group 13 for vertical flying. The altitude change during flying is obtained by changing the angle α between the armour 1 and the body 2,

112 || @HighEarthOrbit_ linktr.ee/Grider2

or by occasional slight activating of proper engines from the group 13 for vertical flight. In the course of the flight it is possible to change course by swiveling the armour 1 around the transverse axis from the flying course, i.e. around x-axis for an angle β regarding the y-axis; or lateral engine groups 9 and 29 are used. It is able, using these groups of engines, to move laterally and thus avoid eventual clashes. For the landing the process is reversed.

If used for flying through space, the disc flying object uses so far rocket engines instead of the turbojet, and it is constructively adjusted for the conditions. It rises vertically only few hundred meters and then it constantly mounts to the orbit altitude for 45° to 75°. When it finals the predicted mission lasting from several days to several years, the disc flying object returns to Earth using the reversed procedure. After the overhauling, the aircraft is ready for flying into space again. The great volume of the aircraft enables taking into cosmos a great number of people, scientific equipment and food, drink and oxygen provisions, as well as the fuel for departure and return.

The similar procedure is for the open flight, i.e. interplanetary, till 2nd cosmic speed is achieved and until the object emerges from the earth orbit. After that the aircraft moves at inertia, occasionally specific rocket engines are activated for the correction of the trajectory. When the mission on some planet is completed, the object, using the same procedure as in taking-off from the Earth, flies off from the planet and continues the return. Multiple usages are possible concerning these aircrafts, i.e. after the overhaul it can be used for new missions.

INDUSTRIAL OR OTHER APPLICATION METHODS OF THE INVENTION

It is clear from the description that the application of this invention, the disc flying object in air and cosmic transition has broad application possibilities.

The disc flying object is constructed for each concrete application. Concerning the size, it can be small, medium and great; it can be civil, military, passenger aircraft or for cargo; for flying through atmosphere, space or the combination of the two and other applications. It is primarily intended for drives with the plasma reactive engines, but until their production begins, the existing engines can be used for air and space aircrafts. Also, for projecting and constructing these objects, a special knowledge is not required, but the one used for projecting air and space aircrafts, i.e. the knowledge in mechanical engineering, electrotechnic, aerial and cosmonautics.

It is to be expected because of the advantages that the disc flying object together with the similar ones of this area becomes the basic mean of transportation in space in 21st century.

For production of this invention, the existing equipment is sufficient, the one used for production of air and cosmic aircrafts.

Disregarding the great complexity of the disc flying object, the projection and construction of it does not require a special knowledge but the one used for projecting air and space aircrafts, i.e. the knowledge in technical, mechanical engineering and electrotechnic, as well as in air and cosmonautics.

113 || @HighEarthOrbit_ linktr.ee/Grider2

For closer view on the possibilities of the disc flying object, a basic calculation parameters are given for one of the object:

- disc diameter	12m	-number of crew members	10
-minor ellipse semi-axis	3m	-number of passengers	110
-circle surface	$113m^2$	- useful load	140kN
-ellipse surface	$56,5m^2$	- number of engines for vert. flight	12
-object volume	$452m^3$	- number of mpt -for horiz. flight	3
-empty object weight	420kN	- engine buoyancy	90kN
-fuel weight	340kN	- flying altitude up to	15.000m
-max.velocity	1,8M	- flying range of about	10.000km

114 || @HighEarthOrbit_ linktr.ee/Grider2

PATENT CLAIMS

1. **The disc flying object**, as a new form of aircraft for flying through atmospheric or cosmic space, **is characterized with** the following: it consists of the armour (1) and the body (2) having a disc form which observed from directions of x and y-axis has the form of an ellipse of greater semi-axis **a** and the minor semi-axis $\mathbf{b_1}$ and $\mathbf{b_2}$; and observed from direction of z-axis it has the form of a circle of the radius R, greater semi-axis **a** being equal to the radius R, so that they are mutually bound by hydraulic cylinders (17) and by the slide contacts (7), the body (2) being divided in the xOy plane by the floor (11) to the upper part (10) including command area, regulatory and measuring devices (4), and to the lower part (12) including the stabilizer (14) bound to the floor(11) with tight connections (15), fuel tank (5), auxiliary equipment (8) , undercarriage (6), drive engines bound to the floor (11) from the lower side, that can be turbojet, rocket or plasma reactive, forming the group of engines for vertical flying or hovering in gravity field (13), engine group for flying forwards (16), engine group for abrupt stopping and flying backwards (3), engine group for abrupt lateral moving in the course of flying or hovering (9 and 29).

2. **The disc flying object** according to the patent claim 1. and **the variant I** consisting of the armour and the body (18) bound together by hydraulic cylinders (17) and the sliding connection (7), so that the body (18) is divided by the floor (11) to the upper part (10) including command area (4) and to the lower part (12) in which there is the stabilizer (14) bound with tight connections (15) to the floor (11), fuel tank (5), auxiliary equipment (8), undercarriage (6), drive engine group for vertical flying and hovering (13), engine group for flying forwards (16) , engine group for abrupt stopping and flying backwards (3), engine group for abrupt lateral moving in the course of flying or hovering (9 and 29); **is characterized with** the armour and the body (18) constructed from two semi-discs joint with an elliptic cylinder in direction of x-axis.

3. **The disc flying** object according to the patent claim 1. and **the variant II** consisting of the armour and body (19) bound together by hydraulic cylinders (17) and slide connection (7), so that the body (19) is divided by the floor (11) to the upper part (10) in which there is the command area (4) and to the lower part (12) in which there is the stabilizer (14) bound with tight connections (15) to the floor (11), fuel tank (5), auxiliary equipment (8), undercarriage (6), drive engine group for vertical flight and hovering (13), engine group for flying forwards (16) , engine group for abrupt stopping and flying backwards (3), engine group for abrupt lateral moving in the course of flying or hovering (9 and 29); **is characterized with** the armour and the body(19) consisting of the three discs linked

115 || @HighEarthOrbit_ linktr.ee/Grider2

together with halves of an elliptic cylinders so that together they compose an equilateral triangle with rounded angles.

4. **The disc-flying object** according to the patent claim 1., **is characterized with** the stabilizer (15) in form of circular annulus of the quadrangular cross section and it includes the stator of the form of profile I, having the vertical (20) and horizontal arms, the upper (21) and the lower (22) between which rotate the outer (23) and the inner ring (24) in opposite directions in the gaps (27) as the following elements (25), while drive elements (mechanical, fluid or electromagnetic) (25) are set on the vertical (20) and the rotating rings are kept in hovering position by the cushions (26) (mechanical, fluid or electromagnetic) .

116 || @HighEarthOrbit_ linktr.ee/Grider2

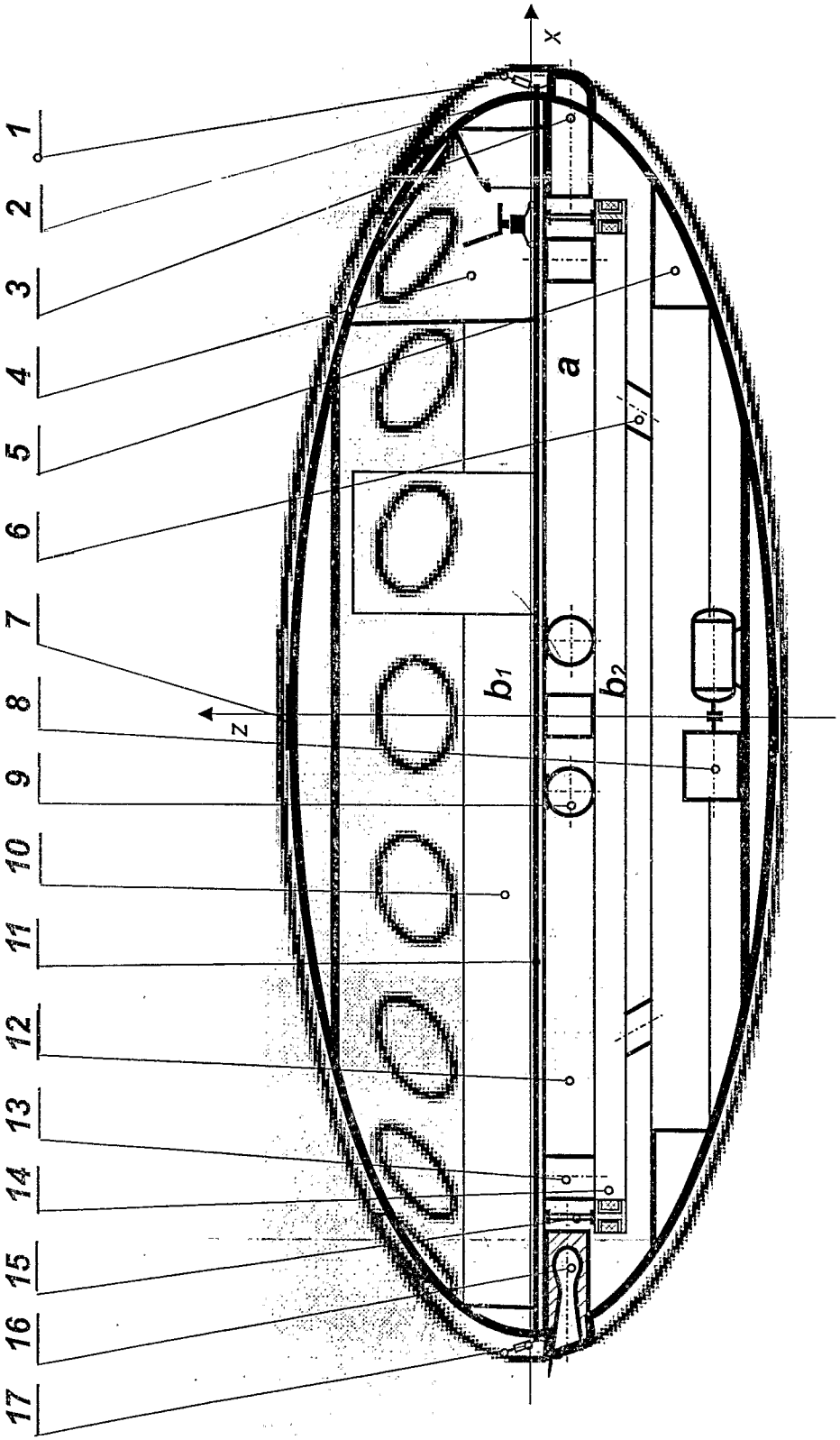

Fig.1

117 || @HighEarthOrbit_ linktr.ee/Grider2

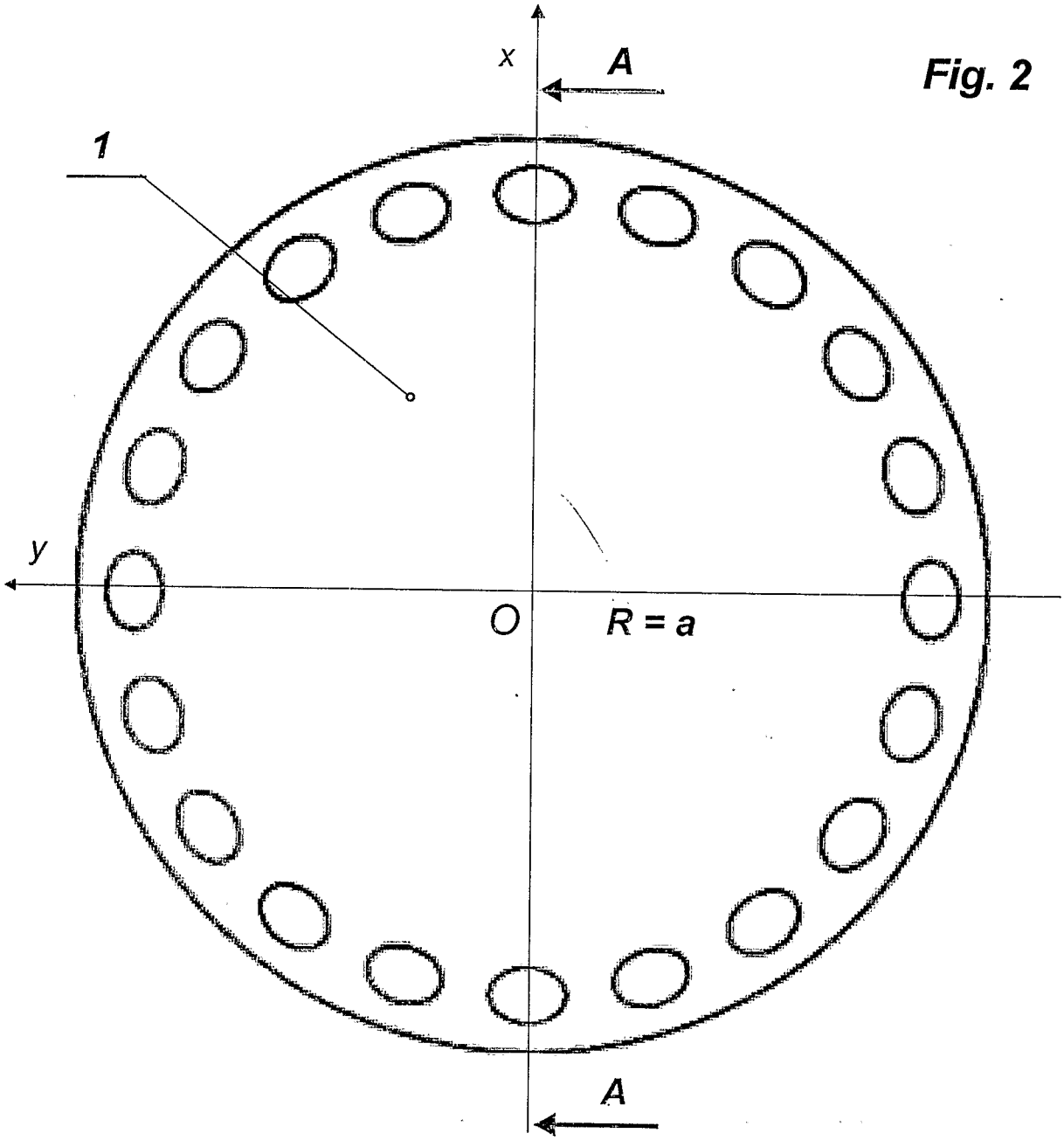

Fig. 2

118 || @HighEarthOrbit_ linktr.ee/Grider2

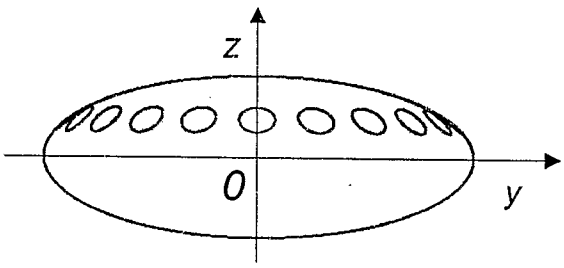

Fig. 3

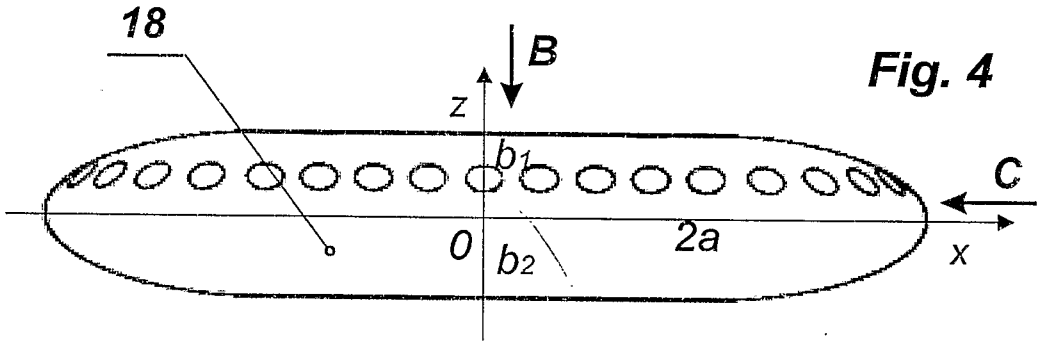

Fig. 4

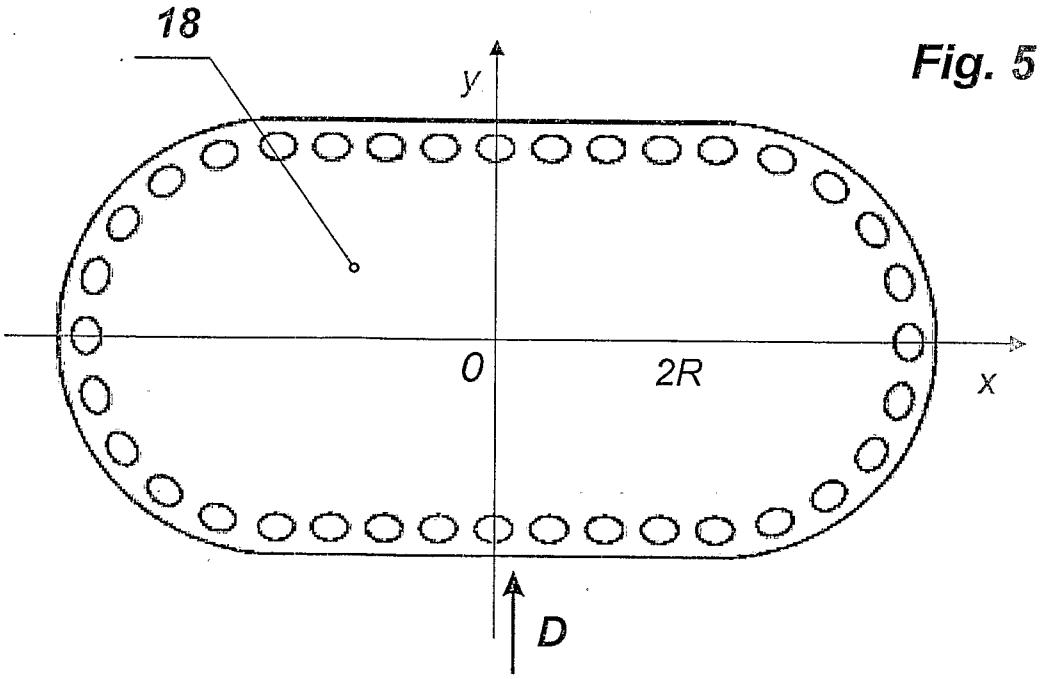

Fig. 5

119 || @HighEarthOrbit_ linktr.ee/Grider2

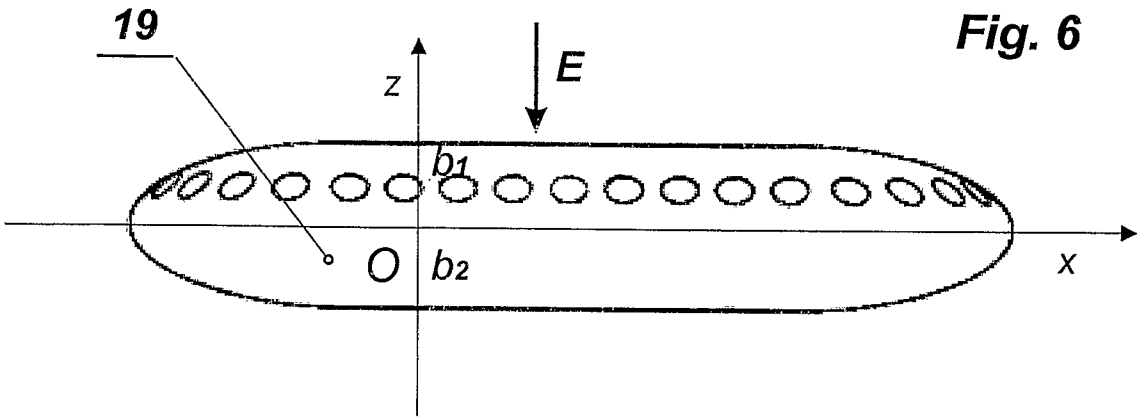

Fig. 6

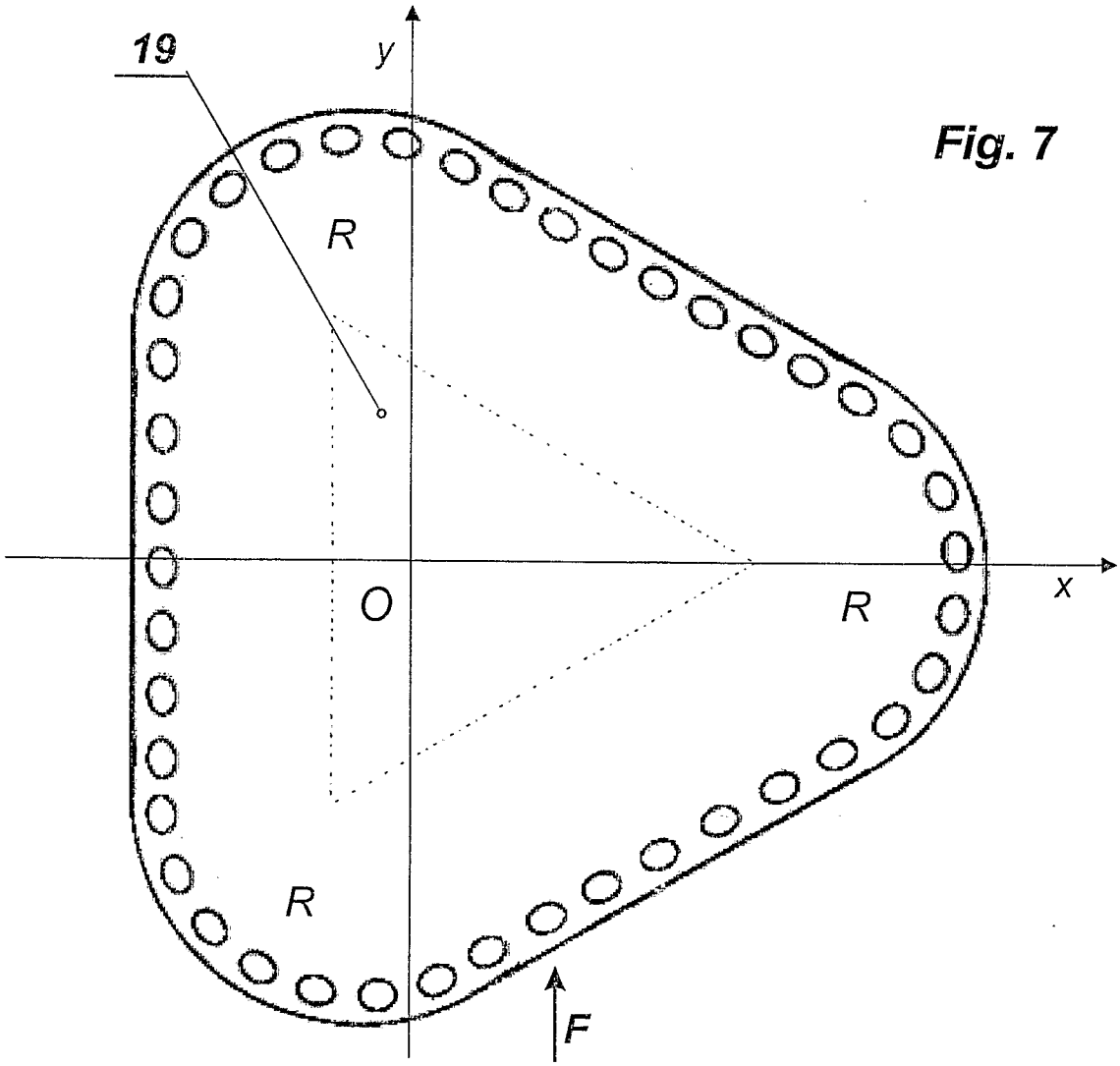

Fig. 7

120 || @HighEarthOrbit_ linktr.ee/Grider2

Fig. 8

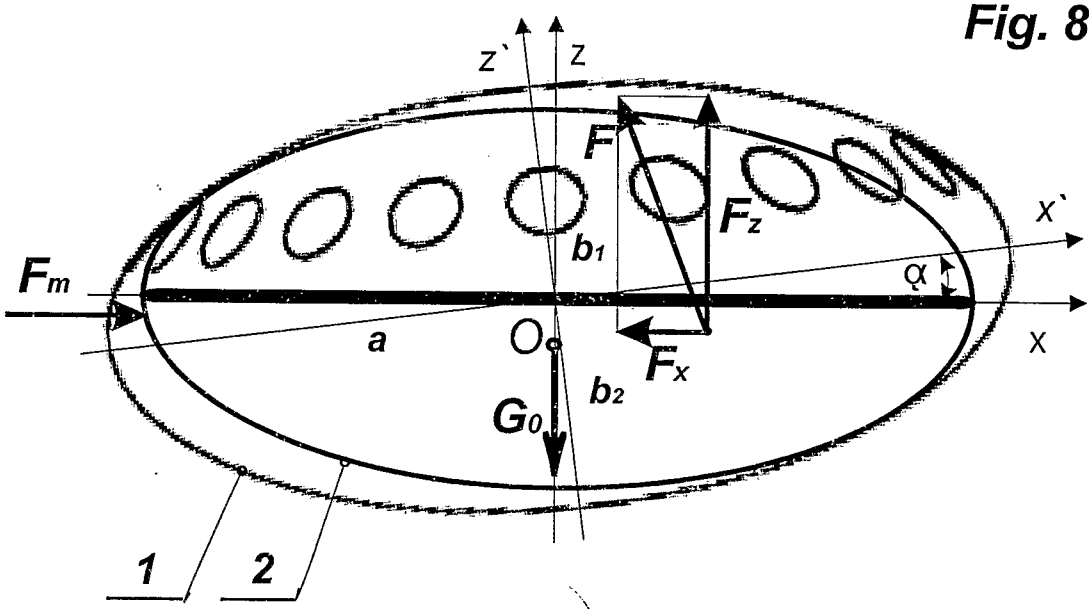

Fig. 9

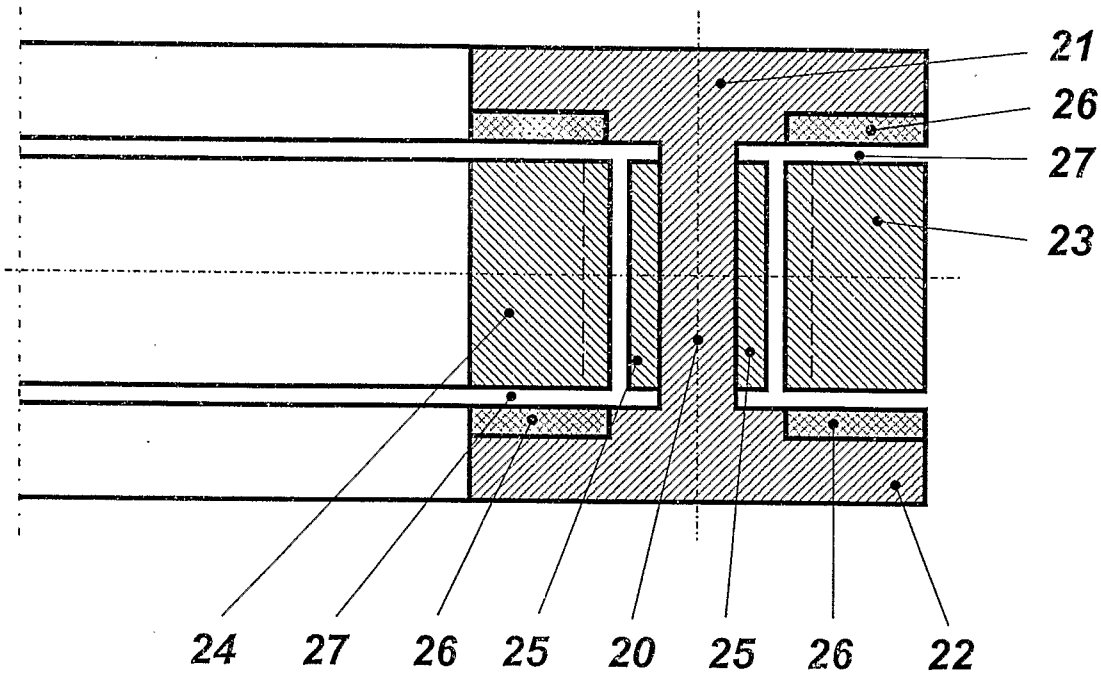

121 || @HighEarthOrbit_ linktr.ee/Grider2

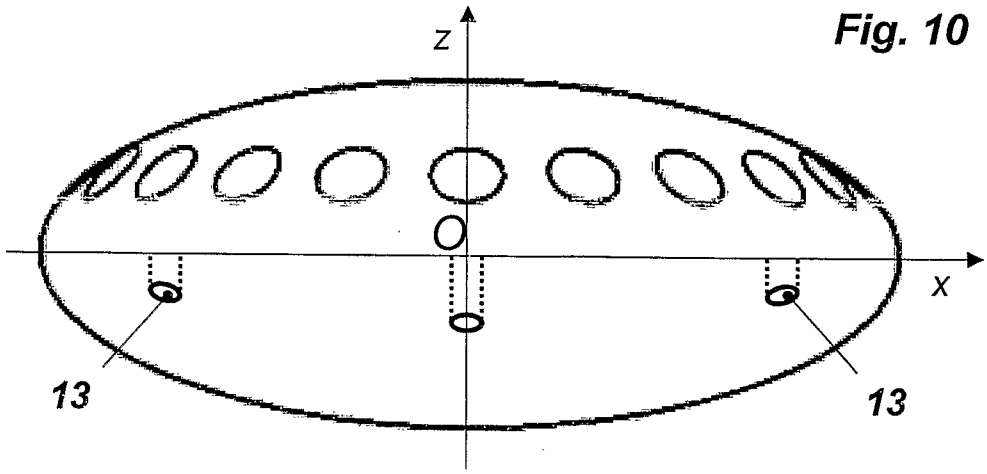

Fig. 10

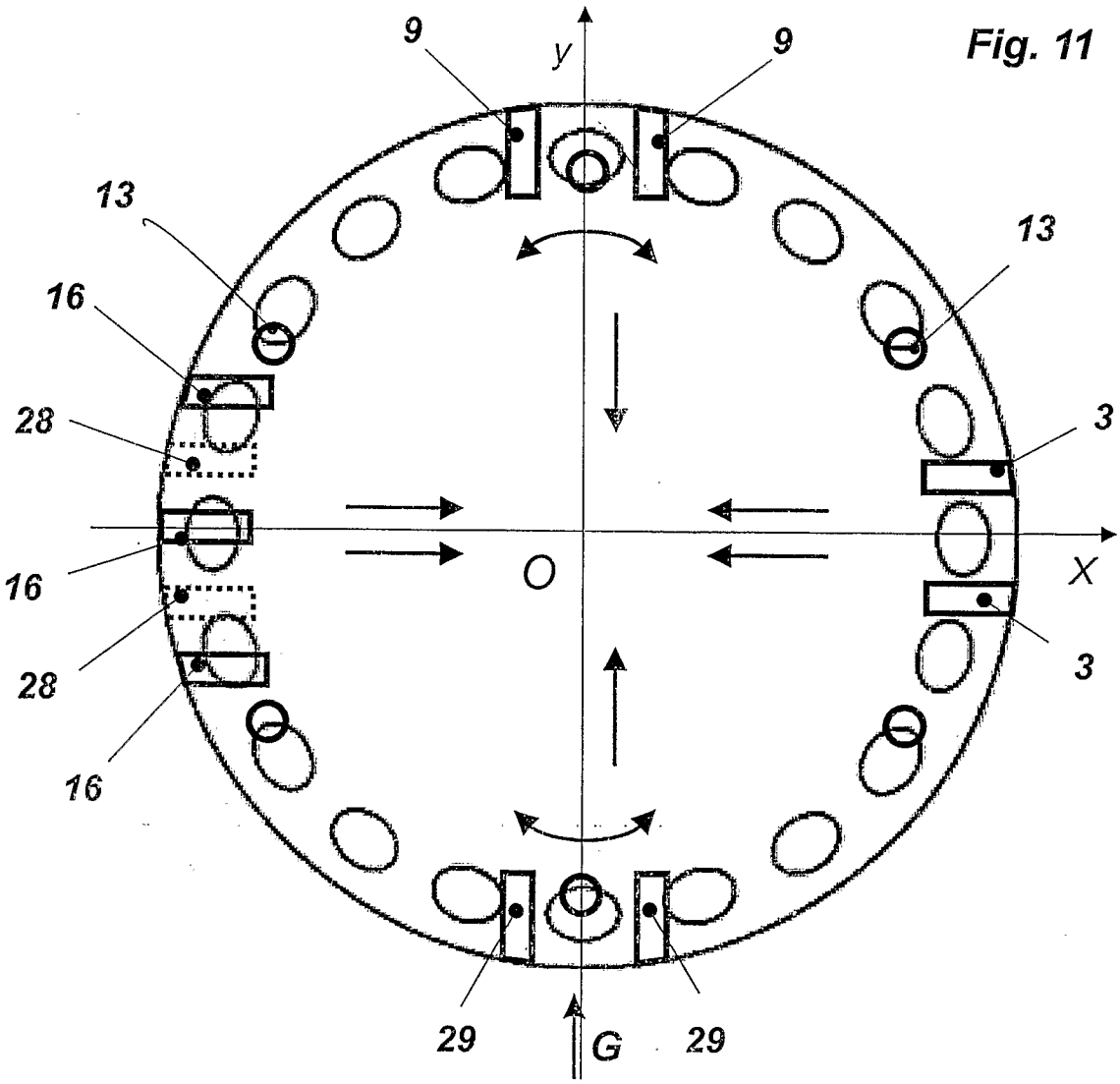

Fig. 11

122 | | @HighEarthOrbit_ linktree/Grider2

INTERNATIONAL SEARCH REPORT

International Application No
PCT/YU 03/00025

A. CLASSIFICATION OF SUBJECT MATTER
IPC 7 B64C39/00 B64G1/40

According to International Patent Classification (IPC) or to both national classification and IPC

B. FIELDS SEARCHED

Minimum documentation searched (classification system followed by classification symbols)
IPC 7 B64C B64G

Documentation searched other than minimum documentation to the extent that such documents are included in the fields searched

Electronic data base consulted during the international search (name of data base and, where practical, search terms used)

WPI Data, EPO-Internal

C. DOCUMENTS CONSIDERED TO BE RELEVANT

Category °	Citation of document, with indication, where appropriate, of the relevant passages	Relevant to claim No.
A	US 5 730 390 A (PLICHTA PETER ET AL) 24 March 1998 (1998-03-24) the whole document ---	1-4
A	DE 198 18 945 A (ROTHKUGEL KLAUS PETER) 4 November 1999 (1999-11-04) the whole document ---	1-4
A	DE 196 30 026 A (REDEL GEORG) 29 January 1998 (1998-01-29) the whole document ---	1-4
A	US 5 259 571 A (BLAZQUEZ JOSE M R) 9 November 1993 (1993-11-09) the whole document ---	1-4
	-/--	

[X] Further documents are listed in the continuation of box C.

[X] Patent family members are listed in annex.

° Special categories of cited documents :

"A" document defining the general state of the art which is not considered to be of particular relevance

"E" earlier document but published on or after the international filing date

"L" document which may throw doubts on priority claim(s) or which is cited to establish the publication date of another citation or other special reason (as specified)

"O" document referring to an oral disclosure, use, exhibition or other means

"P" document published prior to the international filing date but later than the priority date claimed

"T" later document published after the international filing date or priority date and not in conflict with the application but cited to understand the principle or theory underlying the invention

"X" document of particular relevance; the claimed invention cannot be considered novel or cannot be considered to involve an inventive step when the document is taken alone

"Y" document of particular relevance; the claimed invention cannot be considered to involve an inventive step when the document is combined with one or more other such documents, such combination being obvious to a person skilled in the art.

"&" document member of the same patent family

Date of the actual completion of the international search	Date of mailing of the international search report
12 March 2004	18/03/2004

Name and mailing address of the ISA	Authorized officer
European Patent Office, P.B. 5818 Patentlaan 2 NL – 2280 HV Rijswijk Tel. (+31–70) 340–2040, Tx. 31 651 epo nl, Fax: (+31–70) 340–3016	Estrela y Calpe, J

123 | | @HighEarthOrbit linktr.ee/Grider2

INTERNATIONAL SEARCH REPORT

International Application No
PCT/YU 03/00025

C.(Continuation) DOCUMENTS CONSIDERED TO BE RELEVANT

Category °	Citation of document, with indication,where appropriate, of the relevant passages	Relevant to claim No.
A	US 5 351 911 A (NEUMAYR GEORGE A) 4 October 1994 (1994-10-04) the whole document ---	1-4
A	FR 2 081 263 A (PENNACCHIO PIERRE) 3 December 1971 (1971-12-03) the whole document -----	1-4

124 ll @HighEarthOrbit linktr.ee/Grider2

INTERNATIONAL SEARCH REPORT

Information on patent family members

International Application No
PCT/YU 03/00025

Patent document cited in search report		Publication date	Patent family member(s)		Publication date
US 5730390	A	24-03-1998	DE	4215835 A1	02-12-1993
			WO	9511161 A1	27-04-1995
			AU	5335294 A	08-05-1995
			EP	0675823 A1	11-10-1995
DE 19818945	A	04-11-1999	DE	19818945 A1	04-11-1999
DE 19630026	A	29-01-1998	DE	19630026 A1	29-01-1998
US 5259571	A	09-11-1993	ES	2028709 A6	01-07-1992
			DE	4123709 A1	10-09-1992
US 5351911	A	04-10-1994	NONE		
FR 2081263	A	03-12-1971	FR	2081263 A5	03-12-1971

125 || @HighEarthOrbit_ linktr.ee/Grider2

United States Patent [19]

MacNeill

[11] **4,014,483**

[45] **Mar. 29, 1977**

[54] **LIGHTER-THAN-AIR CRAFT**

[76] Inventor: **Roderick M. MacNeill,** 23 Woodbury Road, Southborough, Mass. 01772

[22] Filed: **Sept. 15, 1975**

[21] Appl. No.: **613,221**

[52] **U.S. Cl.** ..... **244/5;** 244/23 C; 244/137 P

[51] **Int. Cl.**[2] **B64C 39/00;** B64B 1/04

[58] **Field of Search** ..... 244/5, 12 C, 23 C, 29, 244/90 R, 137 P

[56] **References Cited**

UNITED STATES PATENTS

3,469,804	9/1969	Rowan	244/12 C
3,514,053	5/1970	McGuinness	244/23 C X
3,752,417	8/1973	Lagace	244/12 C
3,820,744	6/1974	Denton	244/5
3,934,847	1/1976	Bentivegna	244/137 P

Primary Examiner—Stephen G. Kunin
Assistant Examiner—Barry L. Kelmachter
Attorney, Agent, or Firm—Cesari and McKenna

[57] **ABSTRACT**

A lighter-than-air craft having a discus shape. A passenger compartment is located at the top center of the craft and a payload pod at the bottom center beneath the passenger compartment. The pod connects to the passenger compartment by a passageway which extends up through the center of the craft. Moreover, the pod is detachable from the craft, and can be raised or lowered to the ground, thus eliminating the need to land the craft in picking up or discharging passengers and cargo. The discus shape, together with a plurality of automatically controllable ailerons distributed about the circumference of the craft, improve the stability and control of the craft in flight.

12 Claims, 8 Drawing Figures

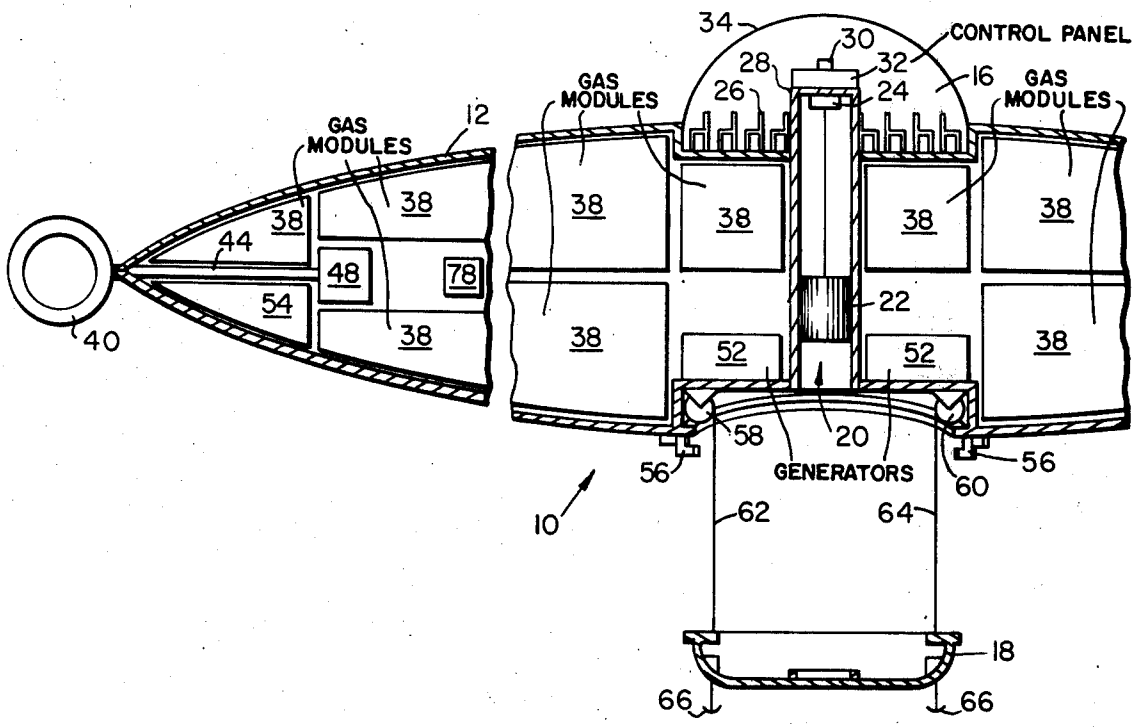

126 || @HighEarthOrbit_ linktr.ee/Grider2

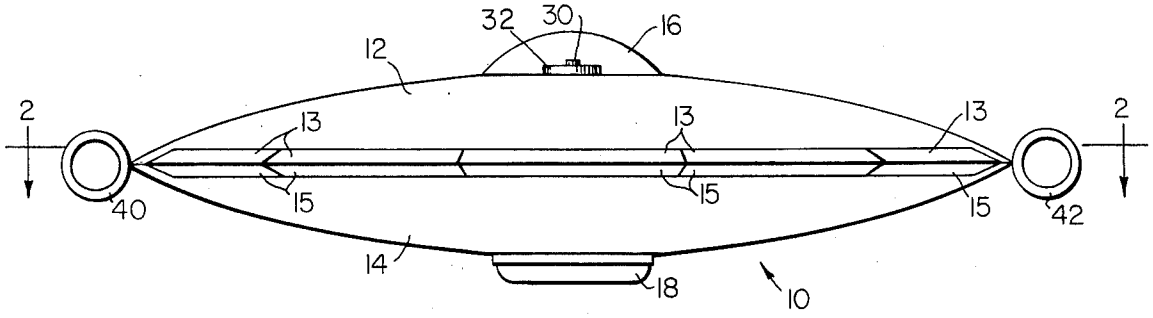

FIG. 1

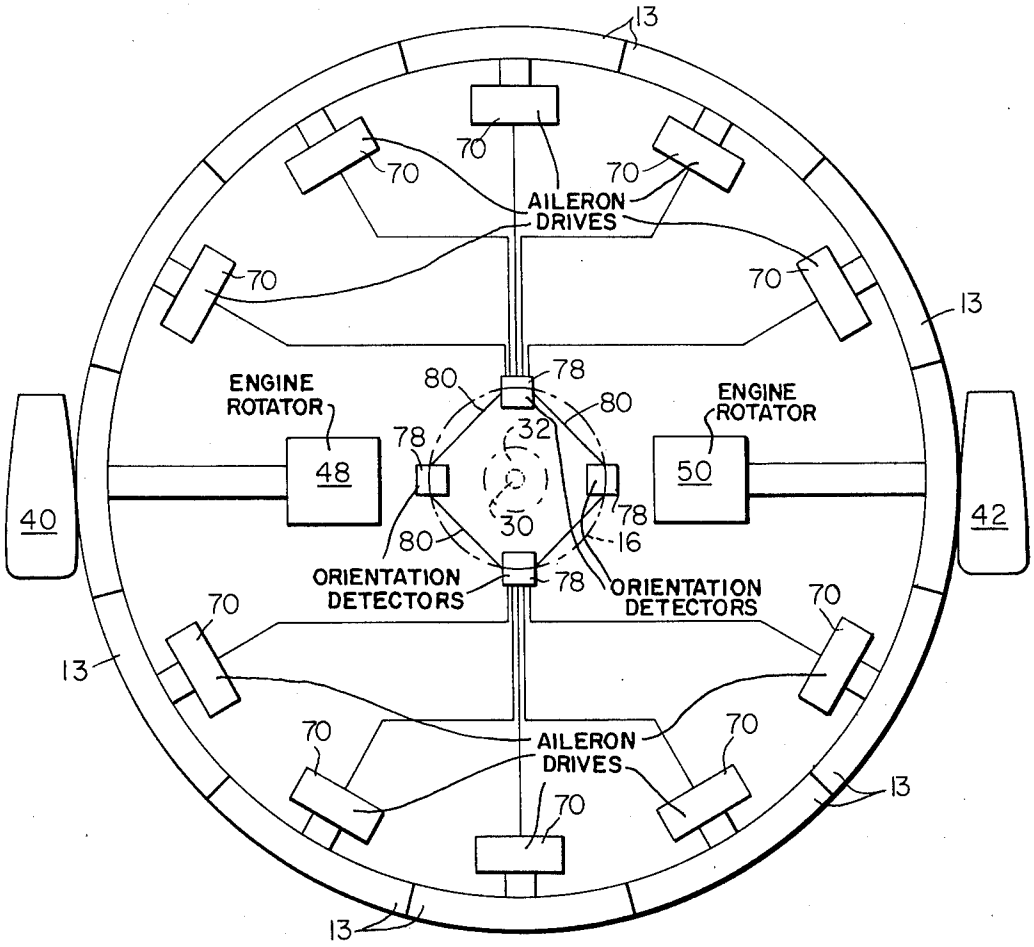

FIG. 2

127 || @HighEarthOrbit_ linktr.ee/Grider2

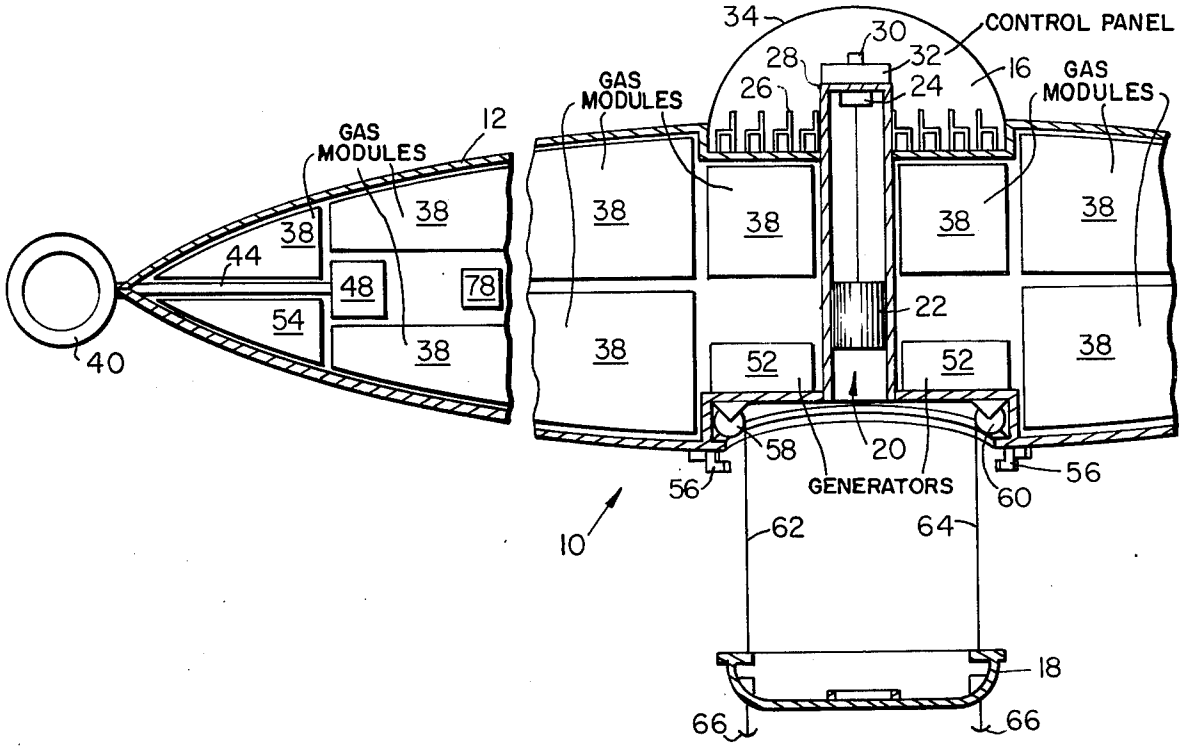

FIG. 3

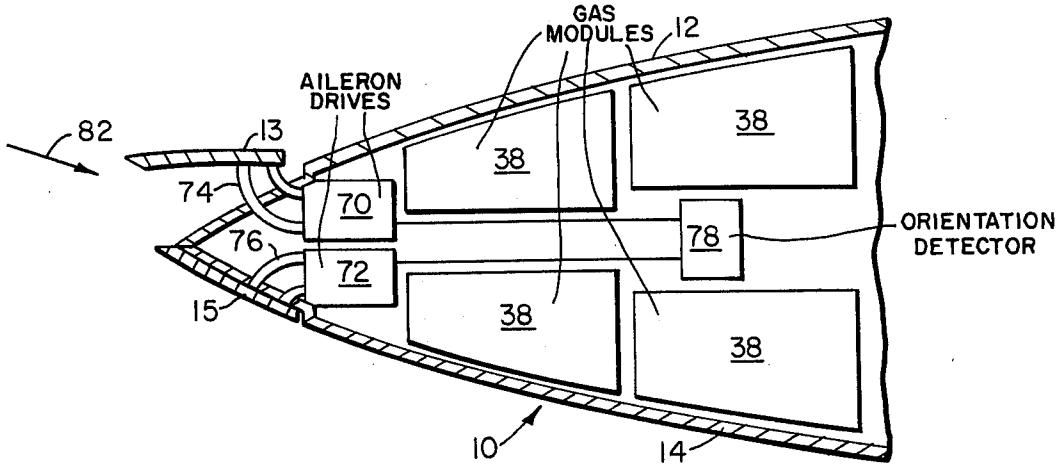

FIG. 4A

128 || @HighEarthOrbit_ linktr.ee/Grider2

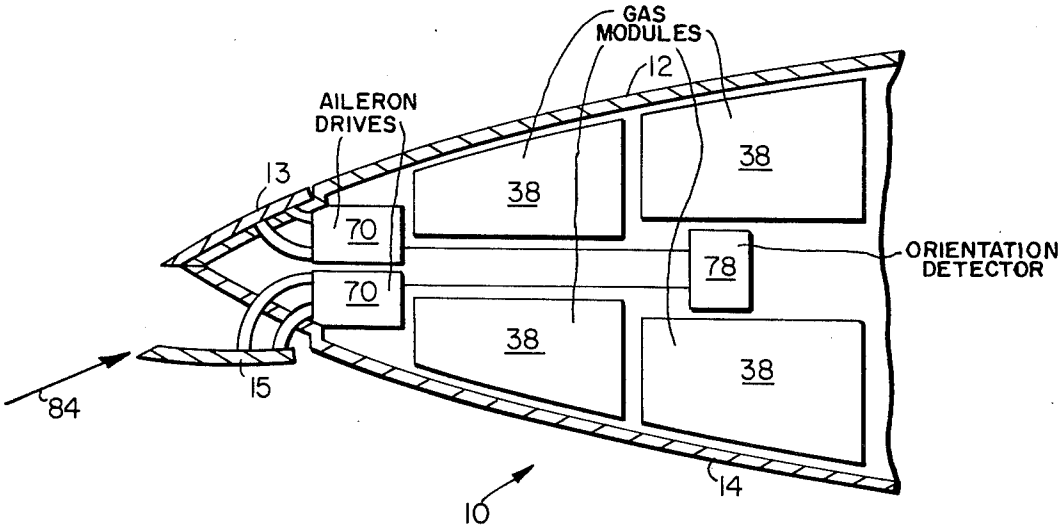

FIG. 4B

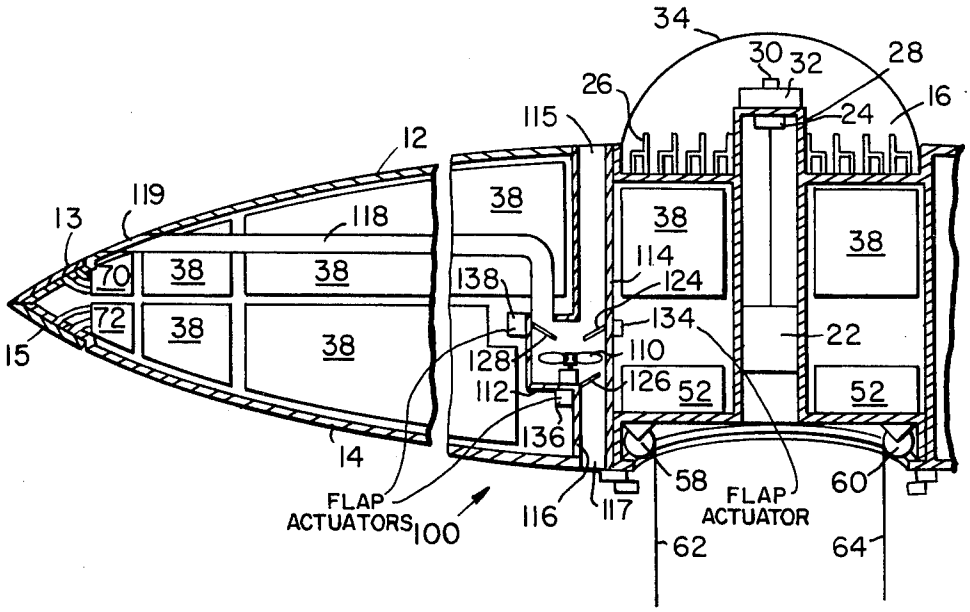

FIG. 7

129 || @HighEarthOrbit_ linktr.ee/Grider2

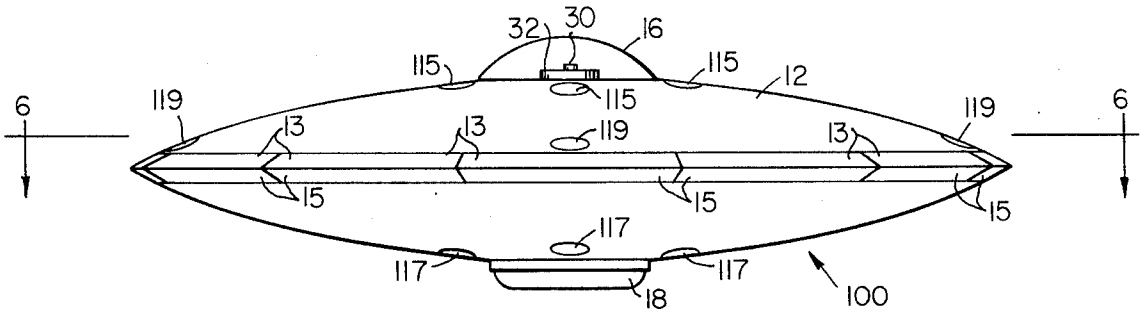

FIG. 5

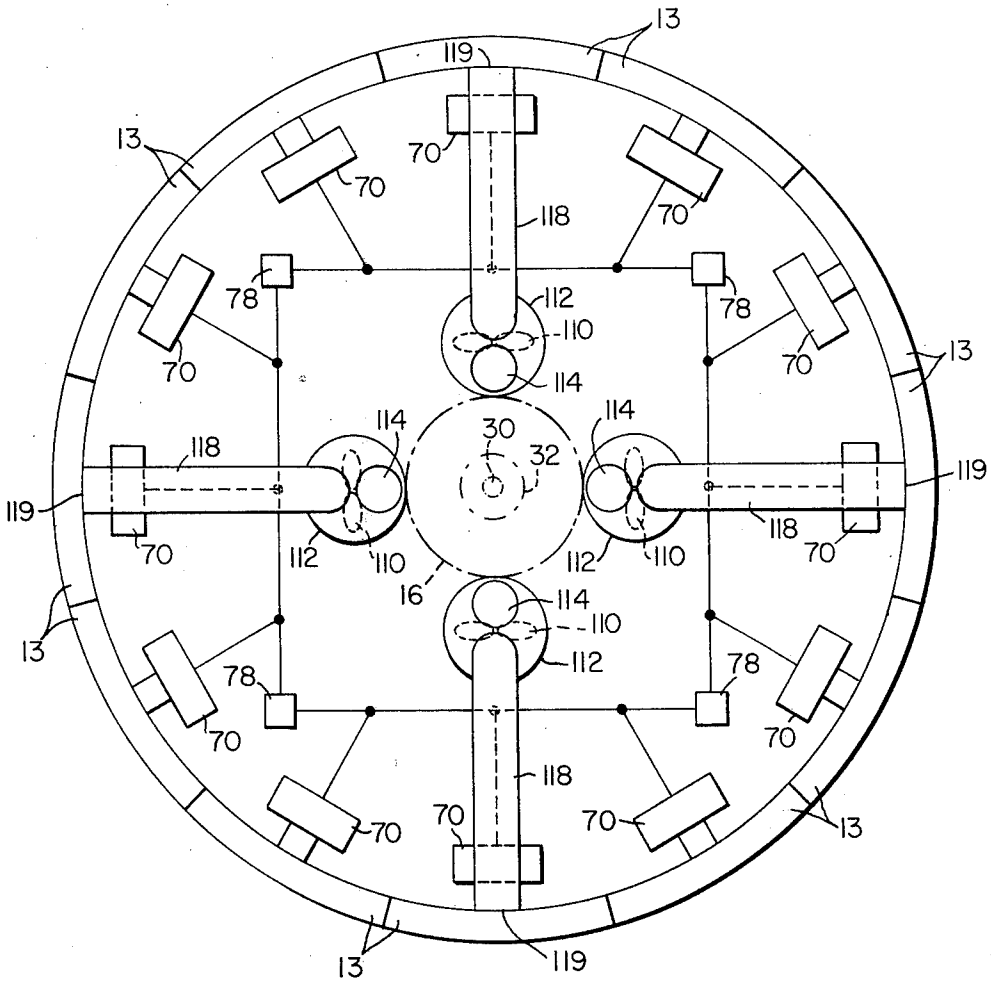

FIG. 6

130 || @HighEarthOrbit_ linktr.ee/Grider2

LIGHTER-THAN-AIR CRAFT

BACKGROUND OF THE INVENTION

This invention relates to aircraft, and more particularly, to a multi-purpose lighter-than-air craft.

Interest has increased recently in lighter-than-air craft as a means of transporting passengers and cargo by air. Unlike the conventional airplane, which requires maintained motion of its wings relative to the air for lift, the lighter-than-air craft is lifted by a contained volume of lighter-than-air gas. Lighter-than-air craft have many desirable features. For example, they land and take off on runways which are shorter than those conventional aircraft of comparable payloads require. They can carry large numbers of passengers and large amounts of cargo. Since they typically consume substantially less fuel during takeoff and landing than conventional aircraft, they can be relatively economical to operate. Additionally, they can be considerably more quiet and less polluting during takeoff and landing than conventional aircraft.

Notwithstanding these features, lighter-than-air craft have experienced little practical use to date. Several reasons account for this limited use.

For example, the lighter-than-air craft presently known in the art are generally difficult to control and manuever during flight. Relatively large, unobstructed ground areas have been required to allow for uncontrolled drift of the craft upon leaving or approaching the ground. These problems are aggravated by high winds and turbulent air currents. Such conditions frequently force the grounding of lighter-than-air craft, thereby reducing productive flight time.

Additionally, in conventional lighter-than-air craft, the pilot is generally required to vent substantial quantities of the lighter-than-air gas to lower the craft to the ground. Special facilities and time must be made available for securely anchoring the craft to the ground during the loading and unloading of passengers and cargo, and for replenishing the supply of lighter-than-air gas for subsequent takeoff.

It is, therefore, an object of this invention to provide a more stable and controllable lighter-than-air craft.

Another object of this invention is to provide an lighter-than-air craft in which the effects of winds and turbulent air currents on the craft's stability are minimized.

Still another object of the invention is to provide a lighter-than-air craft which facilitates loading and unloading of passengers and cargo.

Still another object of the invention is to provide a lighter-than-air craft which minimizes the time and ground space required for loading and unloading passengers and cargo.

SUMMARY

In accordance with this invention, a lighter-than-air craft has a substantially discus shape so as to minimize drag and wind resistance about the craft's circumference. A plurality of ailerons distributed about the circumference of the craft compensate the craft as wind direction and velocity change. Pilot effort in stabilizing the craft therefore is minimized.

In an illustrative embodiment of the craft of this invention, a passenger and crew compartment is located at the top center of the craft, while a payload pod is located at the bottom center beneath the passenger and crew compartment. The pod connects to the passenger and crew compartment by a passageway which extends up through the craft's center. Moreover, the pod is detachable from the craft and can be lowered to the ground with the craft maintained at a considerable altitude above the ground. The craft can thus hover safely above a relatively small ground area to load and unload passengers and cargo, and need land only for periodic maintenance checks and repair.

The invention is pointed out with particularity in the appended claim. The foregoing and other features and advantages of the invention will be better understood by reference to the following detailed description taken in conjunction with the accompanying drawings.

BRIEF DESCRIPTION OF THE DRAWINGS

FIG. 1 is a side elevation of an illustrative embodiment of the aircraft of the invention;

FIG. 2 is a top view of the aircraft of FIG. 1 with the upper hull portion removed for showing control elements internal to the craft;

FIG. 3 is an enlarged cross-sectional view of one end of the craft of FIG. 1;

FIGS. 4A and 4B are enlarged cross-sectional views of one end of the craft illustrating the operation of the ailerons;

FIG. 5 is a side elevation of another illustrative embodiment of the aircraft of the invention;

FIG. 6 is a top view of the craft of FIG. 5 with the upper hull portion removed for showing control elements internal to the craft; and

FIG. 7 is an enlarged cross-sectional view of one end of the craft of FIG. 5.

DETAILED DESCRIPTION

In FIGS. 1, 2, and 3, a lighter-than-air craft 10 comprises upper and lower hull portions 12 and 14, respectively. The hull portions 12 and 14 combine to provide craft 10 with a substantially discus shape. Thus, craft 10 has a maximum height or thickness near its center and a gradually decreasing thickness in a radial direction to the circumference of the craft. Preferably, this craft 10 is symmetrically shaped about a vertical axis which extends through the upper and lower hull portions 12 and 14 at the craft center. Thus, as viewed from the top or bottom, craft 10 is circular in outline, as indicated in FIG. 2. Also, the maximum center height or thickness of the craft is preferably no larger than about one-fifth of its overall diameter. The thickness of the craft at its circumference is preferably as small as possible.

The discus shape of craft 10 minimizes drag and wind resistance about the craft circumference. This reduces the effect of wind on the craft and improves the stability of the craft in flight. A plurality of upper and lower ailerons 13 and 15, respectively, also improve flight stability. As seen in FIG. 1, ailerons 13 and 15 are attached about the circumference of hull portions 12 and 14. When manually or automatically activated, ailerons 13 and 15 move radially outwardly from hull portions 12 and 14, respectively, to provide control surfaces which react with the wind to tilt the craft either upwardly or downwardly as viewed in FIG. 1. They can be automatically controlled to compensate for changes in the craft's orientation due to winds or turbulent air currents. The operation of ailerons 13 and 15 is described in more detail below in connection with FIGS. 4A and 4B of the drawing.

131 || @HighEarthOrbit_ linktr.ee/Grider2

A passenger and crew compartment **16** is located at the top center of hull portion **12**; and a payload pod **18** is located at the bottom center of hull portion **14** under compartment **16**. As seen in FIG. **3**, a vertical, centrally disposed passageway **20** connects the pod **18** and compartment **16**. An elevator **22** located in the passageway **20** and an elevator motor **24** transport passengers and crew between the pod **18** and the compartment **16**. Obviously, other transport means, such as stairs or ladders, could be substituted.

As seen in FIG. **3**, the compartment **16** has a plurality of passenger seats **26**. A pilot's chair **30** is situated on a platform **28** at the center of the compartment **16**. A control panel **32** surrounds the pilot's chair **30** and includes all of the necessary means for activating the various steering, propulsion and control mechanisms of the craft. This control panel **32** and chair **30** arrangement permit the pilot to operate the craft **10** while facing in any direction. Moreover, if a dome **34**, formed of a transparent material, encloses the compartment **16**, both the pilot and passengers have visibility in all directions.

The illustrated configuration of craft **10** has a number of inherent advantages. Since payload is typically a significant fraction of the total weight of the craft, the location of payload pod **18** at the bottom center of the craft provides the craft with a low center of gravity. Additional stability is thus provided in maintaining the craft in level, upright orientation. Passenger and crew compartment **16** is safely positioned at the top center of craft **10**. If the craft is forced to the ground in an emergency, the passengers and crew are maintained in relative safety. The hull portions **12** and **14** would absorb a significant portion of any impact. Although not shown, compartment **16** could include one or more emergency exits, or dome **34** could be made ejectable, in the event that passage through pod **18** is not possible.

A plurality of lighter-than-air, self-contained gas modules **38** (FIG. **3**) are distributed internally of hull portions **12** and **14** to provide lift. A lighter-than-air gas, such as helium, can be used. The use of these modules also has several advantages. For example, if one module is damaged, the total lift capacity of the aircraft is only reduced by a small amount. Thus, even if one module vents all its gas, the pilot can compensate for this loss of lift capacity. Moreover, replacement of damaged modules is less expensive than the repair or replacement of a large gas container. Furthermore, the lift capacity can be tailored to meet the load requirements during a flight either by varying the number of modules that are aboard or by varying the amount of gas that each module contains.

Still referring to FIG. **2**, a pair of jet engines **40** and **42** attached at diametrically opposite positions at the circumference of the craft **10** provide the thrust for propelling the craft in flight. These engines **40** and **42** are rigidly mounted on the ends of shafts, such as shaft **44** extending from rotators **48** and **50**, respectively. As the pilot activates the rotators **48** and **50** to turn the shafts about their longitudinal axes, the jet engines **40** and **42** rotate in a vertical plane. Thus, by controlling the relative thrusts from and orientation of the engines **40** and **42**, the pilot can direct the craft **10** to any orientation. That is, he can cause the craft **10** to move in a forward or reverse direction, to roll, to yaw or to pitch. If the jet engines **40** and **42** are vertically oriented, the pilot can maintain altitude (e.g. in the event of loss of lighter-than-air gas), hasten ascent, or force descent. The ability to force descent leads to yet another advantage: there is no need for venting gas from modules **38** during normal landing operations.

Rotators **48** and **50** and their respective shafts represent means for rotating the jet engines **40** and **42** in response to pilot or automatic command control. For example, they may comprise electric motors which operate in response to electrical control signals from control panel **32**. Power to these motors, the control panel **32**, and to other mechanisms in craft **10**, such as elevator motor **24**, can be provided by generators **52** or any other suitable power source (e.g. batteries). Alternatively, rotators **48** and **50** may be components in a hydraulic system.

Fuel for jet engine **40** is contained in a fuel tank **54** (FIG. **3**) located within hull portion **14** at the bottom of the craft. A similar fuel tank, not shown in FIG. **3**, is provided at the other end of the craft for jet engine **42**. Although not shown, suitable safety barriers, such as vertical explosion and fire retardant walls extending between hull portions **12** and **14**, would be located in the craft to shield compartment **16** and pod **18** from the various fuel tanks.

Control panel **32** includes means accessible to the pilot for starting and stopping the jet engines **40** and **42**. The pilot can thus shut the engines down when not needed, for example, when parking craft **10** in the air, and turn the engines back on, for example, when departure from the air space is desired, all while sitting at control panel **32**.

As indicated in FIG. **1** and best seen in FIG. **3**, payload pod **18** can be detached from hull portion **14** and lowered to the ground. Retractable clamps **56** attached to hull portion **14** hold pod **18** in position at the bottom of craft **10**. When they are released, hydraulic or electric motors **58** and **60** can lower the pod **18** by means of cables **62** and **64**. Preferably, the cables **62** and **64** are long enough to lower the pod **18** to the ground with craft **10** hovering safely at a considerable altitude (e.g., 100 feet or more) above the ground. Anchors **66** secure the pod **18** to the ground while passengers and cargo are loaded and unloaded. Although not shown in FIG. **3**, the pod **18** includes one or more access doors.

Thus, cargo and passengers can be loaded in or unloaded from payload pod **18** on the ground without ever landing craft **10**. Only a relatively small ground space, sufficient in size to accommodate pod **18**, is required for the exchange. The area can be otherwise obstructed with tall trees or buildings which can be safely avoided by maintaining sufficient altitude of craft **10**. The equilibrium of craft **10** in the air above pod **18** is maintained automatically by ailerons **13** and **15**, or, if necessary, manually by the pilot using jet engines **40** and **42**.

In accordance with another aspect of this configuration, the anchors **66** can be set with the pod **18** on the ground and the motors **58** and **60** can be energized to winch the craft **10** to the ground. Additionally, the cables **62** and **64** may be releasably connected to the pod **18**, thereby to facilitate the exchange of pods.

Referring to FIGS. **4A** and **4B**, aileron drives **70** and **72** connect to ailerons **13** and **15** by way of arms **74** and **76**, respectively. The drives **70** and **72**, which are typically electric motors, form part of a servomechanism including a craft orientation detector **78**. As shown in FIG. **2**, there are illustratively four of such detectors **78** in craft **10** and each one of the four is electrically interconnected by leads **80**. Detectors **78** sense changes in

132 || @HighEarthOrbit_ linktr.ee/Grider2

the orientation of craft **10** from a reference plane, e.g., horizontal. Each detector may comprise a gyroscope or mercury switch which develops an error signal indicative of a change in craft orientation. These error signals are in turn sent to selected ones of drives **70** and **72** to activate their associated ailerons and to compensate for the change.

For example, in FIG. **4A**, an upper aileron **13** is shown in an activated position away from hull portion **12.** It is assumed that a wind blowing essentially in the direction indicated by arrow **82** has caused the end of craft **10** shown in FIG. **4A** to move downwardly out of the desired orientation, and has caused one of detectors **78** to sense this and to move aileron **13** into the position shown. The wind will react with aileron **13** in the illustrated position, generating a upward force on the inner surface thereof, which causes the end of craft **10** to move upwardly, thus compensating for the change initially caused by the wind.

In FIG. **4B**, a lower aileron **15** is shown in an activated position away from hull portion **14.** It is assumed in this case that a wind blowing essentially in the direction indicated by arrow **84** has moved the end of craft **10** shown in FIG. **4B** upwardly, causing one of detectors **7B** to sense this and to activate aileron **15.** The wind now exerts a downward force on the inner surface of aileron **15**, causing the end of craft **10** to move downwardly, again compensating for the change initially caused by the wind.

Ailerons **13** and **15** in this way assist in maintaining the equilibrium of craft **10**, even in face of changing winds, and turbulent air currents. The servomechanism comprised of the detectors **78**, drives **70** and **72**, and ailerons **13** and **15** is preferably designed with a speed of response considerably shorter than a pilot could provide in manually adjusting the ailerons. Also, to compensate for particular changes in the attitude of craft **10**, it is preferable that more than one aileron be activated at a given time. For example, at one end of craft **10**, two or more adjacent upper ailerons **13** may be activated, while at the opposite end of craft **10**, two or more lower ailerons are activated. Moreover, adjacent ailerons may be activated to differing levels and angles of inclination, thus imparting a warping effect about the circumference of the craft.

The pilot is also provided with control means such as a joy stick control at panel **32** for disabling the servomechanism and for manually operating ailerons **13** and **15** to assist the steering of craft **10** during maintained flight through the air. For example, the ailerons can be used by the pilot to initiate a departure from level flight.

The craft embodiment **100** shown in FIGS. **5, 6,** and **7** contains an internal propulsion mechanism. Otherwise, the craft **100** is similar in construction to craft **10** of FIGS. **1** through **4** and like reference numerals indicate like components in the Figures.

As seen in FIGS. **6** and **7**, the craft **100** includes four fans mounted near the center of gravity of the craft. As best seen in FIG. **7**, each fan **110** is separately enclosed in a housing **112**, and three air ducts extend from each housing **112.** A first air duct **114** extends upwardly in the craft to an opening **115** at the top of hull portion **12.** A second air duct **116** extends downwardly in the craft to an opening **117** at the bottom of hull portion. A third air duct **118** extends laterally in the craft to an opening **119** (FIG. **5**) near the craft circumference.

At the juncture of the air ducts **114, 116,** and **118** and housing **112**, adjustable pivoted flaps **124, 126,** and **128**, movable by flap actuators **134, 136,** and **138**, respectively, vary the relative air flow through each duct. Flap actuators **134, 136,** and **138**, which are typically electric motors, are controllable by the pilot through suitable control means located at control panel **32.** Also, the pitch of each fan **110** is variable by the pilot through suitable control means at control panel **32** to vary the rate and direction of the air flow through ducts **114, 116** and **118.** Fans **110** can thus move air upwardly, downwardly or laterally through the craft depending upon the flap and fan pitch selections made by the pilot.

The pilot can use this propulsion mechanism to propel craft **100** in a forward, reverse or lateral direction, or to hasten ascent or force descent of the craft. For example, to force descent of craft **100**, the pilot activates flap **128** to close lateral air duct **118.** Flaps **124** and **126** are left open. The pitch of a fan **110** is selected to draw air from opening **117** at the bottom of the craft and to exhaust it at opening **115** at the top of the craft. A similar control selection for each of the four fan **110** causes craft **100** to move downwardly in the air.

To propel craft **100** in a particular lateral direction, two diametrically opposed fans **110** aligned along that direction. may be used. In each of these two fans, flap **124** is activated to close duct **114**, while flaps **128** and **126** are left open. The pitch of one of these two fans is selected to draw air from opening **117** at the bottom of the craft and to exhaust it at opening **119** at one end of the craft. The pitch of the other of the two fans **110** selected to move air in the opposite direction, namely to draw air from opening **119** at the other end of the craft and to exhaust it at opening **117** at the bottom of the craft. The combined action of the two fan **110** causes craft **100** to move laterally through the air along a line of flight passing through the two fans **110** being utilized. As will be apparent, numerous other combinations of flap positions and fan pitch selections make various other craft manuevers possible.

Variable pitch fans **110** and flap actuators **134, 136,** and **138** can each be electrically operated and powered by generators **52.** Alternatively, fans **110** may be powered by internal combustion engines.

Thus, lighter-than-air craft constructed in accordance with the various embodiments of the invention have several advantages. The discus shape, combined with the automatically controllable ailerons distributed about the circumference of the craft, increase stability and facilitate control. The adverse effects of changing winds and turbulent air currents on the craft, even while hovering, are reduced. Cargo and passengers can be loaded into or unloaded from the craft without the need of bringing the craft to the ground. The time and ground space required for loading and unloading procedures are minimized.

As will be apparent, the above-described craft are illustrative only of two specific embodiments of this invention, and can be modified in many ways by those skilled in the art. For example, deviations from a circular outline shown in FIGS. **2** and **6** can be made in each craft while still maintaining the discus-like shape. The size of the craft can be selected in terms of the payload to be carried. The propulsion mechanism described in connection with craft **100** can be varied in many ways. Instead of four variable pitch fans, one or more jet engines mounted internally of the craft could be used

133 || @HighEarthOrbit_ linktr.ee/Grider2

to move air through the propulsion control air ducts. Instead of, or in addition to, the air flow control flaps mounted internally of the craft **100**, air control means, such as pivoted flaps or vanes, could be mounted at each air duct opening at the craft's outer surface. More or fewer air ducts. than are shown in craft **100** could be included. Also, in both of the embodiments, I described specific placements for various items such as passenger chairs, pilot chair and control panel, engines, power supplies and other items. These locations could change from craft to craft. Hence, I believe that these and other modifications are clearly within the true spirit and scope of the invention, and it is the object of the appended claims to cover all such modifications.

What I claim as new and desire to secure by Letters Patent of the United States is:

1. A lighter-than-air craft comprising:

A. a discus-shaped hull including upper and lower hull portions;

B. means for containing internally of said hull a volume of a lighter-than-air gas to provide lift to said craft;

C. propulsion means mounted to said hull for moving said craft in flight;

D. means for controlling said propulsion means; and

E. stabilizing means comprising a plurality of ailerons distributed about the periphery of said upper hull portion and a plurality of ailerons distributed about the periphery of said lower hull portion, said ailerons being selectively movable relative to said hull portions to provide variable control surfaces for changing the orientation of said craft in flight.

2. A lighter-than-air craft as recited in claim **1** in which said hull is substantially symmetrically shaped about a vertical axis through the center of the craft, whereby the periphery of said hull is essentially circular in shape.

3. A lighter-than-air craft as recited in claim **2** in which the maximum thickness of said hull is no larger than about one-fifth of the overall diameter of said hull.

4. A lighter-than-air craft as recited in claim **2** in which said stabilizing means further includes

i. means for sensing a change in the orientation of said craft, and

ii. means coupled to said craft orientation sensing means for automatically actuating at least one of said ailerons to compensate for the sensed change.

5. A lighter-than-air craft as recited in claim **1** further including a passenger and crew compartment located at the top center of said hull.

6. A lighter-than-air craft as recited in claim **1** further including a payload pod located at the bottom center of said hull.

7. A lighter-than-air craft as recited in claim **6** in which said pod is detachable from said hull and said craft further includes means for raising and lowering said pod to the ground while said craft maintains altitude above the ground, whereby passengers and cargo can be loaded into and unloaded from said pod without bringing said craft to the ground.

8. A lighter-than-air craft as recited in claim **1** wherein

A. said propulsion means includes first and second jet engines mounted at diametrically opposite positions at the periphery of said hull, said jet engines being rotatable in a vertical plane; and

B. said propulsion means includes means for rotating said jet engines in the vertical plane to vary the direction of thrust therefrom.

9. A lighter-than-air craft as recited in claim **1** wherein:

A. said propulsion means includes a plurality of air ducts communicating between an internal portion of said hull and opening at the exterior surface of said hull, and at least one fan mounted internally of said hull for moving air through said air ducts; and

B. said propulsion control means includes means for varying the direction and volume of air moving through said air duct.

10. A lighter-than-air craft as recited in claim **1** in which said lighter-than-air gas containing means comprises a plurality of discrete lighter-than-air gas containing modules distributed internally of said hull.

11. A lighter-than-air craft comprising:

A. a hull including upper and lower hull portions, said hull being discus shaped with a maximum thickness at the center of the hull and a gradually decreasing thickness in a radial direction to the periphery of the hull;

B. means for containing internally of said hull a volume of a lighter-than-air gas to provide lift to said craft;

C. propulsion means mounted to said hull moving said craft in flight;

D. means for controlling said propulsion means;

E. stabilizing means comprising

i. a plurality of ailerons distributed about the periphery of said upper hull portion;

ii. a plurality of ailerons distributed about the periphery of said lower hull portion;

iii. said ailerons being selectively movable relative to said hull portions to provide variable control surfaces for changing the orientation of said craft in flight;

F. a passenger and crew compartment located at the top center of said upper hull portion;

G. a payload pod located at the bottom center of said lower hull portion beneath said passenger and crew compartment;

H. a passageway connecting said payload pod to said passenger and crew compartment and extending through the center of said hull;

I. means for detaching said payload pod from said hull; and

I. means for detaching said payload pod from said hull; and

J. means for raising and lowering said payload pod to the ground while said craft maintains altitude above the ground whereby passengers and cargo can be loaded into and unloaded from said pod without bringing said craft to the ground.

12. A lighter-than-air craft as recited in claim **11** in which said stabilizing means is automatically controllable and further includes means for sensing a change in the orientation of said craft and means coupled to said craft orientation sensing means for automatically actuating at least one of said ailerons to compensate for the sensed changed.

* * * * *

Sept. 20, 1955 E. L. CRABTREE 2,718,364
FLUID SUSTAINED AND PROPELLED AIRCRAFT
HAVING ANNULAR SHAPED BODY
Filed July 30, 1953 3 Sheets-Sheet 1

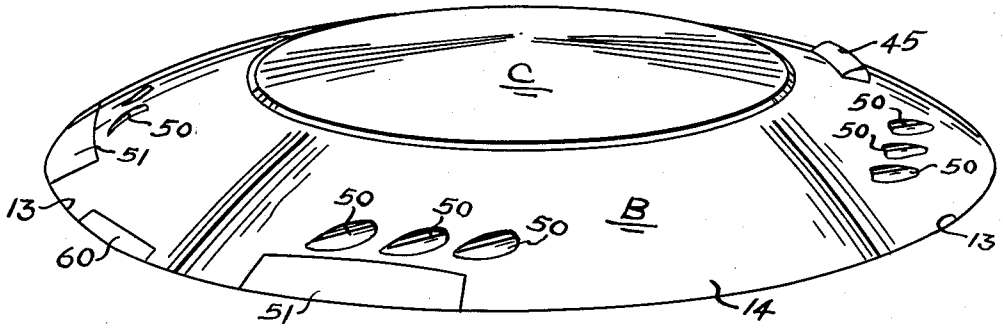

FIG. 1

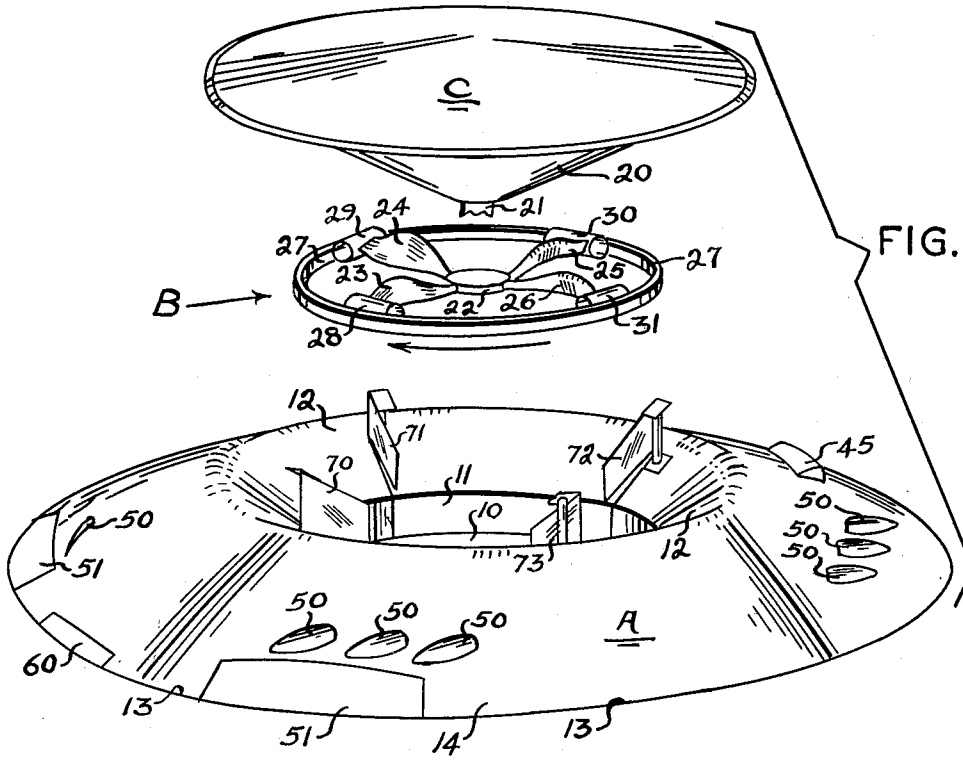

FIG. 2

Ernest L. Crabtree
INVENTOR,

BY Bernard P. Miller
ATTORNEY

135 || @HighEarthOrbit_ linktr.ee/Grider2

Sept. 20, 1955 E. L. CRABTREE 2,718,364
FLUID SUSTAINED AND PROPELLED AIRCRAFT
HAVING ANNULAR SHAPED BODY
Filed July 30, 1953 3 Sheets-Sheet 2

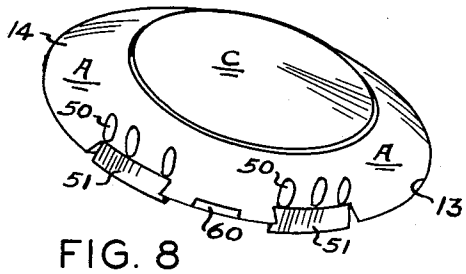

FIG. 8

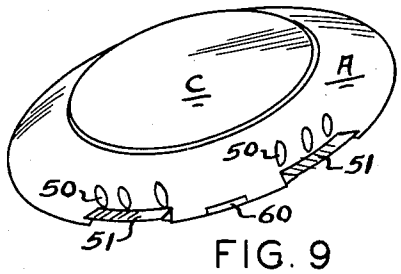

FIG. 9

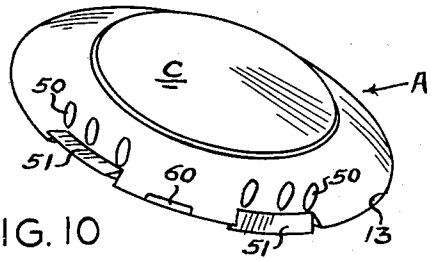

FIG. 10

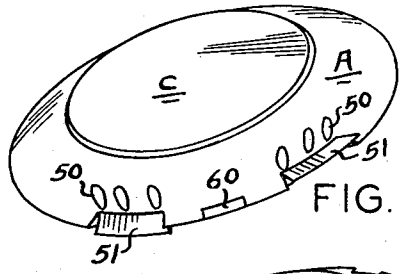

FIG. 11

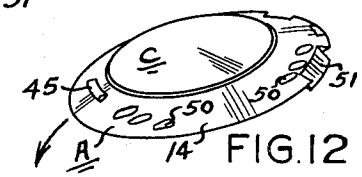

FIG. 12

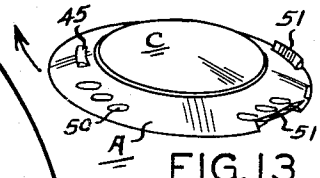

FIG. 13

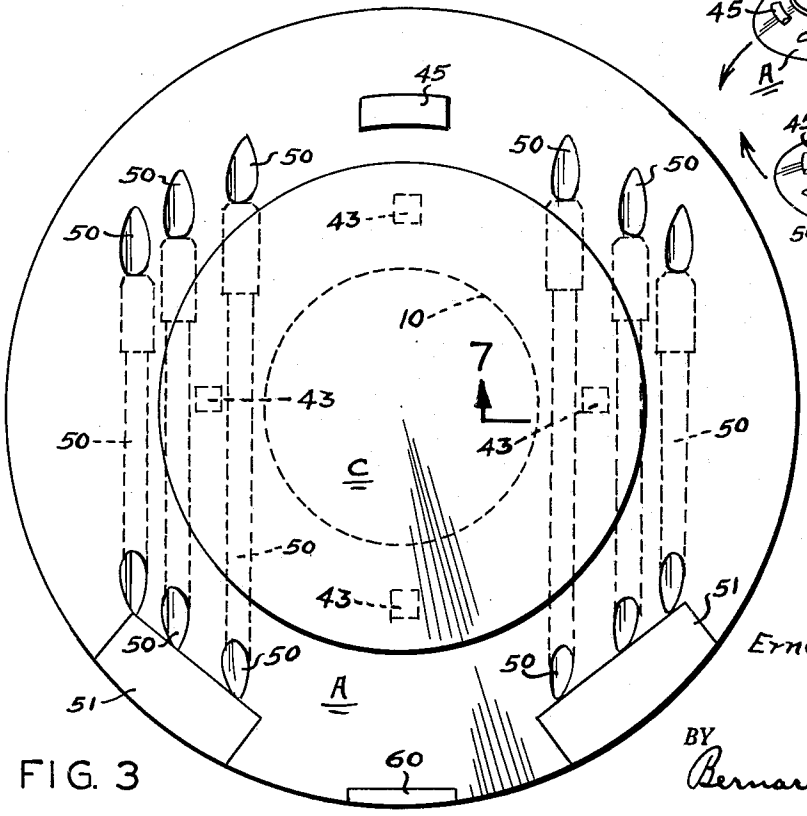

FIG. 3

Ernest L. Crabtree
INVENTOR,

BY Bernard P. Miller
ATTORNEY.

Sept. 20, 1955 E. L. CRABTREE 2,718,364
FLUID SUSTAINED AND PROPELLED AIRCRAFT
HAVING ANNULAR SHAPED BODY
Filed July 30, 1953 3 Sheets-Sheet 3

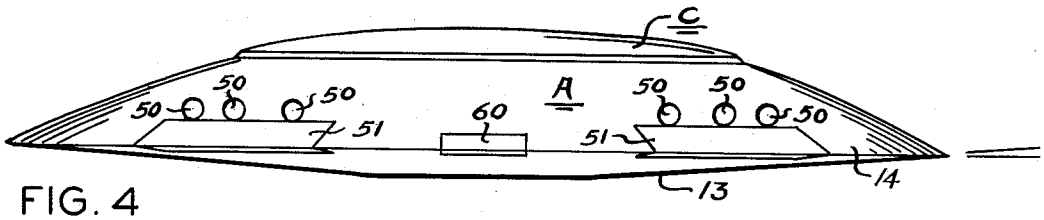

FIG. 4

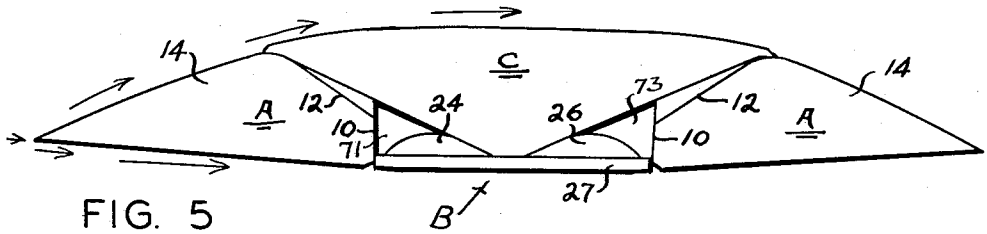

FIG. 5

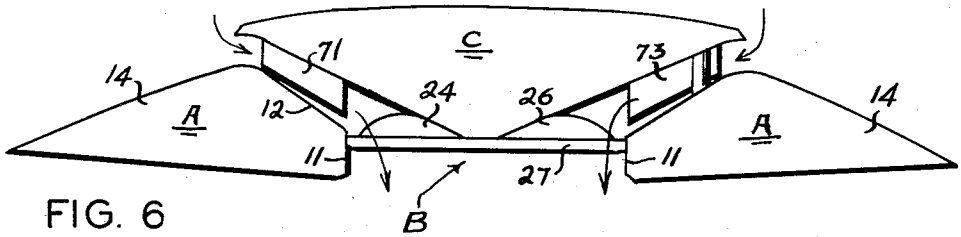

FIG. 6

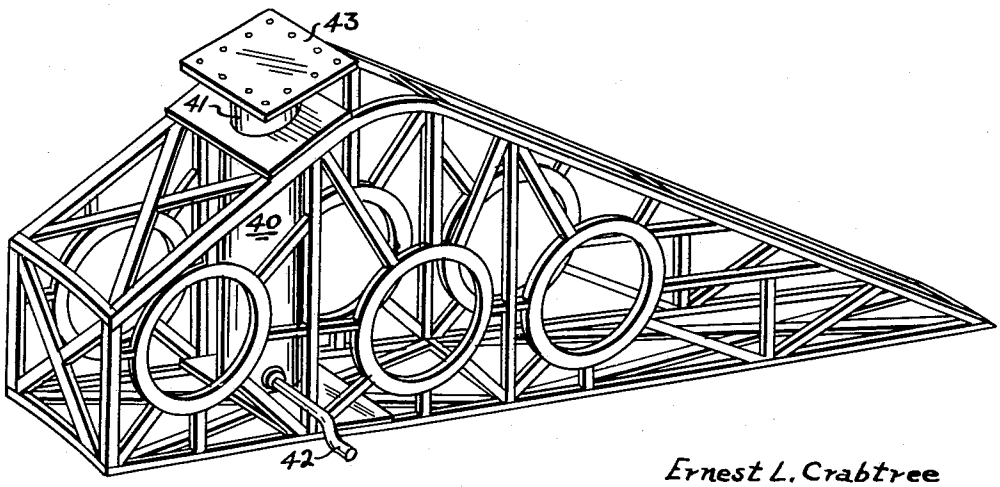

FIG. 7

Ernest L. Crabtree
INVENTOR,

BY
Bernard P. Miller
ATTORNEY

137 || @HighEarthOrbit_ linktr.ee/Grider2

United States Patent Office

2,718,364

Patented Sept. 20, 1955

1

2,718,364

FLUID SUSTAINED AND PROPELLED AIRCRAFT HAVING ANNULAR SHAPED BODY

Ernest L. Crabtree, Midwest City, Okla.

Application July 30, 1953, Serial No. 371,324

6 Claims. (Cl. 244—12)

The invention relates to aircraft, and more particularly to aircraft commonly typed as "heavier than air."

The prime object of the invention is to provide a wingless "heavier than air," aircraft.

A further object is to provide an aircraft in which the fuselage is generally flat, and is annular in configuration.

Another object is to provide an aircraft of this type which has means for traveling vertically as well as laterally, and which is also provided with means for controlling the tilt thereof.

An additional object is to provide, in such an aircraft, a means for overcoming the normal tendency of the craft to rotate with its own propeller.

A still further object is to provide a "heavier than air" aircraft, which is so designed, that it may readily be powered by conventional jet propulsion apparatus.

Other objects will be apparent from the following description when taken in conjunction with the accompanying three sheets of drawings, wherein:

Figure 1 is a perspective view looking downwardly upon the device;

Figure 2 is an exploded perspective view illustrating the assembly of the principal elements of the aircraft;

Figure 3 is a top view;

Figure 4 is an elevational view looking at the rear of the device;

Figure 5 is a diagrammatic elevational view depicting air flow when the craft is in directional flight;

Figure 6 is a view similar to Fig. 5, but showing a control element in its raised position, and indicating air flow when the craft is in vertical motion;

Figure 7 is a perspective view illustrating one manner of reinforcing or constructing the framework of the device;

Figure 8 is a perspective view looking downwardly upon the device, and showing the ailerons depressed;

Figure 9 is a view similar to Fig. 8, but showing the ailerons both raised;

Figure 10 is a view similar to Fig. 8, and showing one aileron raised and the other one lowered;

Figure 11 is a view similar to Fig. 10 showing the ailerons reversed;

Figure 12 is a perspective view looking at one side of the device shown in Fig. 8; and,

Figure 13 is a similar view of the device shown in Fig. 9.

Like characters of reference designate like parts in those figures of the drawings in which they occur.

In the drawings:

The reference character A indicates, as a whole, the fuselage of the device, the reference character B indicates, as a whole, the propeller of the device, and the reference character C indicates, as a whole, the principal air control element of the device.

The fuselage A is annular in general configuration having a round central aperture **10**, bounded by a vertical annular wall **11**. Immediately surrounding the vertical annular wall **11**, there is provided an upwardly and outwardly tapered or slanting wall **12**, which extends to the top of the fuselage. The fuselage is exteriorly bounded by a generally circular rim **13**, and between the rim **13** and the upper edge of the wall **12**, the surface of the fuselage is tapered downwardly and outwardly. This tapered surface is indicated, as a whole, by the reference character **14**.

Interiorly, the fuselage A is constructed of aluminum braces, struts, etc., which may assume the general form of construction as illustrated in Fig. 7 of the drawings. The particular manner of bracing the interior of the fuselage is not particularly pertinent to the present invention, so long as it has the desired strength.

As a means for controlling the flow of air through the aperture **10** of the fuselage A, the control element C is provided, the lower portion of which is generally conical in configuration. The depending conical portion of the element C is indicated, as a whole, by the reference numeral **20**. Depending from the apex of the conical portion **20** is a rigid spindle or shaft **21**.

The propeller element B is rotatably mounted on the shaft **21**, and is held against vertical movement with relation thereto by any usual or conventional means, not shown.

The propeller element B consists substantially of a hub portion **22**, which surrounds the shaft **21**, a plurality of laterally extending blades **23**, **24**, **25**, and **26**, and a rigid ring **27**, which surrounds and is integrally attached to the ends of said propeller blades. As means for rotatably driving the propeller B, the ring **27** is provided with jet propulsion tubes **28**, **29**, **30** and **31**.

As illustrated in Fig. 7, the fuselage is provided with a vertical ram housing **40**, having a vertically movable ram **41** operatively housed therein; said housing **40** is adapted to receive a pressure fluid through a conduit **42**, to forcibly raise the ram **41**. Although not shown in the drawings, there are a plurality of these ram assemblies provided within the fuselage and they are located in radially spaced relation to the aperture **10** of the fuselage. The upper end of each ram **41** is provided with an anchoring plate **43**, by which the ram is rigidly connected to the lower surface of the conical portion **20** of the element C, adjacent the upper portion of said conical surface. Consequently, the element C may be forcibly raised and lowered hydraulically, with relation to the fuselage A, and this may be done in a selective manner by controlling valve, not shown, in the pressure fluid supply line. When the element C is at the lower end of its travel, the propeller B is in position to rotate within the vertical walls **11** of the fuselage. When the element C is raised above the fuselage, as illustrated in Fig. 6, the propeller B lies at the upper end of the aperture **10**. The blades of the propeller B are so arranged that they have a pitch which moves air downwardly through the aperture **10**. It is thought to be apparent that rotation of the propeller B may cause sufficient downward movement of air through the aperture **10** to possibly raise the entire device, if the control element C is in a raised or partly raised position.

The upper surface of the fuselage A is provided with a suitable cabin **45** for housing the control instruments and passengers.

As means for driving the craft in a forward direction, the interior of the fuselage A is provided with two or more conventional jet type engines, not shown, having conventional jet tubes **50** which pass through the covering of the fuselage. In the embodiment illustrated in the accompanying drawings, jet tubes are shown to accommodate two of said jet engines.

As means for controlling the tilt of the fuselage A, when it is airborne, there are provided two or more conventional ailerons which are pivoted on horizontal axes, so that they may be swung upwardly or downwardly with rela-

138 || @HighEarthOrbit_ linktr.ee/Grider2

tion to the rim **13** of the fuselage A. Such swinging movement of the ailerons is illustrated in Figs. 8 to 13 of the accompanying drawings.

A suitable trim tab **60** is also provided on the trailing edge of the fuselage A.

In order for the craft to be impelled vertically, the control element C is raised in the aperture **10** by the plural hydraulic rams **41**, after which, or during the raising process, the propeller is placed in operation. As indicated by the arrows in Fig. 6, the propeller acts to draw air inwardly along the conical wall **12**, and to exhaust such air downwardly through the aperture **10**. Such a flow of air acts to bodily raise the craft, both through a partial vacuum created above the edges of the element C and over the upper edge of the wall **12**, but also by the airscrew effect of the propeller. Since the propeller operates within the vertical annular wall **11**, and is confined by said wall, the air exhausted by the propeller might well be termed as an air rocket.

It may readily be understood, that the air entering the aperture **10** would, under normal circumstances, travel a circular downward path, and the friction of such spinning air would normally have a tendency to cause the fuselage A to rotate. As a means for breaking up this circular or cylonic air travel, there is provided a plurality of rigidly mounted upstanding vanes **70**, **71**, **72** and **73**. These vanes are mounted on the fuselage A in such a manner, that they project upwardly from the conical wall **12** thereof. Air must therefore enter the aperture **10** in a substantially straight lateral path. The depending conical portion **20** of the control element C is plurally slotted vertically so that the vanes **70**, **71**, **72** and **73** may enter the portion **20** when the element C is lowered.

It is thought that the function and manner of operating the ailerons **51** is obvious to anyone versed in the art of aeronautics.

It is pointed out that the accompanying drawings are to a large extent diagrammatic, and much has been omitted in structural detail. Such omitted details present only such problems as are readily solvable by those versed in the present art.

It is contemplated that during supersonic or exceptionally high directional speeds, with the element C closed, the propeller may be rotated in order to provide a gyroscopic influence on the craft.

Obviously the invention is susceptible to some change or alteration without defeating its practicability, and I therefore do not wish to be confined to the preferred embodiment shown in the drawings and described herein, further than I am limited by the scope of the appended claims.

I claim:

1. A heavier than air aircraft, including: a horizontal annular body of rigid construction, having a central vertical through opening; an air control element mounted for vertical movement with relation to said body, said element so positioned that it may open and close said opening; a propeller carried by said control element and adapted to eject air downwardly through said opening; means for driving said propeller; and means for propelling said body through the air in a substantially horizontal path.

2. A heavier than air aircraft, including: a horizontal annular body of rigid construction, having a central vertical through opening; a conically flared wall surrounding the upper end of said opening; a downwardly and outwardly flared substantially conical surface surrounding the upper end of said wall; an air control element mounted on said body for vertical movement into and out of said opening; a depending exteriorly conical portion carried by said element and adapted to rest within said wall; hydraulic means for selectively raising and lowering said element with relation to the body; a propeller rotatably carried by the apex of said conical portion, said propeller rotatable within said opening; means for driving the propeller to rotation; and means for propelling said body through the air in a substantially horizontal path.

3. Structure as described in claim 1, in which said propeller driving means includes: jet propulsion tubes carried by the propeller.

4. Structure as described in claim 1, in which the body propelling means includes: jet propulsion tubes carried by the body.

5. Structure as described in claim 2, in which said propeller driving means includes: jet propulsion tubes carried by the propeller.

6. Structure as described in claim 2, in which the body propelling means includes; jet propulsion tubes carried by the body.

References Cited in the file of this patent

UNITED STATES PATENTS

1,692,397	Wagner	Nov. 20, 1928
1,797,669	Oehmichen	Mar. 24, 1931
2,486,272	Gazda	Oct. 25, 1949
2,567,392	Naught	Sept. 11, 1951

139 || @HighEarthOrbit_ linktr.ee/Grider2

United States Patent [19]

Surbaugh

[11] **3,915,411**

[45] **Oct. 28, 1975**

[54] **DISCOIDAL AIRCRAFT**

[75] Inventor: **Richard M. Surbaugh,** Lake Ozark, Mo.

[73] Assignee: **Paul R. Distler,** Lake Ozark, Mo. ; a part interest

[22] Filed: **July 24, 1974**

[21] Appl. No.: **491,280**

[52] **U.S. Cl.** ..... **244/12 C**

[51] **Int. Cl.**[2] **B64C 29/00**

[58] **Field of Search** ..... 244/12 C, 12 B, 23 C, 87

[56] **References Cited**

UNITED STATES PATENTS

2,120,065	6/1938	DeRouge	244/87
2,927,746	3/1960	Mellen	244/12 C
2,944,762	7/1960	Lane	244/12 C
2,978,206	4/1961	Johnson	244/23 C
3,067,967	12/1962	Barr	244/12 C
3,073,551	1/1963	Bowersox	244/23 C
3,276,723	10/1966	Miller et al.	244/12 C
3,572,613	3/1971	Porter	244/12 C

Primary Examiner—Trygve M. Blix
Assistant Examiner—Barry L. Kelmachter
Attorney, Agent, or Firm—John A. Hamilton

[57] **ABSTRACT**

An aircraft consisting of a large horizontally discoidal airfoil from which the passenger and freight cabin depends, the airfoil being specially designed to function selectively either as a "flying wing" under the impetus of rearwardly directed air impelling propellors, for horizontal flight, or as a discoidal type airfoil for vertical take-off and landing under the impetus of a top central air impellor operable to direct air radially and horizontally outwardly in all directions.

3 Claims, 3 Drawing Figures

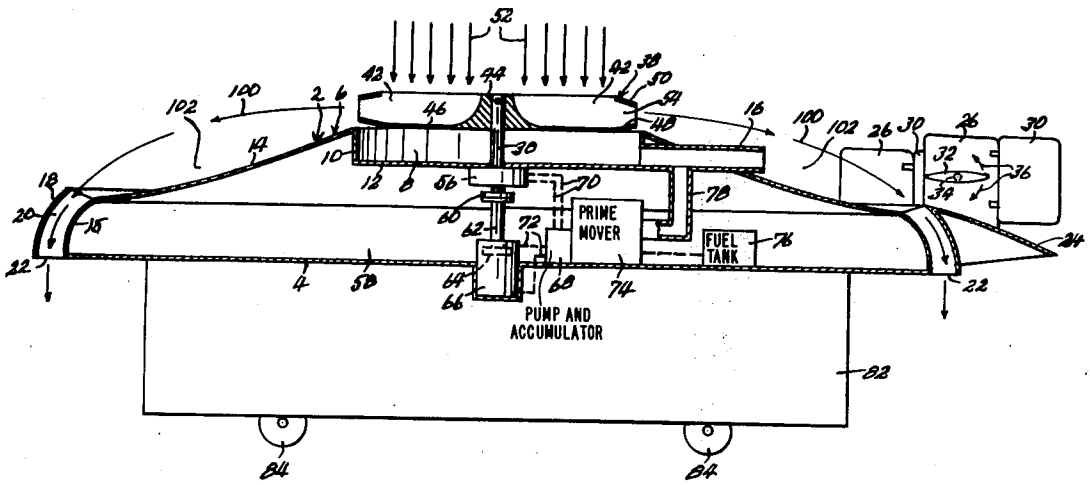

140 || @HighEarthOrbit_ linktr.ee/Grider2

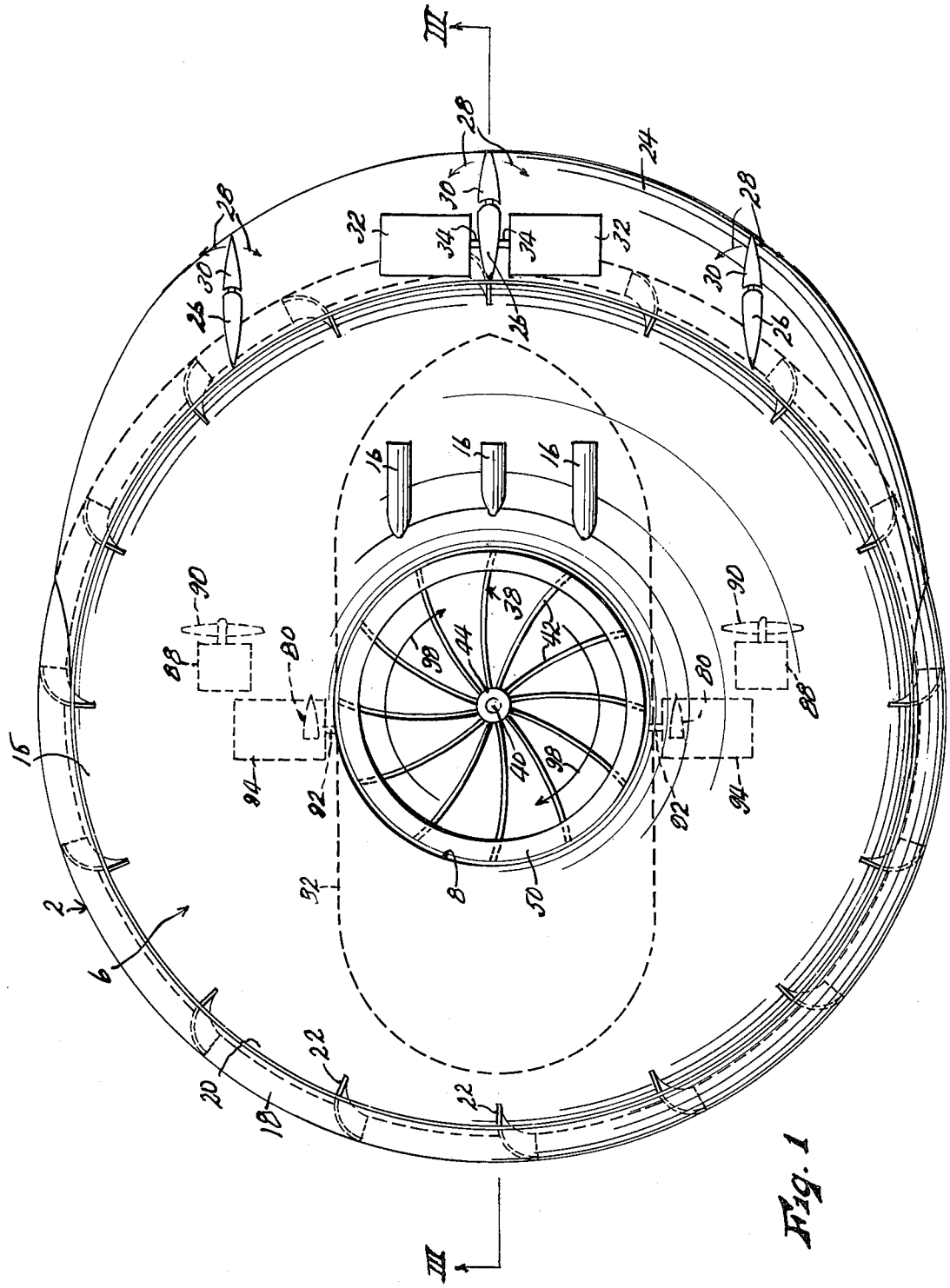

Fig. 1

141 || @HighEarthOrbit_ linktr.ee/Grider2

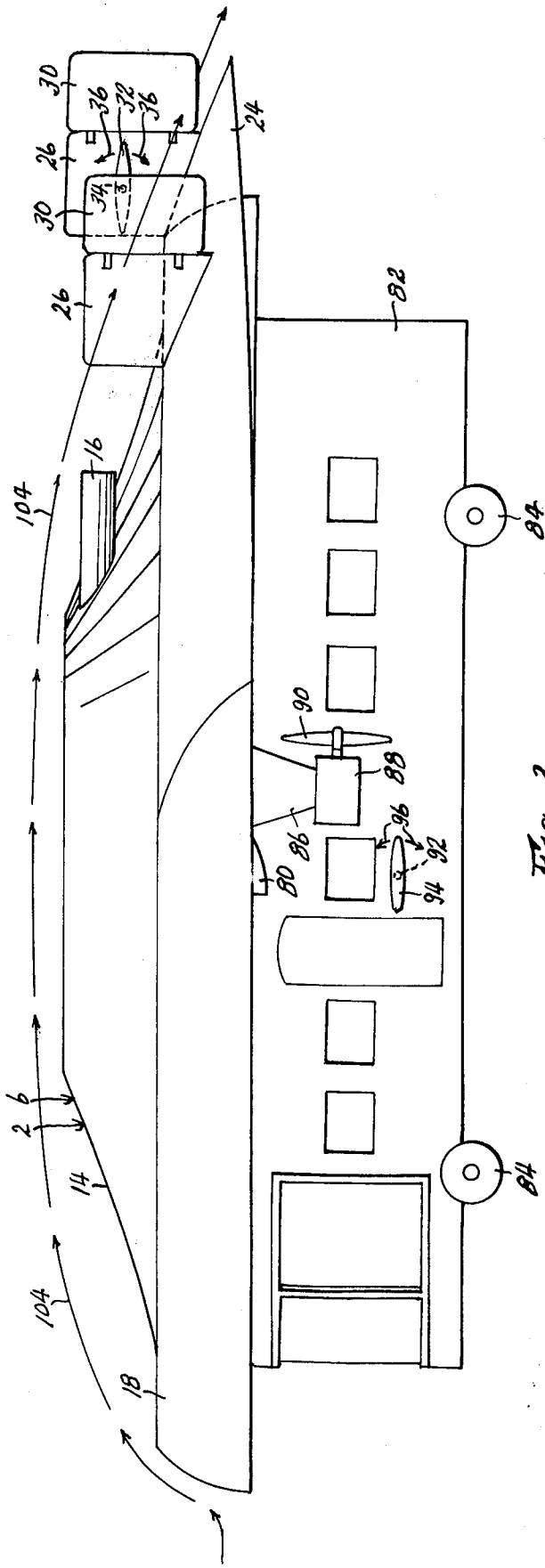

Fig. 2

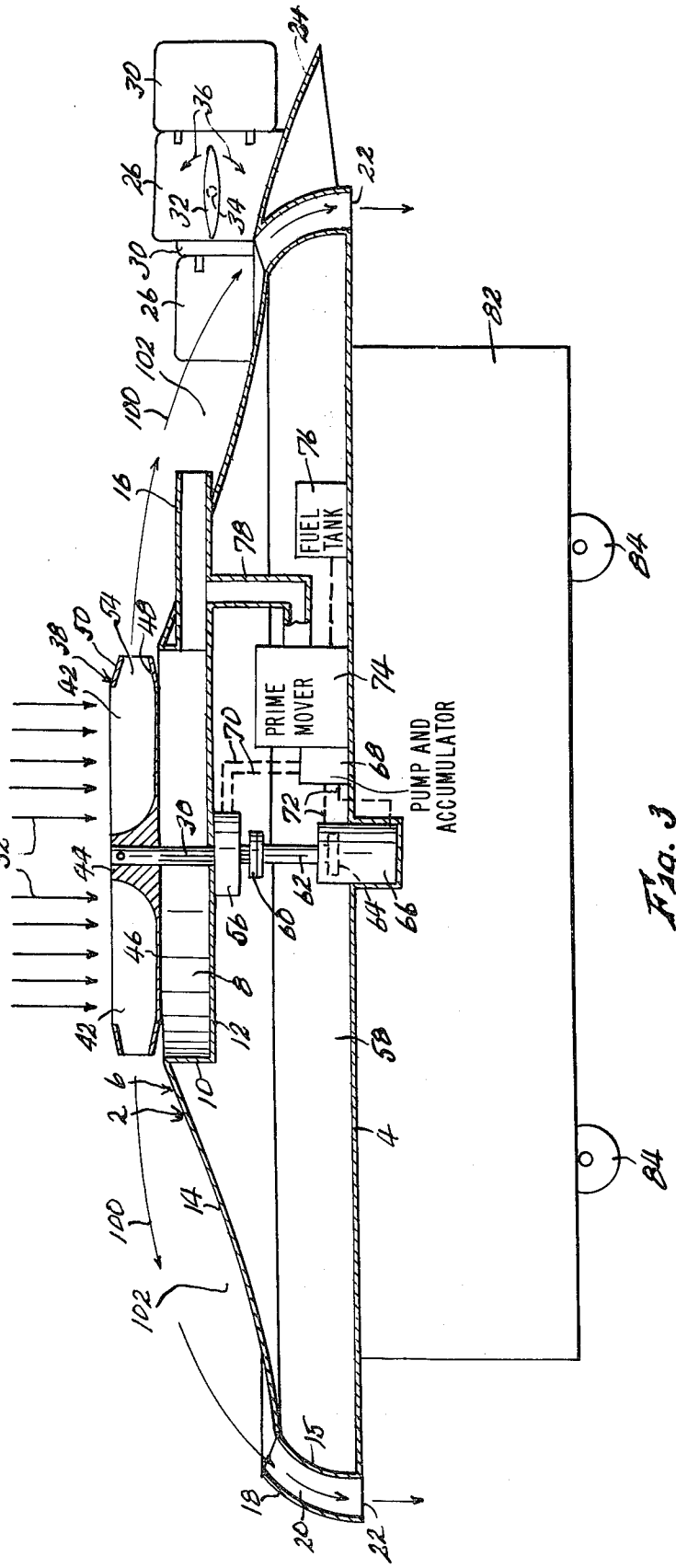

Fig. 3

143 || @HighEarthOrbit_ linktr.ee/Grider2

DISCOIDAL AIRCRAFT

This invention relates to new and useful improvements in aircraft, and has particular reference to vertical take-off and landing aircraft, commonly known as VTOL craft.

VTOL aircraft of a certain type, commonly known as "discoidal," and consisting of a large, horizontally circular airfoil with an air impellor disposed centrally thereabove and operable to direct air radially and horizontally outwardly in all directions above the top surface of the airfoil to create a vertical lift, have been previously proposed. However, while such an arrangement does provide vertical take-off and landing, it is rather ineffective and inefficient in providing good horizontal flight characteristics once the craft is in the air. The circular airfoil and top air impellor are of course not designed primarily for horizontal flight, but for maximum lifting power, with horizontal travel being supplied by, in some manner, directionalizing the air flow from the top air impellor to produce a horizontal component greater in one direction than in any other. For example, the air flow from the top air impellor may be restricted to a predominantly rearward direction, to drive the craft forwardly, or the entire craft may be tilted, so that the lift on the craft provided by the flow of air over the airfoil is given a horizontal component in any desired horizontal direction, in the manner of a helicopter. Both of these methods, and all others within my knowledge, impair the lift force provided by the top air impellor to support the craft vertically, so that still greater power is required to support the craft at a given altitude in horizontal flight, and make only inefficient usage of the impellor power in providing horizontal flight. Thus craft of this type have generally slow, poor flight characteristics when moving horizontally. No plane of this general type within my knowledge develops sufficient horizontal speed to support itself in the air in the manner of the usual straight-wing airplane, that is, in which the circular airfoil provides sufficient lift, solely by its forward travel through the air, and without the lift provided by the top impellor, to support the craft in the air.

Accordingly, the primary object of the present invention is the provision of an aircraft generally of the discoidal type as discussed above, but which nevertheless possesses good horizontal flight characteristics. Essentially, this object is accomplished by the provision of a generally discoidal airfoil equipped with a top air impellor as before, but which is specially designed and equipped to function in the manner of a straight wing in horizontal flight at or above a certain horizontal speed, and by the addition of rearwardly directed air impellor means operable to power the craft in horizontal flight at speeds at and above that rate. The top impellor may be retracted within the airfoil so that it does not impair the air-flow pattern of the airfoil in its function as a straight wing. Both the top and rearward impellors may be used conjointly to lift and drive the craft horizontally at horizontal speeds less than that required for the airfoil to function solely in its straight-wing capacity.

Another object is the provision of an aircraft of the character described in which the top surface of the airfoil is specially designed to provide a greater lifting force over a greater proportion of its total area than has heretofore been obtainable.

A further object is the provision of an aircraft of the character described with the addition of an auxiliary airfoil of annular form extending around the periphery of the discoidal airfoil and operable still further to increase the lifting force provided by said airfoil.

A still further object is the provision of an aircraft of the character described having a single set of flight attitude controls, such as rudders and ailerons which function effectively in the air stream created either by the top air impellor, or by forward horizontal movement of the airfoil.

Still another object is the provision of an aircraft of the character described wherein the direction of air intake into the top air impellor, and the direction in which the air is eventually discharged from the airfoil, are downward, whereby to assist in providing lifting force.

Other objects are general simplicity and economy of design, and efficiency and dependability of operation.

With these objects in view, as well as other objects which will appear in the course of the specification, reference will be had to the accompanying partially schematic drawing, wherein:

FIG. **1** is a top plan view of a discoidal aircraft embodying the present invention,

FIG. **2** is a side elevational view of the aircraft, and

FIG. **3** is a sectional view taken on line III—III of FIG. **1.**

Like reference numerals apply to similar parts throughout the several views, and the numeral **2** applies generally to the main airfoil of the aircraft. Said airfoil is generally circular or discoidal in a horizontal plan. Its lower wall **4** is circular and may be generally planar as indicated. Its upper wall **6** is provided with a depressed central well **8** which is cylindrical about a vertical axis, having a cylindrical peripheral wall **10** and a horizontal floor **12** and opening upwardly. Outwardly from well **8,** top wall **6** is formed generally as a concave frustum of a cone **14,** sloping downwardly and outwardly in a curve so as to be upwardly concave. The extreme peripheral portion **15** of said top wall is curved oppositely to portion **14,** sloping downwardly and outwardly in an upwardly convex curvature to mate at its extreme lower edge with the peripheral edge of bottom wall **4,** to which it is affixed. Interconnected into cylindrical wall **10** of well **8** are a number, three as shown, of rearwardly extending horizontal jet pipes **16,** which extend rearwardly from said well through the conical wall **14** of the airfoil and are open at their rearward ends.

Also forming a part of the main airfoil thus far described is an auxiliary airfoil **18** which is annular in form and concentric with the main airfoil, but of somewhat larger diameter than the main airfoil. It is formed of sheet metal, and in cross-sectional contour is spaced outwardly and upwardly from portion **15** of the main airfoil, being curved generally equally therewith but spaced outwardly therefrom to form an annular air passage **20** therebetween. Airfoil **18** is permanently affixed to portion **15** of the main airfoil by a series of angularly spaced apart web members **22** extending radially therebetween and affixed thereto.

A generally crescent shaped tail member **24,** also formed of sheet metal, is affixed along its inward edge to the upper edge of auxiliary airfoil **18** around the rearward portion thereof. Said tail member curves outwardly and downwardly above airfoil **18,** being upwardly convex in the same manner as said airfoil but of lesser slope. It extends well rearwardly from airfoil **18,**

144 || @HighEarthOrbit_ linktr.ee/Grider2

and at its forward ends merges smoothly into the contour of said airfoil, as shown.

Affixed to and extending upwardly from tail member **24** are a number of vertical flight stabilizers **26,** said stabilizers being generally planar with their planes parallel to the line of forward horizontal travel of the craft. Pivoted to the rearward edge of each stabilizer **26,** for lateral movement as indicated by arrows **28** in FIG. **1,** is a generally planar, vertical rudder **30.** Said rudders may be operated by the pilot of the craft by standard means well known in the art, and not shown here. As shown, one vertical stabilizer and corresponding rudder may be disposed at the longitudinal centerline of the craft, with auxiliary stabilizer-rudder units spaced at respectively opposite sides thereof. Carried by the central stabilizer **26,** at respectively opposite sides thereof, are a pair of elevator-ailerons **32.** Each of members **32** is mounted on a shaft **34** which projects horizontally and laterally from central stabilizer **26,** and is generally planar with its plane disposed normally horizontal, but may be tilted vertically, as indicated by arrows **36** in FIGS. **2** and **3,** by turning shafts **34.** Preferably for reasons which will presently appear, the two elevator-ailerons are independently operable, also by standard means controlled by the pilot, so that they can be turned either simultaneously in the same direction, or simultaneously in opposite directions. The former is an elevator action, and the latter an aileron action, as will appear.

Mounted within well **8** of the main airfoil is a top air impellor wheel **38.** Said impellor wheel is fixed centrally on a vertical shaft **40** disposed concentrically of well **8,** and includes curved radial blades **42** extending from a hub **44** fixed on the shaft. The wheel is generally horizontally planar and is provided with a floor **46** beneath blades **42** and secured thereto along their entire lengths, being provided with an upturned angular lip **48** at its peripheral edge. An annular air-directing ring **50** is affixed to the upper edges of blades **42** at their outer ends, and in cross-sectional contour is inclined downwardly toward the wheel periphery. When the impellor wheel is rotated by turning shaft **40,** air is drawn downwardly thereinto, as indicated by arrows **52** in FIG. **3,** and directed horizontally and radially outwardly in all directions through the peripheral throat **54** provided by lip **48** and ring **50,** so long as said wheel projects above well **8.**

Shaft **30** of the impellor wheel projects downwardly through floor **12** of well **8,** being rotatably driven by a hydraulic turbine **56** or the like mounted in the chamber **58** between upper and lower walls **6** and **4** of the main airfoil. Said shaft is splined for vertical movement through said turbine, and is connected at its lower end by a thrust bearing **60** to the upper end of a non-rotating piston rod **62** having at its lower end a piston **64** operable in a vertical cylinder **66** mounted in lower airfoil wall **4.** Thus piston rod **62** does not rotate, but can function to elevate impellor wheel **38** above well **8,** as shown in FIG. **3,** or to retract it within said well, as indicated in FIG. **2.** Turbine **56** is operated by fluid delivered thereto by a hydraulic pump and accumulator indicated at **68** through an operative connection **70** therebetween, it being understood that said connection includes standard controls, not shown, whereby impellor wheel **38** may be started, stopped or its speed varied. Cylinder **66** and piston **64** is operated by fluid delivered thereto by pump and accumulator **68** through an operative connection **72,** which will be understood to include standard controls, not shown, which permit impellor wheel **38** to be extended completely above well **8** as in FIG. **3,** retracted completely within said well, or set at any intermediate position. The pump **68** is driven by a suitable prime mover **74** mounted in chamber **58,** such as an internal combustion engine powered by fuel from a fuel tank **76.** The exhaust **78** of said engine is connected into one of jet pipes **16,** while an air supply to the engine is provided by a pair of air scoops **80** opening through the lower wall **4** of the airfoil.

The aircraft cabin **82,** for the pilot, passengers and freight, is affixed centrally to the lower wall **4** of the main airfoil, and depends therefrom. It is shown only schematically, particularly in FIG. **3,** and is provided at its bottom with ground-engaging wheels **84** for supporting the craft when it is on the ground. Air scoops **80** are disposed at respectively opposite sides of the cabin. Also mounted at respectively opposite sides of the cabin, by means of struts **86** depending from lower airfoil wall **4,** are pair of engines **88** of any suitable type, each operable to drive a propellor **90** positioned to drive air horizontally to the rear. The operation and control system for engines **88** may be standard, and are not shown. Also mounted at each side of cabin **82,** on a shaft **92** extending horizontally and laterally from said cabin, is an aileron **94** which is generally planar in a normally horizontal plane, but which may be tilted as indicated by arrows **96** in FIG. **2** by turning shafts **92.** It will be understood that said ailerons pivot in respectively opposite directions by pilot-controlled means, not shown.

In operation, to accomplish a vertical take-off, air impellor wheel **38** is extended above well **8** as shown in FIG. **2** by operation of hydraulic cylinder **66,** and turbine **56** set in operation as driven by engine **74** to rotate said wheel, as indicated by arrows **92** in FIG. **1.** Air is thus drawn downwardly into the impellor wheel, as indicated by arrows **52** in FIG. **3,** and expelled radially outwardly through throat **54** of said wheel at a high speed, as indicated by arrows **100.** As said air moves outwardly over concave conical portion **14** of the airfoil, it creates a zone **102** of reduced air pressure, or a partial vacuum, between surface **14** and the normal horizontal plane of the ejected air, which both pulls the air downwardly in a generally curving path as shown, and also exerts a corresponding lifting force on the aircraft. The concave curvature of surface **14,** rather than the convex curvature more common in craft of this general type, provides a more rapid separation between itself and the main air flow, and hence is conducive to the more efficient production of a higher degree of vacuum, and hence provides a greater lifting force per unit of area of surface **14.** This is particularly true in the portion of area **14** close to impellor wheel **38,** since if as is more common this surface were convex and substantially horizontal immediately adjacent the impellor, the air would follow it outwardly for a substantial radial distance before being caused by centrifugal force to leave said surface to create a vacuum therebetween. At the outer edge of airfoil surface **14,** at least a portion of the air will enter into the air passage **20** between auxiliary annular airfoil **18** and portion **15** of the main airfoil, and be expelled downwardly therefrom as indicated. The air-flow through this passage creates a reduced air pressure at the outer surface of portion **15,**

145 || @HighEarthOrbit_ linktr.ee/Grider2

an increased pressure at the inner surface of airfoil **18,** and a reduced pressure at the outer surface of airfoil **18.** All of these pressure differentials create further lifting force on the aircraft, so that airfoil **18** serves a a valuable adjunct to the main airfoil **2.** Also, the downward ejection of air from passage **20,** and the downward suction of air into the impellor wheel, both result in upward forces on the craft. Thus the lifting force, reflected by correspondingly greater upward air pressure against bottom wall **4** of the main airfoil, increases with the speed and air delivery rate of impellor wheel **38,** and when this lifting force equals and exceeds the weight of the craft, said craft will rise vertically from the ground.

During vertical movement of the craft, its attitude in the air is controlled by elevator-ailerons **32** as acted on by air directed rearwardly by the impellor wheel, not all of which of course enters passageway **20** of the auxiliary airfoil. That is, members **32** may be caused to pivot simultaneously in the same direction to act as elevators to control the front-to-rear "yawing" of the craft, and may be caused to pivot simultaneously in opposite directions to act as ailerons to produce and control lateral rolling of the craft. Ailerons **94** are substantially inoperative at this time, since they may have little or no horizontal air currents acting thereagainst, and since propellar engines **88** are either not operating or operating only slowly at this time. The heading of the plane is controlled by rudders **30.** Also, during operation of the top impellor, there are reactive forces tending to rotate the craft in a direction opposite to the rotation of the impellor. This may be controlled by rudders **30,** or, to provide a built-in correction, the webs **22** between the main and auxiliary airfoils may be curved horizontally, as indicated in FIG. **1,** whereby the flow of air through passage **20** acts on said webs to exert a horizontally rotative force on the craft. As shown, some of said webs may be curved in one direction and some in the other, the proportion curved in each direction being selected to provide a generally equal balance of rotative and counter-rotative forces on the craft.

When the craft has risen vertically to the required or desired altitude, propellor engines **88** are started, or speeded, to cause propellors **90** to drive the plane horizontally forwardly through the air. This forward motion of the craft creates an air flow over the top of the craft as indicated by arrows **104** in FIG. **2,** the forward portion of auxiliary airfoil **18** deflecting air upwardly and rearwardly over the top of the main airfoil, creating a zone of reduced air pressure above the airfoil, and a correspondingly higher pressure below the airfoil. The airfoil is then functioning in the manner of a straight wing, and will provide sufficient lift force to support the craft when a sufficiently high forward speed has been reached. Before this speed has been reached, and the straight-wing effect is therefore still not providing adequate lift force, impellor wheel **38** must be continued in operation to provide a supplemental lift force. At the same time, the upward projection of the impellor wheel above the airfoil, as shown in FIG. **3** and as required for vertical take-offs and landings, would cause said wheel to obstruct and interfere with the air flow pattern shown in FIG. **2.** Therefore, as the forward horizontal speed of the craft is gradually increased, and the requirement for the lifting effect of the impellor is correspondingly gradually decreased, said impellor is gradually retracted into well **8** of the airfoil until, when the craft is moving at a sufficiently high horizontal speed to be supported solely by the straight-wing action of the airfoil, said impellor may be retracted completely into the well and its operation terminated. At positions of partial retraction, air expelled into the well by the impellor is vented through jet pipes **16,** so as to provide an additional forward thrust, During horizontal flight, cabin ailerons **94** are fully operative, and tail elevator-ailerons **32** may be used solely as elevators. The rearward extension of rudders **30,** stabilizers **26** and elevator-ailerons **32** provided by tail section **24** is useful in providing good stability in horizontal flight.

Vertical landings are accomplished by essentially reversing the described process, that is, by gradually reducing forward speed while driving and gradually extending impellor **38** from well **8** until the craft is hovering in a substantially stationary position, then reducing the impellor speed to allow the craft to settle gradually to the ground.

While I have shown and described a specific embodiment of my invention, it will be readily apparent that many minor changes of structure and operation could be made without departing from the spirit of the invention.

What I claim as new and desire to protect by Letters Patent is:

1. An aircraft comprising:

a. a horizontally discoidal airfoil having a top surface and a bottom surface, and being provided with a central, upwardly opening well formed in the top surface thereof,

b. a first air impellor disposed centrally of said airfoil, being carried thereby, and operable when driven to direct air horizontally and radially outwardly in all directions, said well being capable of receiving said first air impellor downwardly therein,

c. adjusting means carried by said airfoil and operable to move said first air impellor selectively to positions either completely above said well, or completely retracted within said well, or to any intermediate position, said first impellor being operable when extended above said well to direct air horizontally and radially outwardly over the top surface of said airfoil, the top surface of said airfoil sloping downwardly and outwardly from the periphery of said well to the outer edg of said airfoil,

d. means carried by said craft and operable to drive said first impellor,

e. a cabin affixed to and depending from the bottom of said airfoil,

f. control members carried by said airfoil and disposed in the path of air currents expelled from said first impellor, said control members being movable relative to said air currents to control the flight attitude of said craft, and

g. a second air impellor carried by said airfoil and operable to direct air horizontally in one direction only, whereby to propel said craft horizontally forwardly through the air, said first and second air impellors being independently controlled.

2. An aircraft as recited in claim **1** with the addition of rearwardly directed jet pipes interconnected into said well and opening rearwardly to the atmosphere, whereby air expelled into said well by said first impellor, when said impellor is retracted within said well, is vented through said jet pipes to provide a forward thrust force on said craft.

146 || @HighEarthOrbit_ linktr.ee/Grider2

3. An aircraft as recited in claim **1** wherein said control members include:

a. a tail member affixed to and extending rearwardly from said airfoil,

b. at least one generally planar vertical stabilizer affixed to and rising from said tail member in the path of air expelled by said first impellor when said first impellor is extended above said well, with its plane extending forwardly and rearwardly relative to said craft,

c. a generally planar, vertical rudder pivoted to the rearward edge of said vertical stabilizer and operable to be pivoted horizontally and laterally, and

d. a pair of normally horizontal generally planar elevator-ailerons carried for pivotal movement by said vertical stabilizer about a horizontal transverse axis, and being disposed at respectively opposite sides of the midline of the craft, said elevator-ailerons being independently operable for pivotal movement selectively in the same direction and in opposite directions.

* * * * *

147 || @HighEarthOrbit_linktree/Grider2

US 20110262275A1

(19) United States

(12) Patent Application Publication

(10) Pub. No.: US 2011/0262275 A1

(43) Pub. Date: Oct. 27, 2011

Kovalchuk et al.

(54) **METHOD FOR PRODUCING THRUST (EMBODIMENTS) AND APPARATUS FOR TRAVEL IN A FLUID MEDIUM**

(76) Inventors: **Valeriy Adamovich Kovalchuk**, Chelyabinsk (RU); **Sergey Adamovich Xovalchuk**, Chelyabinsk (RU); **Roman Petrovich Bodrov**, Chelyabinsk (RU)

(21) Appl. No.: **13/060,431**

(22) PCT Filed: **Aug. 25, 2009**

(86) PCT No.: **PCT/RU2009/000426**

§ 371 (c)(1), (2), (4) Date: **Jul. 11, 2011**

(30) **Foreign Application Priority Data**

Aug. 25, 2008 (RU) 2008134763

Publication Classification

(51) **Int. Cl.**
B64C 21/00 (2006.01)
B63H 11/00 (2006.01)

(52) **U.S. Cl.** ..... **416/20 R**

(57) **ABSTRACT**

The subject of the patent is a group of inventions relating to an apparatus for movement in air and water. The apparatus for movement in fluid comprises an aerodynamic cross-section wing with a convex upper surface, and a source of high pressure fluid interconnected with a means for forming pressure jets over the convex upper surface of the wing. Six embodiments of the apparatus are characterized by the design of the means for forming pressure jets. The method for developing thrust consists of using the means for forming pressure jets over the convex upper surface of the wing. Five embodiments of the method are characterized by the design of the means for forming pressure jets. The group of inventions is aimed to increase efficiency.

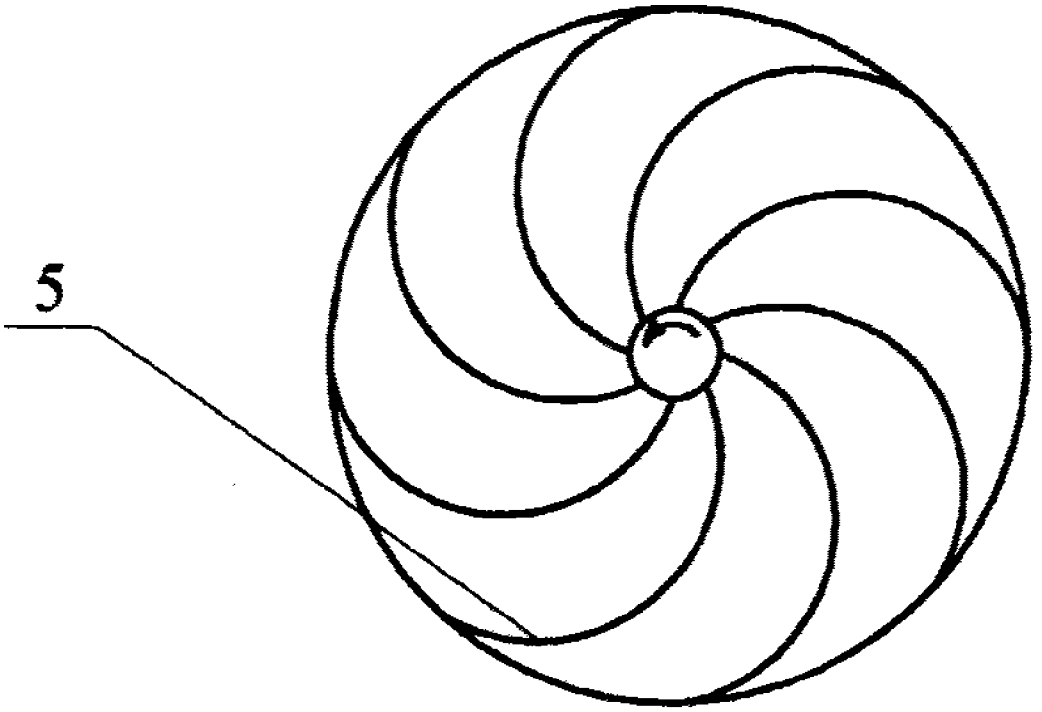

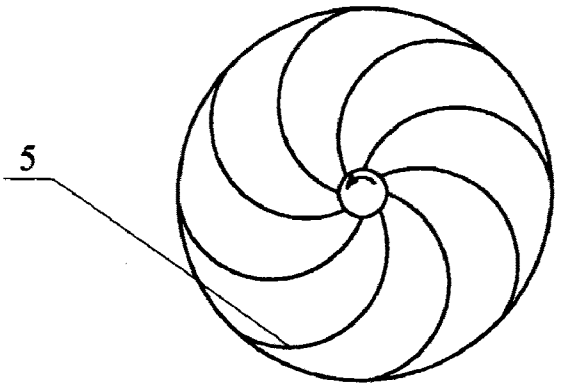

FIGURE 1

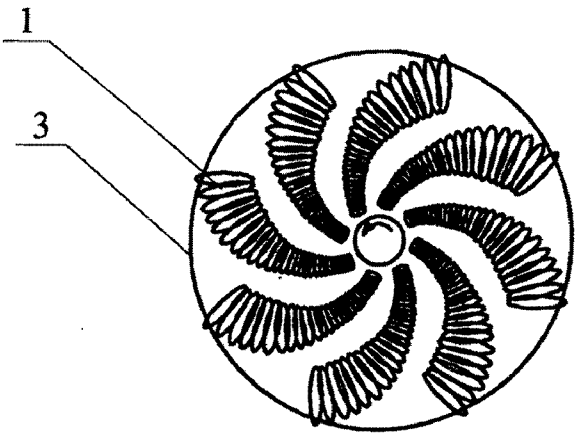

FIGURE 2

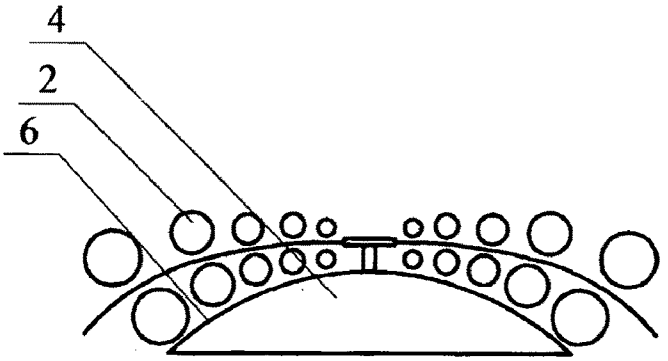

FIGURE 3

149 || @HighEarthOrbit_ linktr.ee/Grider2

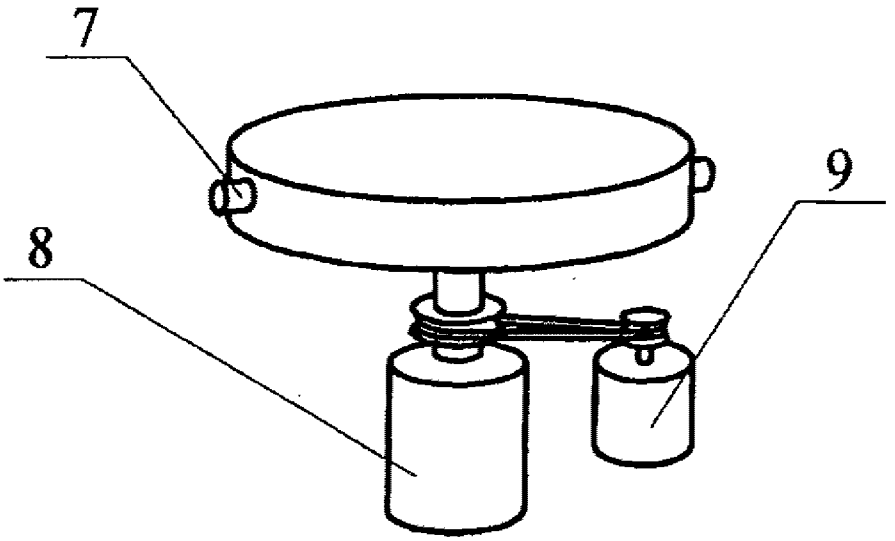

FIGURE 4

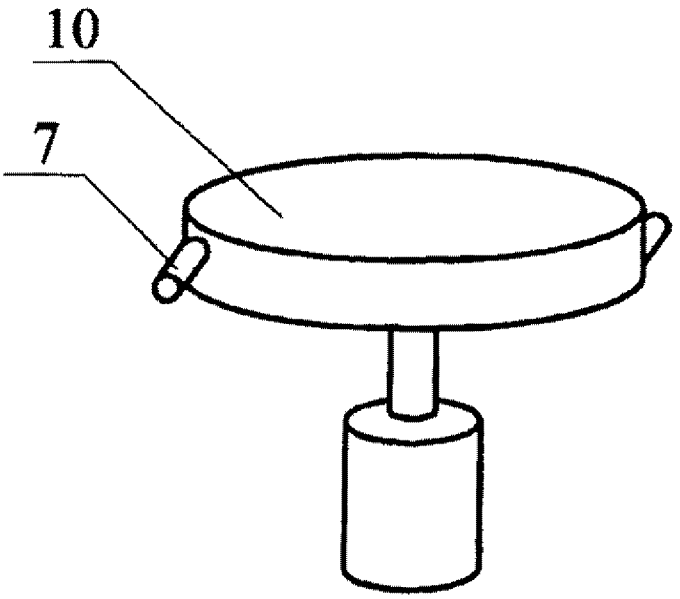

FIGURE 5

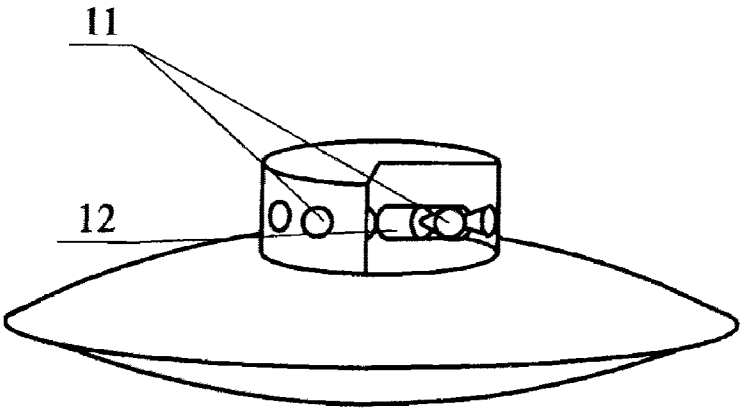

FIGURE 6

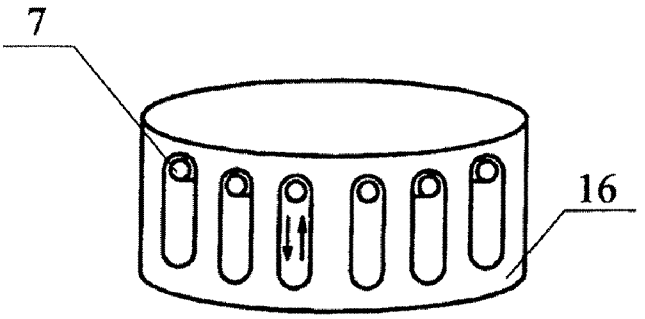

FIGURE 7

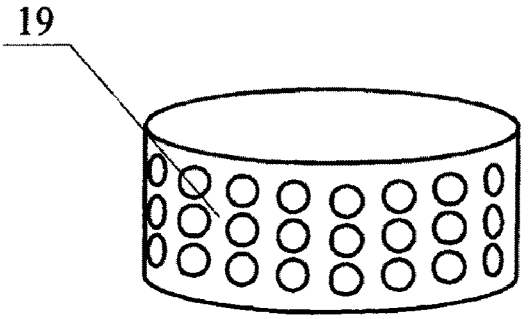

FIGURE 8

151 || @HighEarthOrbit_ linktr.ee/Grider2

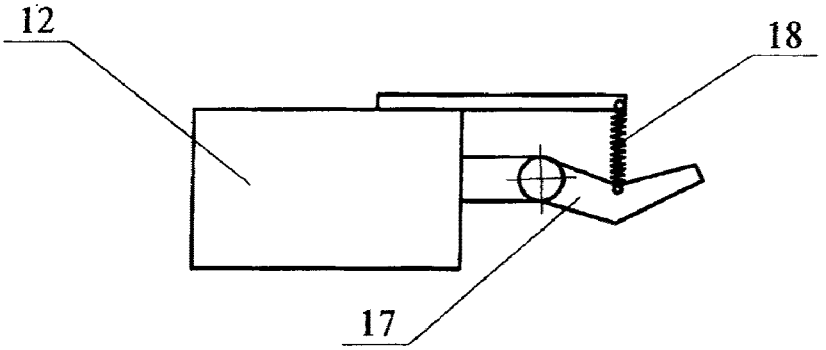

FIGURE 9

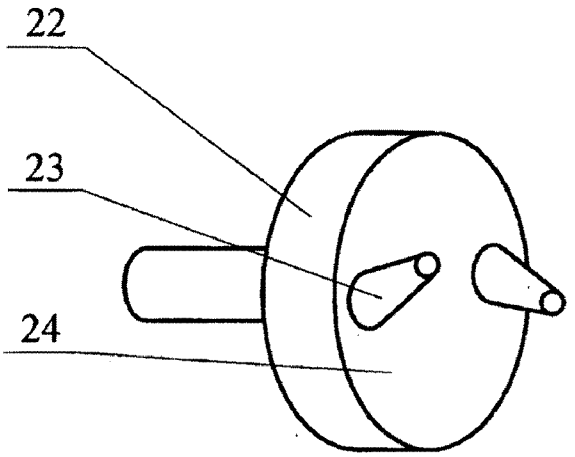

FIGURE 10

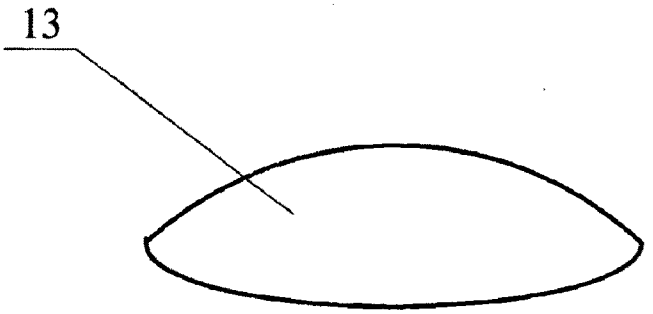

FIGURE 11

152 || @HighEarthOrbit_ linktr.ee/Grider2

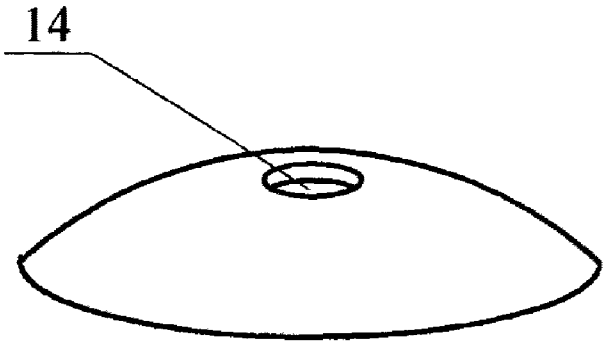

FIGURE 12

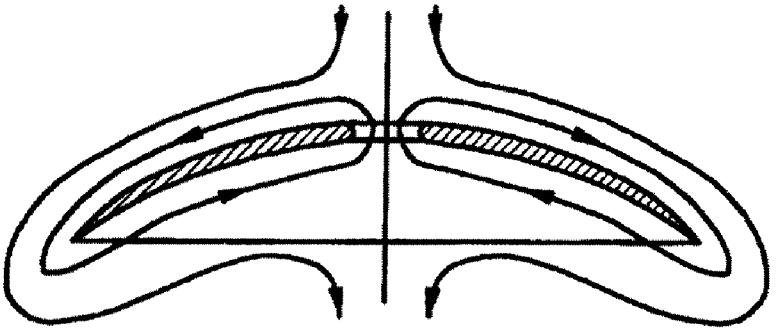

FIGURE 13

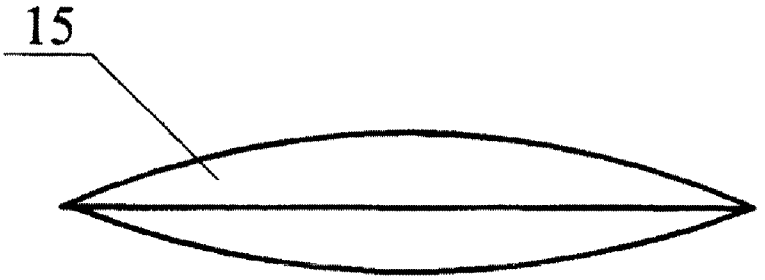

FIGURE 14

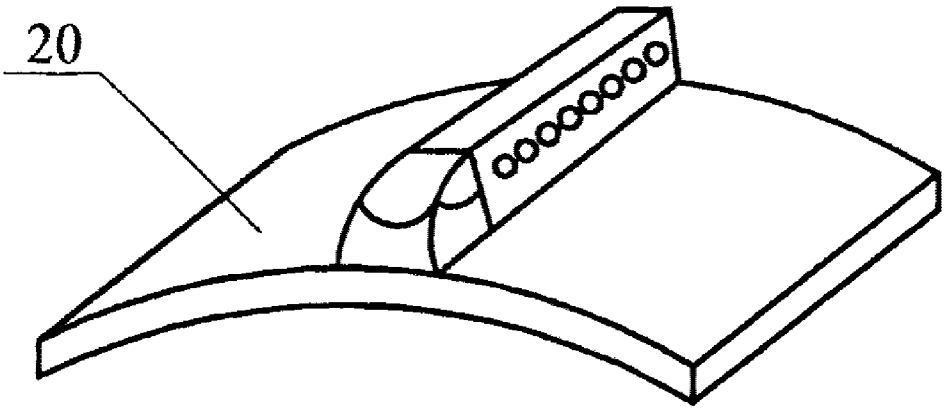

FIGURE 15

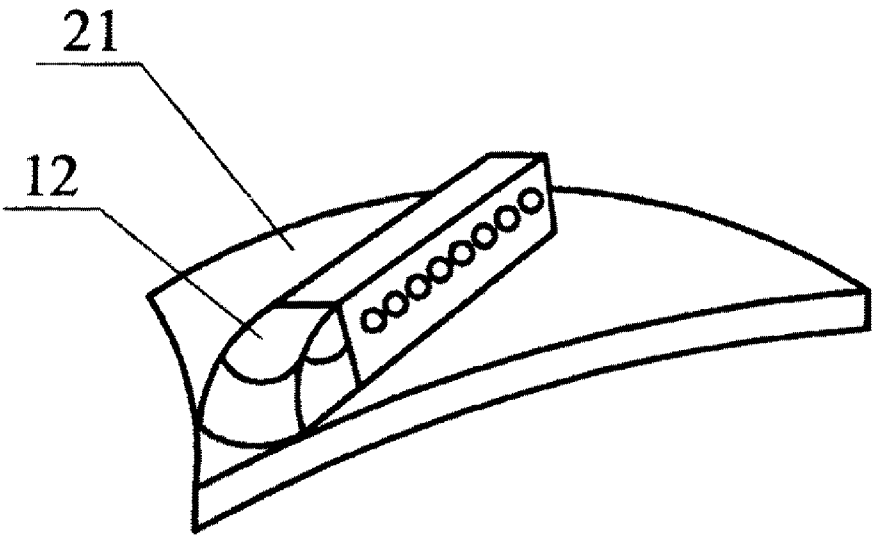

FIGURE 16

US 2011/0262275 A1 Oct. 27, 2011
1

METHOD FOR PRODUCING THRUST (EMBODIMENTS) AND APPARATUS FOR TRAVEL IN A FLUID MEDIUM

CROSS-REFERENCE TO RELATED APPLICATION

[0001] This application claims the benefit of the priority filing date in PCT/RU2009/000426 referenced in WIPO Publication WO2010/024726. The earliest priority date claimed is Aug. 25, 2008.

FEDERALLY SPONSORED RESEARCH

[0002] None

SEQUENCE LISTING OR PROGRAM

[0003] None

STATEMENT REGARDING COPYRIGHTED MATERIAL

[0004] Portions of the disclosure of this patent document contain material that is subject to copyright protection. The copyright owner has no objection to the facsimile reproduction by anyone of the patent document or the patent disclosure as it appears in the Patent and Trademark Office file or records, but otherwise reserves all copyright rights whatsoever.

BACKGROUND

[0005] The invention relates to the field of transportation technology, namely to methods for developing thrust and an apparatus with an aerodynamic cross-section wing, which can be used for movement in fluid, air and water.

[0006] Currently, the following types of propulsion devices are used for developing thrust in gas (air) and liquid (water) media:

- **[0007]** vessels with average density lower than the density of the environment, e.g., airships, balloons, and submarine vessels. Such propulsion devices can only develop vertical thrust (according to the Archimedes law);
- **[0008]** jet engines based on exhaust of stored working medium or on intake, acceleration and subsequent exhaust of the environmental material (according to the Newton law);
- **[0009]** fans (marine propellers) based on the interaction of an inclined plane and the environment during their relative motion;
- **[0010]** aircraft wings (helicopter rotors) based on the effect of reducing pressure in a medium when the speed of medium movement determined by the wing geometry increases. To achieve reduced pressure under an aircraft wing or a helicopter rotor, it is necessary to make an aircraft or a helicopter move relative to air (lift can also be generated by wind, but this would not be a controlled flight).

[0011] The closest analogue (prototype) is a method for developing thrust and a vertical takeoff and landing aircraft (a flying saucer) per RF patent No. 2151717 of 03.02.1998 published 06.27.2000. This method for developing thrust is characterized by the direction of pressure jets of fluid (air flow) over (along a tangent) the upper convex surface of an aerodynamic cross-section wing (disk) for intensive airflow over the disk's upper surface.

[0012] The method for developing thrust used in the invention (the Coanda effect) is characterized by the fact that uniform air flow is created along the tangent to an aerodynamic cross-section wing (a disk with a spherical upper surface), and blowing over the wing's upper surface. According to the Bernoulli law, a rarefied space is created and vertical upward thrust is developed. Herein, a high pressure fan is installed above the wing's upper surface. The fan comprises two centrifugal rotors mirroring each other and rotating coaxially in opposite directions. In addition, the fan has a diffuser in the form of an annular choke with a helical channel for changing the thrust vector and turning it on in the mode of translational motion of the plate. Because weight gain caused by the suction effect is insignificant, the method and apparatus have low efficiency of developing thrust.

[0013] The technical objective of the claimed solutions is to increase the efficiency of developing thrust.

[0014] The stated objective is achieved by a group of inventions united by a common inventive concept. The group comprises:

- **[0015]** a method for developing thrust consisting in directing pressure jets of fluid from nozzles along a tangent to the convex upper surface of an aerodynamic cross-section wing, wherein, according to the invention, the nozzles are moved at an angle in the direction of the pressure jets of fluid that capture surrounding fluid by means of vortices;
- **[0016]** an apparatus for movement in fluid comprising an aerodynamic cross-section wing with a convex upper surface and a source of high pressure fluid interconnected with a means for forming pressure jets from nozzles directed along a tangent to the convex upper surface of the wing, wherein, according to the invention, it has a drive for rotating the nozzles of said means, the means is made in the form of a hollow axle rotor coaxial with the wing's longitudinal axis, capable of forming pressure jets with vortices;
- **[0017]** a method for developing thrust that consists in directing pressure jets of fluid from nozzles along a tangent to the convex upper surface of an aerodynamic cross-section wing, wherein, according to the invention, the points of exhaust of pressure jets of the fluid that capture surrounding fluid by means of vortices are changed sequentially;
- **[0018]** an apparatus for movement in fluid comprising an aerodynamic cross-section wing with a convex upper surface and a source of high pressure fluid interconnected with a means for forming pressure jets from nozzles directed along a tangent to the convex upper surface of the wing, wherein, according to the invention, said means is made in the form of a bank of stationary nozzles that are connected to a pulsating air breathing engine and which simulate circular movement of the nozzles and capable of forming pressure jets with vortices;
- **[0019]** a method for developing thrust that consists in directing pressure jets of fluid from nozzles over the convex upper surface of an aerodynamic cross-section wing, wherein, according to the invention, the nozzles are set to reciprocating movement in the wing's longi-

155 || @HighEarthOrbit_ linktr.ee/Grider2

tudinal axis plane so that the pressure jets of fluid capture surrounding fluid by means of vortices;

[0020] an apparatus for movement in fluid comprising an aerodynamic cross-section wing with a convex upper surface and a source of high pressure fluid interconnected with a means for forming pressure jets directed along a tangent to the convex upper surface of the wing, wherein, according to the invention, the means for forming pressure jets is made in the form of a bank with a hollow axle and nozzles that are installed in the wing's longitudinal axis plane, with the nozzles being capable of forming pressure jets with vortices and connected to a reciprocating motion mechanism;

[0021] an apparatus for movement in fluid comprising an aerodynamic cross-section wing with a convex upper surface and a means for forming pressure jets over the convex upper surface of the wing, wherein, according to the invention, the means for forming pressure jets is made in the form of hinge-mounted curved nozzles connected to a pulsating air breathing engine, capable of forming pressure jets with vortices and resetting by means of springs;

[0022] a method for developing thrust that consists in directing pressure jets of fluid over the convex upper surface of an aerodynamic cross-section wing, wherein, according to the invention, the point of reciprocating exhaust from nozzles of pressure jets of fluid that capture surrounding fluid by means of vortices is simulated in the wing's longitudinal axis plane;

[0023] an apparatus for movement in fluid comprising an aerodynamic cross-section wing with a convex upper surface and a means with nozzles for forming pressure jets over the convex upper surface of the wing, wherein, according to the invention, the means for forming pressure jets is made in the form of a bank of stationary nozzles installed in the wing's longitudinal axis plane and connected to a pulsating air breathing engine capable of reciprocating change in the point of exhaust from the nozzles of pressure jets of fluid that capture surrounding fluid by means of vortices;

[0024] a method for developing thrust that consists in directing pressure jets of fluid from nozzles over the convex upper surface of an aerodynamic cross-section wing, wherein, according to the invention, the nozzles of pressure jets of fluid are set to oscillating movement in the plane parallel to the longitudinal axis of said wing so that the pressure jets of fluid capture surrounding fluid by means of vortices;

[0025] an apparatus for movement in fluid comprising an aerodynamic cross-section wing with a convex upper surface and a means for forming pressure jets and directing them over the convex upper surface of the wing, wherein, according to the invention, the means for forming pressure jets is made in the form of a rotor that is installed perpendicularly to the wing's longitudinal axis and has a hollow axle and nozzles installed symmetrically on the axle end face at an angle to the end face, with the pressure jets being capable of capturing surrounding fluid by means of vortices.

[0026] The invention is based on the phenomenon, discovered by the author V. A. Kovalchuk, of reduction of pressure in the area of movement of jets that form when the jet source moves at an angle in the direction of the jet. The author has called such jet exhaust a "spread jet" (FIG. **1**). A "spread jet" is formed both when the jet source is moving and when the point of jet exhaust changes sequentially, i.e., during "imaginary" movement of the source.

[0027] The proposed methods for developing thrust make it possible to form helical spread jets, after the nozzles, with low pressure inside which, in centrifugal movement toward the wing perimeter, draw (capture and carry away) into vortex motion a large volume of surrounding fluid, substantially reducing the pressure under the wing (without wing movement in the medium). Thus, thrust efficiency increases, making it possible to get high motion speeds.

[0028] During exhaust of the jets and simultaneous rotation of the rotor with nozzles, and reciprocating or oscillating movement of the nozzles in the "spread jet" area, a system of infinite vortex jets moving from the nozzles to the peripheral area of the wing is generated. The vortices have a much higher energy potential than jets of fluid, and during movement, vortex strings capture and carry away large masses (amount) of ambient air resulting in reducing the air pressure under the wing. The pressure differential above and under the wing results in movement of the apparatus.

[0029] Because the apparatus has no mechanical elements acting on the medium, it simplifies the apparatus' design and results in reducing its dimensions and increasing its reliability, which makes it possible to perform takeoff and landing in any direction without risking damage in the case of contact with surrounding objects.

[0030] Patent research reveals no identical technical solutions, which infers novelty and a level of technicality of the claimed technical solutions.

[0031] The domestic industry has all necessary means (materials, technology and equipment) for the manufacture and widespread multifunctional implementation of the proposed apparatus.

SUMMARY OF THE INVENTION

[0032] The subject of the patent is a group of inventions relating to an apparatus for movement in air and water. The apparatus for movement in fluid comprises an aerodynamic cross-section wing with a convex upper surface, and a source of high pressure fluid interconnected with a means for forming pressure jets over the convex upper surface of the wing. Six embodiments of the apparatus are characterized by the design of the means for forming pressure jets. The method for developing thrust consists of using the means for forming pressure jets over the convex upper surface of the wing. Five embodiments of the method are characterized by the design of the means for forming pressure jets. The group of inventions is aimed to increase efficiency.

BRIEF DESCRIPTION OF THE DRAWINGS

[0033] The essence of the inventions is explained in the drawings where:

[0034] FIG. **1** is a schematic view of the formation of "spread" jets;

[0035] FIG. **2** is a schematic view of the formation of vortices (top view);

[0036] FIG. **3** is a schematic view of the formation of vortices (longitudinal cross-section);

[0037] FIG. **4** is a general view of the means for forming vortices (with a rotor and radial arrangements of the nozzles);

[0038] FIG. **5** is a general view of the means for forming vortex jets (with a rotor and nozzles arranged at an angle);

156 || @HighEarthOrbit_ linktr.ee/Grider2

[0039] FIG. **6** is a general view of the apparatus with a bank of stationary nozzles that simulate a circular motion of the nozzles;

[0040] FIG. **7** is a general view of the means for forming vortices (with reciprocating movement of the nozzles);

[0041] FIG. **8** is a general view of the means for forming vortices (with imitation of the reciprocating movement of the nozzles);

[0042] FIG. **9** is a general view of the means for forming vortices (with reciprocating movement of curved nozzles with a spring);

[0043] FIG. **10** is a general view of the means for forming vortices (with oscillating movement of the nozzles tilted toward the rotor end face);

[0044] FIG. **11** is a general view of a wing in the shape of a spherical segment;

[0045] FIG. **12** is a general view of a wing in the shape of a spherical segment with a hole in its center;

[0046] FIG. **13** is a schematic diagram of the direction of pressure jets when a wing is made in the shape of a spherical segment with a hole in its center;

[0047] FIG. **14** is a general view of a wing in the shape of two spherical segments;

[0048] FIG. **15** is a general view of the apparatus with a wing in the shape of a curved rectangular plate (with an arched bend of its cross-section); and

[0049] FIG. **16** is a general view of the apparatus with a wing in the shape of a curved triangular plate (with an arched bend of its cross-section).

DESCRIPTION OF PREFERRED EMBODIMENTS

[0050] The proposed inventions use a unique feature of gas vortices **1** during their movement to pull in (annex) very large masses of surrounding fluid **2** (FIGS. **2** and **3**) which is caused by the presence of rarefied space in the central area of the vortex **1**. When the vortices **1** move from the center to the edge **3** of the wing **4**, large air masses **2** are captured and carried away which results in a reduction of pressure under the wing **4**. The effect of developing thrust takes place when the source of the pressure jet **5** moves in one direction (circularly), as well as when movement in the plane of the longitudinal axis of the wing **4** reciprocates and when movement in the plane parallel to the longitudinal axis of the wing **4** oscillates.

[0051] The method for developing thrust per claim **1** consists in directing fluid pressure jets **5** from the nozzles along a tangent to the convex upper surface **6** of the aerodynamic cross-section wing **4**, wherein the nozzles **7** are moved at an angle relative to the direction of the fluid pressure jets **5** which capture surrounding fluid by means of vortices **1**.

[0052] The apparatus per claim **2**, and with movement as per the method proposed above, comprises an aerodynamic cross-section wing **4** with a convex upper surface **6** and a source **8** of high pressure fluid interconnected with a means for forming pressure jets **5** from the nozzles **7** directed along a tangent to the convex upper surface **6** of the wing **4**; the source **8** has a drive for rotating the nozzles **7** made in the form of a rotor **9** installed coaxially with the wing's longitudinal axis, with a drive **10** and a hollow axle (not shown), and which is capable of forming pressure jets **5** with vortices **1** (FIG. **4** and FIG. **5**).

[0053] The source **8** of high pressure fluid is made in the form of a (centrifugal or axial) compressor.

[0054] The method for developing thrust as per claim **3** consists in directing fluid pressure jets **5** from the nozzles **7** along a tangent to the convex upper surface **6** of the aerodynamic cross-section wing and, in doing this, sequentially changing the points of exhaust of fluid pressure jets **5** that capture surrounding fluid by means of vortices **1**.

[0055] The apparatus as per claim **4**, for movement in fluid as per the method proposed in claim **3**, comprises an aerodynamic cross-section wing **4** with a convex upper surface **6** and a source of high pressure fluid interconnected with a means for forming pressure jets **5** from the nozzles directed along a tangent to the convex upper surface **6** of the wing **4**. Said means for forming pressure jets **5** is made in the form of a bank of stationary nozzles **11** which are connected to a pulsating air breathing engine **12** and which simulate a circular movement of the nozzles, and capable of forming pressure jets **5** with vortices **1** (FIG. **6**).

[0056] In the apparatus as per claims **2** and **4**, an aerodynamic cross-section wing **4** can be made as a plate in the form of a spherical segment **13** (FIG. **11**), a spherical segment **13** with a hole **14** in the center (FIG. **12** and FIG. **13**), or two spherical segments **15** (FIG. **14**).

[0057] The method for developing thrust as per claim **5** consists in directing fluid pressure jets **5** from the nozzles **7** over the convex upper surface **6** of an aerodynamic cross-section wing **4**, while the nozzles **7** are set to reciprocating movement in the plane of the longitudinal axis of the wing **4** so that fluid pressure jets **5** capture surrounding fluid by means of vortices **1**.

[0058] The apparatus as per claim **6**, for movement in fluid as per the method proposed in claim **5**, comprises an aerodynamic cross-section wing **4** with a convex upper surface **6** and a source **8** of high pressure fluid interconnected with a means for forming pressure jets **5** above the convex upper surface of the wing **4**, wherein said means for forming pressure jets **5** is made in the form of a bank **16** with a hollow axle (not shown) and nozzles **7**. The bank **16** is installed in the plane of the longitudinal axis of the wing **4**, and the nozzles are capable of forming pressure jets **5** with vortices **1** and are connected to a reciprocating motion mechanism (not shown) (FIG. **7**).

[0059] The source **8** of high pressure fluid is made in the form of a (centrifugal or axial) compressor.

[0060] The apparatus as per claim **7**, for movement in fluid as per the method proposed in claim **5**, comprises an aerodynamic cross-section wing **4** with a convex upper surface **6**, a means with nozzles for forming pressure jets over the convex upper surface **6** of the wing **4**, wherein said means for forming pressure jets **5** is made in the form of curved nozzles **17** that are hinge-mounted, connected to a pulsating air breathing engine **12**, and capable of forming pressure jets **5** with vortices **1** and reseting by means of springs **18** (FIG. **9**).

[0061] The method for developing thrust as per claim **8** consists in directing fluid pressure jets **5** from the nozzles **7** over the convex upper surface **6** of the aerodynamic cross-section wing, while simulating, in the wing's longitudinal axis plane, the point of reciprocating exhaust from the nozzles **7** of fluid pressure jets **5** that capture surrounding fluid by means of vortices **1**.

[0062] The apparatus as per claim **9**, for movement in fluid as per the method proposed in claim **8**, comprises an aerodynamic cross-section wing **4** with a convex upper surface **6**, and a means for forming pressure jets **5** over the convex upper surface **6** of the wing **4**, wherein said means for forming pressure jets **5** is made in the form of a bank **19** of stationary

157 || @HighEarthOrbit_ linktr.ee/Grider2

nozzles installed in the plane of the longitudinal axis of the wing **4**, the bank connected to a pulsating air breathing engine **12** capable of reciprocatingly changing the point of exhaust from the nozzles of fluid pressure jets that capture surrounding fluid by means of vortices **1** (FIG. **8**).

[0063] In the apparatus as per claim **9**, an aerodynamic cross-section wing **4** can be made in the shape of a curved rectangular plate **20** with a cross-section in the form of an arc (FIG. **15**) or in the shape of a triangular plate **21** with an arched bending of its cross-section (FIG. **16**). In addition, it is possible to make the wing in the shape of a spherical segment **13** (FIG. **11**), a spherical segment with a hole **14** in the center (FIGS. **12** and **13**), or in the form of two spherical segments **15** (FIG. **14**).

[0064] The method for developing thrust as per claim **10** consists in directing fluid pressure jets **5** from nozzles over the convex upper surface **6** of an aerodynamic cross-section wing **4**, wherein the nozzles of fluid pressure jets **5** are set to oscillating movement in the plane parallel to the longitudinal axis of said wing **4** so that the fluid pressure jets **5** capture surrounding fluid by means of vortices **1**.

[0065] The apparatus as per claim **11**, for movement in fluid as per the method proposed in claim **10**, comprises an aerodynamic cross-section wing **4** with a convex upper surface **6** and a source **8** of high pressure fluid interconnected with a means for forming and directing pressure jets over the convex upper surface **6** of the wing **4**, wherein said means for forming pressure jets is made in the form of a rotor **22** with a hollow axle (not shown) and nozzles **23** installed perpendicularly to the wing's longitudinal axis, symmetrically, on an end face **24** at an angle to the end face **24**, and capable of capturing the surrounding fluid with pressure jets **5** by means of vortices **1** (FIG. **10**).

[0066] The source **8** of high pressure fluid is made in the form of a (centrifugal or axial) compressor, while the wing can have any of the above shapes.

[0067] The apparatus for movement in fluid work as follows.

[0068] Apparatus as per claim **2** (FIG. **4**). A high pressure source **8** and a rotor **10** with nozzles **7** are turned on. Fluid (air or water) pressure jets **5** flow to the nozzles **7** of the apparatus. As a result, pressure jets **5** with vortices **1** are formed after the movable nozzles.

[0069] Apparatus as per claim **6** (FIG. **7**). A high pressure source **8** and a mechanism of reciprocating movement of the nozzles (not shown) are turned on. Fluid (air or water) pressure jets **5** flow to the nozzles **7** of the apparatus. As a result, pressure jets **5** with vortices **1** are formed after the movable nozzles.

[0070] The apparatus per claim **11** (FIG. **10**). A high pressure source **8** interconnected with inclined nozzles installed symmetrically on the end face of a rotor **24** is turned on. As they exhaust from the nozzles, pressure jets cause rotation of the rotor **22**, while the nozzles **23** oscillate with respect to the wing **4**. As a result, pressure jets **5** with vortices **1** are formed after the movable nozzles.

[0071] The apparatus as per claim **4** (FIG. **6**) which, during simulated movement of the nozzles, works as follows: A pulsating air breathing engine **12** is turned on, and the jets that have been formed are fed under pressure in a set sequence to a bank **11** of stationary nozzles located on the bank's cylindrical surface. As a result, pressure jets **5** with vortices **1** are formed after the movable nozzles which simulate circular movement of the nozzles.

[0072] In the case of simulated reciprocating movement of nozzles, the apparatus per claim **9** (FIG. **8**, FIG. **15** and FIG. **16**) works as follows. The pulsating air breathing engine is turned on, and the pressure jets under pressure are fed to the bank **19** (FIG. **8**) or banks (in FIG. **16** and FIG. **16**) of stationary nozzles, located on the same line (linearly), where the point of exhaust of the pressure jets from the nozzles changes in a specified sequence. As a result, pressure jets **5** with vortices **1** are formed.

[0073] The apparatus per claim **7** (FIG. **9**) works as follows. The pulsating air breathing engine **12** connected to the curved nozzles **17** is turned on and is able to reset by means of springs **18**. As a result, the nozzles reciprocate which forms pressure jets **5** with vortices **1**.

[0074] When vortices **1** move from the center to the edge **3** of the wing **4**, large masses of air **2** are captured and carried away, causing a reduction of pressure under the wing **4**. The apparatus (in any of the claimed embodiments) lifts, and moves in the required direction.

[0075] The author conducted tests of laboratory models of the apparatus with various wing shapes; the tests confirmed the apparatus' ability to develop thrust and move in any direction.

What is claimed is:

1. A method for developing thrust that consists of directing fluid pressure jets from nozzles along a tangent to the convex upper surface of an aerodynamic cross-section wing, distinctive in that the nozzles are moved at an angle in the direction of the fluid pressure jets which capture surrounding fluid by means of vortices.

2. An apparatus for movement in fluid comprising an aerodynamic cross-section wing with a convex upper surface and a source of high pressure fluid interconnected with a means for forming pressure jets from nozzles directed along a tangent to the convex upper surface of the wing, distinctive in that it has a drive for rotating the nozzles of said means, the means made in the form of a rotor with a hollow axle installed coaxially with the wing's longitudinal axis and capable of forming pressure jets with vortices.

3. A method for developing thrust that consists of directing fluid pressure jets from nozzles along a tangent to the convex upper surface of an aerodynamic cross-section wing, distinctive in that the points of exhaust of fluid pressure jets that capture surrounding fluid by means of vortices are changed sequentially.

4. An apparatus for movement in fluid comprising an aerodynamic cross-section wing with a convex upper surface and a source of high pressure fluid interconnected with a means for forming pressure jets from nozzles directed along a tangent to the convex upper surface of the wing, distinctive in that said means is made in the form of a bank of stationary nozzles that are connected to a pulsating air breathing engine and simulate circular movement of the nozzles with a capacity to form pressure jets with vortices.

5. A method for developing thrust that consists of directing fluid pressure jets from nozzles over the convex upper surface of an aerodynamic cross-section wing, distinctive in that the nozzles are set to reciprocating movement in the wing's longitudinal axis plane so that fluid pressure jets capture surrounding fluid by means of vortices.

6. An apparatus for movement in fluid comprising an aerodynamic cross-section wing with a convex upper surface and a source of high pressure fluid interconnected with a means for forming pressure jets from nozzles over the convex upper

158 || @HighEarthOrbit_ linktr.ee/Grider2

surface of the wing, distinctive in that the means for forming pressure jets is made in the form of a bank with a hollow axle and nozzles installed in the wing's longitudinal axis plane, the nozzles are made with the capacity to form pressure jets with vortices and connected to a reciprocating motion mechanism.

7. An apparatus for movement in fluid comprising an aerodynamic cross-section wing with a convex upper surface, and a means for forming pressure jets with nozzles over the convex upper surface of the wing, distinctive in that the means for forming pressure jets is made in the form of hinge-mounted curved nozzles connected to a pulsating air breathing engine and made with the capacity to form pressure jets with vortices and to reset by means of springs.

8. A method for developing thrust that consists in directing fluid pressure jets from nozzles over the convex upper surface of an aerodynamic cross-section wing, distinctive in that the point of reciprocating exhaust from the nozzles of fluid pressure jets that capture surrounding fluid by means of vortices is simulated in the wing's longitudinal axis plane.

9. An apparatus for movement in fluid comprising an aerodynamic cross-section wing with a convex upper surface and a means for forming pressure jets over the convex upper surface of the wing, distinctive in that the means for forming pressure jets is made in the form of a bank of stationary nozzles installed in the wing's longitudinal axis plane, and connected to a pulsating air breathing engine capable of reciprocating change of the point of exhaust from the nozzles of fluid pressure jets that entrap surrounding fluid by means of vortices.

10. A method for developing thrust that consists of directing fluid pressure jets from nozzles over the convex upper surface of an aerodynamic cross-section wing, distinctive in that the nozzles of fluid pressure jets are set to oscillating movement in the plane parallel to the longitudinal axis of said wing so that the fluid pressure jets capture surrounding fluid by means of vortices.

11. An apparatus for movement in fluid comprising an aerodynamic cross-section wing with a convex upper surface and a source of high pressure fluid interconnected with a means for forming pressure jets and directing them over the convex upper surface of the wing, distinctive in that the means for forming pressure jets is made in the form of a rotor with a hollow axle and nozzles installed perpendicular to the wing's longitudinal axis, the nozzles installed symmetrically on, and at an angle to, an end face with pressure jets capable of capturing surrounding fluid by means of vortices.

* * * * *

159 || @HighEarthOrbit_ linktr.ee/Grider2

Feb. 27, 1962 J. C. M. FROST ET AL 3,022,963

DISC-TYPE AIRCRAFT WITH PERIPHERAL JET CONTROL

Original Filed May 9, 1955 5 Sheets-Sheet 1

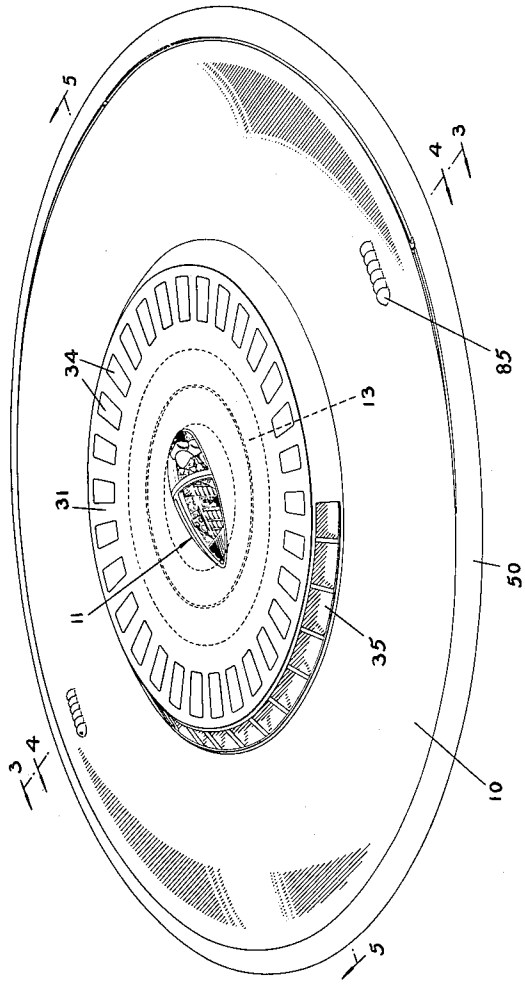

FIG. 1

INVENTORS
J. C. M. FROST
T. D. EARL
BY Maybee & Legris
ATTORNEYS

160 || @HighEarthOrbit_ linktr.ee/Grider2

Feb. 27, 1962 J. C. M. FROST ET AL 3,022,963

DISC-TYPE AIRCRAFT WITH PERIPHERAL JET CONTROL

Original Filed May 9, 1955 5 Sheets-Sheet 2

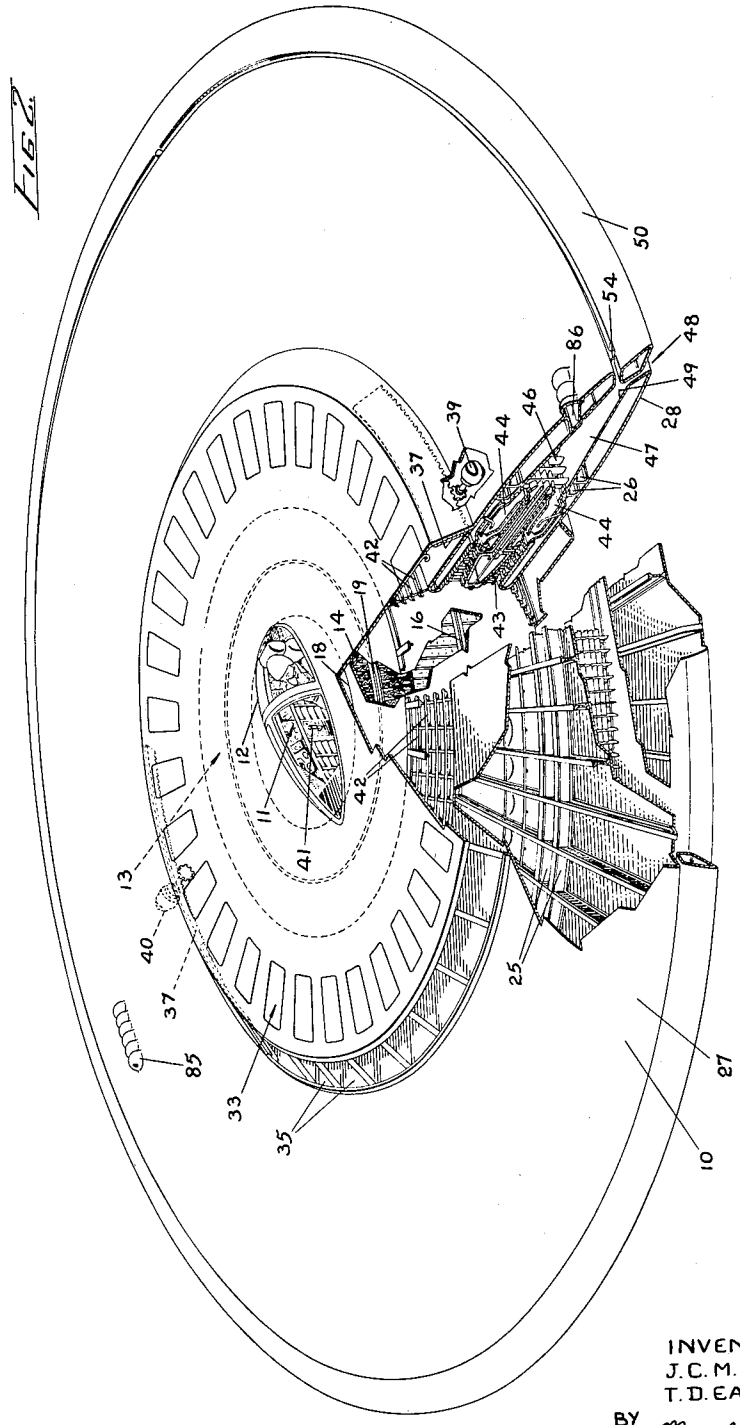

INVENTORS
J. C. M. FROST
T. D. EARL
BY Maybee & Legris
ATTORNEYS

161 || @HighEarthOrbit_ linktr.ee/Grider2

DISC-TYPE AIRCRAFT WITH PERIPHERAL JET CONTROL

Original Filed May 9, 1955 5 Sheets-Sheet 3

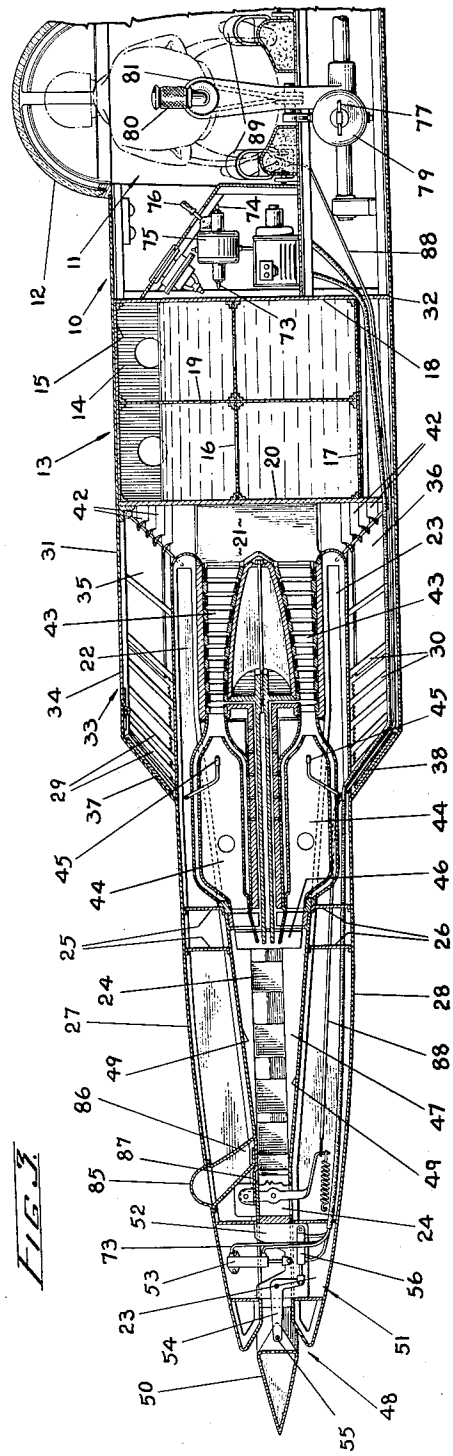

FIG. 3

INVENTORS
J. C. M. FROST
T. D. EARL
BY Maybee & Legris
ATTORNEYS

162 || @HighEarthOrbit_ linktr.ee/Grider2

DISC-TYPE AIRCRAFT WITH PERIPHERAL JET CONTROL

Original Filed May 9, 1955 5 Sheets-Sheet 4

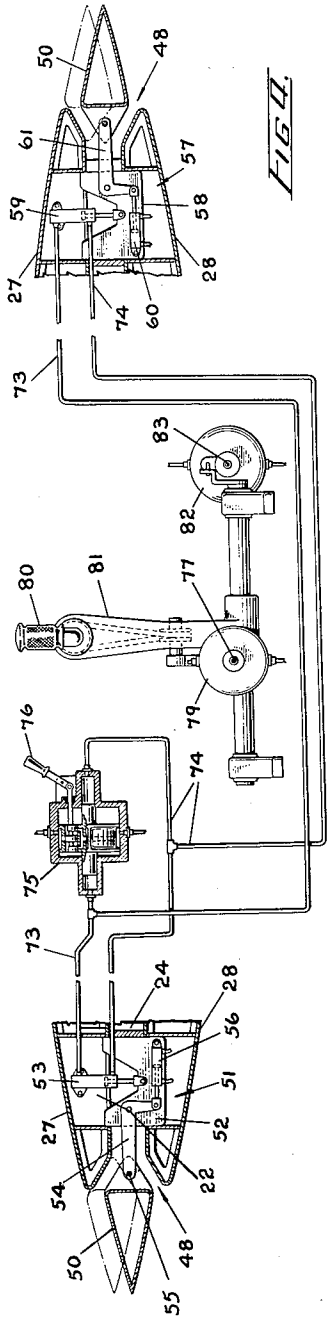

FIG. 4.

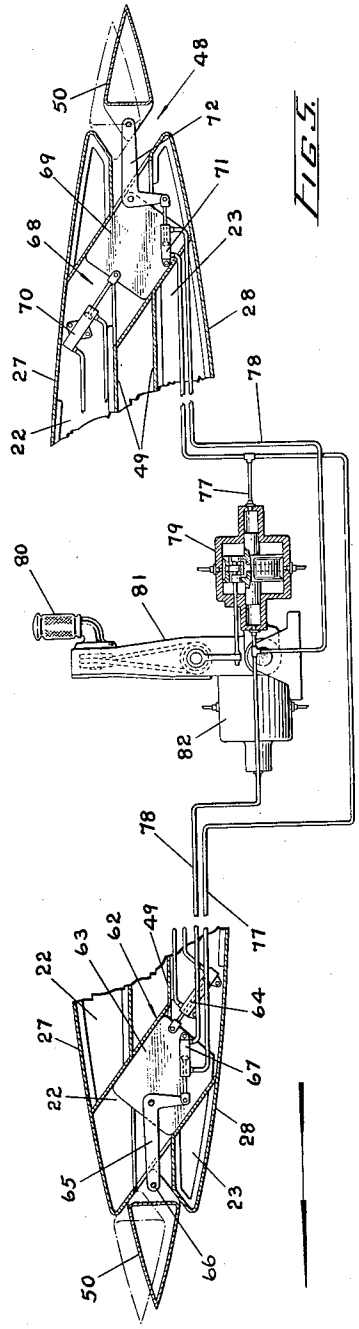

FIG. 5.

INVENTORS
J. C. M. FROST
T. D. EARL
BY Maybee & Segris
ATTORNEYS

163 || @HighEarthOrbit_ linktr.ee/Grider2

Feb. 27, 1962 J. C. M. FROST ET AL 3,022,963

DISC-TYPE AIRCRAFT WITH PERIPHERAL JET CONTROL

Original Filed May 9, 1955 5 Sheets-Sheet 5

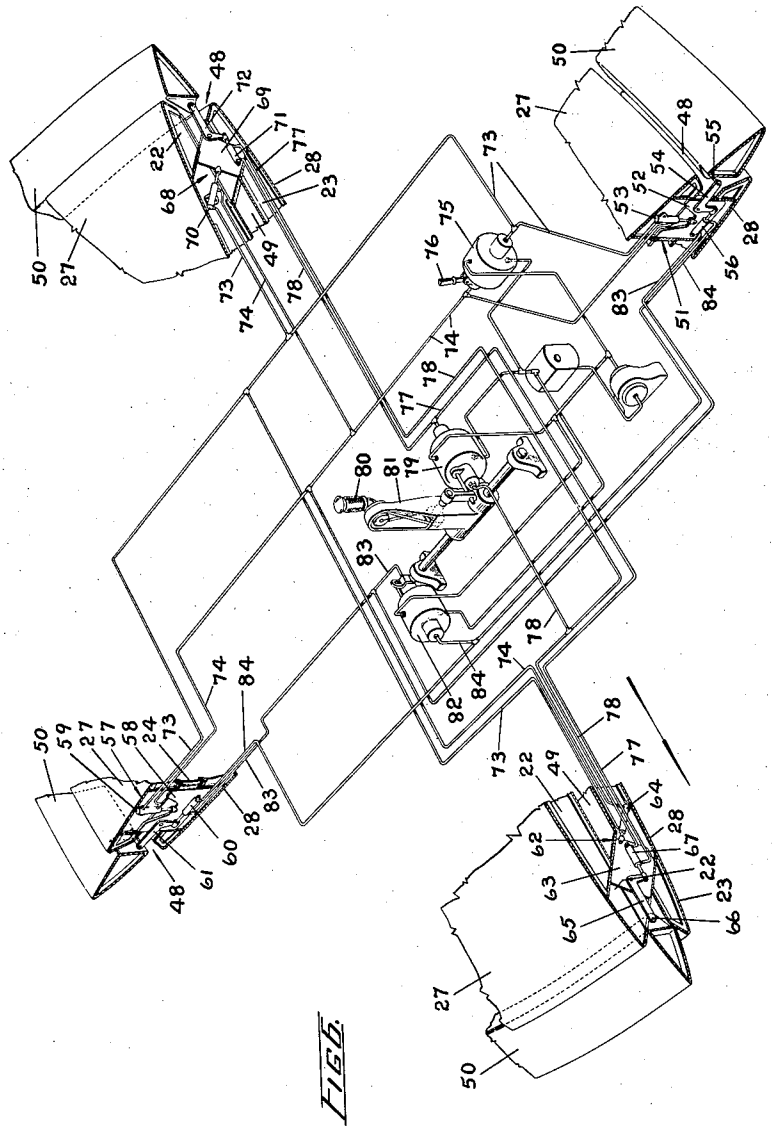

FIG. 6

INVENTORS
J. C. M. FROST
T. D. EARL
BY Maybee & Legris
ATTORNEYS.

164 || @HighEarthOrbit_ linktr.ee/Grider2

United States Patent Office

3,022,963

Patented Feb. 27, 1962

3,022,963
DISC-TYPE AIRCRAFT WITH PERIPHERAL JET CONTROL

John Carver Meadows Frost, Georgetown, Ontario, and Thomas Desmond Earl, Glen Williams, Ontario, Canada, assignors, by mesne assignments, to Avro Aircraft Limited, Malton, Ontario, Canada, a corporation of Canada

Continuation of application Ser. No. 507,098, May 9, 1955. This application Oct. 1, 1957, Ser. No. 688,804
Claims priority, application Great Britain May 11, 1954
23 Claims. (Cl. 244—15)

This application is a continuation of our application Serial No. 507,098, filed May 9, 1955, now abandoned.

The invention relates to the propulsion and control of disc-type or circular aircraft deriving a propulsive thrust from a stream of high speed gases flowing within the aircraft in generally radial directions and discharged from the periphery thereof. An aircraft of this type is disclosed in the co-pending patent application of John Dubbery, John Carver Meadows Frost and Thomas Desmond Earl, Serial No. 684,615, filed on September 17, 1957.

The co-pending application Serial No. 684,615 describes an aircraft which comprises a structure of generally lenticular form and which is sheathed by opposed aerofoil surfaces converging towards each other in an outboard direction from their central inboard portions to their perimetrical edges, and a radial flow gas turbine engine disposed between the said aerofoil surfaces and having a disc-like rotor the plane of rotation of which is approximately parallel to the medial plane between the said opposed surfaces. Air enters inlets provided in the aerofoil surfaces, then after passing through plenum chambers it flows radially outboardly through a double-sided multi-stage radial flow compressor of a gas turbine engine, then into an annularly arranged combustion system of the engine where it supports the combustion of the fuel and from which the products of combustion or gases expand through a radial flow turbine of the engine into a peripheral passage, whence they flow radially outboardly through a perimetrical orifice which forms a constituent part of a Coanda nozzle. The Coanda nozzle is constituted by a gap defined by the perimeter of the upper aerofoil surface and by the upper surface of a hollow toroidal element which perimetrically encompasses the aerofoil surfaces and the lower surface of which blends with the lower aerofoil surface. The gases issuing from the passage are deflected around the toroidal element and adhere to its surface. Co-operating with the Coanda nozzle are means whereby the entrainment on one side of the orifice may be varied selectively at various sectors, and means whereby various sectors of the orifice selectively may be obstructed in toto or in part. More specifically, circumferentially spaced holes are provided in the upper surface of the toroidal element and they are connected through valves responsive to the pilot's controls to an air supply of the engine. By the selective adjustment of the controls the pilot can cause air to be admitted to any desired group of holes, thereby varying selectively the direction and magnitude of the jet emitted in various sectors of the peripheral nozzle, to provide control of the aircraft.

The above described arrangement has been found in practice to cause excessive drag at supersonic speeds. Furthermore, in forward flight, the gases issuing from the forward portion of the aircraft are caused to flow along the under surface of the aircraft and so prevent the use of an air intake on that surface. Consequently, an air intake can be provided only on the upper surface of the aircraft, and as a result of this lack of symmetry large pitching moments may be set up at supersonic speeds.

The main object of the invention is to provide an improved method of propelling and controlling a disc-type aircraft, and of initiating its take-off.

Another object of the invention is to provide control means for a disc-type aircraft which will minimize drag at supersonic speeds.

A further object of the invention is to provide control means for a disc-type aircraft which allows the use of upper and lower air intakes.

The foregoing and other objects and advantages of the invention will become apparent from a study of the following specification, taken in conjunction with the accompanying drawings, in which like reference characters indicate corresponding parts throughout the several views, and in which:

FIG. 1 is a perspective view of an aircraft which embodies the invention, and viewed from above;

FIG. 2 is a perspective view of the said aircraft, partly broken away to show the internal construction;

FIG. 3 is a radial sectional view of the aircraft taken substantially transversely of the direction of flight, and more particularly as indicated by lines 3—3 of FIG. 1;

FIG. 4 is a fragmentary diametrical cross-sectional view of the aircraft, as indicated by the lines 4—4 of FIG. 1, and showing the port and starboard outboard portions and only the relevant pilot's controls in the central portion;

FIG. 5 is a fragmentary diametrical cross-sectional view of the aircraft, as indicated by the lines 5—5 of FIG. 1, and showing the fore and aft outboard portions and only the relevant pilot's controls in the central portion; and

FIG. 6 is a fragmentary perspective view of the aircraft, partly in section and partly in schematic form, and intended particularly to illustrate the control system.

For greater convenience, throughout the description certain terms of positional relationship are used. The terms "outboard" (or "outboardly") and "inboard" (or "inboardly") denote, respectively, greater and lesser distances from the axis of rotation of the rotor which constitutes the centre of the aircraft, and the terms "outer" and "inner" similarly denote greater and lesser distances from a medial plane between the areofoil surfaces, which plane substantially coincides with the plane of the rotor. The terms "vertical," "upwardly," and "downwardly" denote directions approximately normal to the aforesaid medial plane.

It is well known to those skilled in the art that a jet is deflected around the radius in a Coanda nozzle situated in still air by reason of the fact that a positive pressure differential exists between the extended wall of the nozzle and the atmosphere beyond the jet. As the jet issues from the orifice, it is in effect pushed against the extended wall by this difference in pressure, provided that the radius of the wall is not less than a predetermined minimum which is governed by the "effective" pressure of the atmosphere beyond the jet. For a nozzle situated in still air at atmospheric pressure, this radius must be of the order of three times the height or thickness of the orifice from which the jet issues. The radius of the extended wall correspondingly can be reduced for increases in the "effective" pressure beyond the jet: that is, if the "still air" pressure of the atmosphere beyond the jet increases, the required radius of the wall can be decreased correspondingly. Moreover, if a velocity is imparted to the still air at atmospheric pressure, the "effective" pressure is thereby increased, thus making possible the use of a wall having a smaller radius.

The aircraft of the invention is substantially circular in plan form, and in elevation it presents flat double convex surfaces on the central portion of each of which protrude frusto-conical structures; it can be said that the structure is of generally lenticular form, or is "lentiform."

An aircraft embodying the invention may comprise a

165 || @HighEarthOrbit_ linktr.ee/Grider2

central cylindrical shell 10 which houses a pilot's compartment 11 and in which are located the necessary flying instruments and controls. The pilot's compartment is covered by a sealable closure 12.

Encompassing the cylindrical shell 10 is an annular fuel tank generally indicated at 13, and which is constituted by radial baffles 14, an upper annular wall 15, an intermediate annular wall 16 and a lower annular wall 17, and by an inboard cylindrical wall 18, an intermediate cylindrical wall 19 and an outboard cylindrical wall 20.

Radially extending struts 21 are firmly secured to the outboard cylindrical wall 20 of the tank. Secured to the struts 21 are the inboard ends of an upper series of radially disposed ribs 22 and of a lower series of radially disposed ribs 23, an upper rib and the opposed lower rib which is spaced therefrom constituting a pair of ribs. The ribs of each pair are spaced adjacent their outboard ends by a circumferentially arranged group of outboard struts 24; circumferentially disposed stiffeners 25 and 26 are also provided between adjacent ribs.

An annular upper skin 27 is secured to the outer edges of the upper ribs 22, and a similar annular skin 28 is secured to the outer edges of the lower ribs 23. Extending outwardly from the inboard portion of the ribs 22 and 23 and of their skins 27 and 28 are sloping ribbed structures 29 and 30 which are covered respectively by skins 31 and 32; these skins extend inboardly to cover the annular fuel tank and the pilot's compartment. The portions of the aircraft covered by the skins 31 and 32 are frusto-conical, and the skins of these frusto-conical portions together with the skins 27 and 28 constitute the opposed aerofoil surfaces of the aircraft.

On the flat portion of the upper skin 31 are provided circumferentially arranged air inlets 33 which are normally closed by spring loaded doors 34. On the forward sectors of the sloping portions of the skins 31 and 32 are additional air inlets 35 and 36 adapted to be closed by sliding doors 37 and 38 respectively. The inner edges of the doors 37 and 38 are provided with gear teeth which mesh with pinions on the shafts of motors 39 and 40 operable by a suitable control 41 in the pilot's compartment.

In operation, air enters the inlets 33 or the inlets 35 and 36, is deflected inwardly by cascades 42, then after passing through a central plenum chamber it flows radially outboardly through a double-sided multi-stage compressor 43, then into an annularly disposed combustion system 44 where it supports combustion of the fuel supplied from the fuel tank to the nozzles 45. The products of combustion expand through a single-stage radial flow turbine 46 into an annular jet exhauster duct 47; the flow of products of combustion through the jet exhauster duct is in generally radial directions. The compressor and the turbine have a common rotor which in the construction illustrated is supported by radial load and axial load air bearings.

From the jet exhauster duct 47 the products of combustion pass through a perimetrical orifice or outlet 48 and thence to atmosphere to provide a propulsive thrust.

The orifice 48 and the exhauster duct 47 are constituted by spaced annular plates 49 secured to the inner edges of the ribs 22 and 23 respectively, and which at their outboard edges diverge to blend with the outboard edges of the skins 27 and 28.

The orifice 48 is substantially V-shaped in cross-section, and encompassing it is an annulus or annular plug 50. The cross-section of the annulus 50 and its diameter are so dimensioned that when the annulus is positioned concentrically in the orifice it may make circumferential contact with one of the orifice walls but be spaced from the opposed wall to define a passage. The inboard diameter of the annulus is less than the outboard diameter of the orifice so that outward movement of the annulus (i.e., movement in a direction normal to the medial plane between the aerofoil surfaces) is limited by the orifice walls. The annulus is diamond-shaped, and preferably its inboard faces are disposed at angles of say 60° relative to the medial plane, and its outboard faces are disposed at angles of say 30° relative to the medial plane. The inboard faces blend smoothly with the outboard faces to form continuous symmetrical upper and lower surfaces.

It will be seen from the drawings that the orifice 48 and the annulus 50 together constitute a bifurcated duct when the annulus is in the centralized position (i.e., coincides with the medial plane) so that the products of combustion are separated or bifurcated to form jets having opposed vertical components of thrust. When the annulus is moved outwardly from the centralized position a resultant vertical component of thrust will be produced in a sense opposite the sense of movement of the annulus relative to the centralized position. The edges of the orifice walls and of the annulus are radiused generously to provide corners around which the gases may bend in accordance with the Coanda effect.

Referring particularly to FIGS. 4, 5 and 6, the annulus 50 is provided at four points with supporting means whereby portions of it may be displaced outwardly relative to the orifice (i.e. in a direction normal to the medial plane between the aerofoil surfaces) and whereby it may also be displaced as a whole eccentrically relative to the orifice (i.e. in a direction parallel to the aforesaid medial plane).

The port supporting means generally indicated at 51 comprises a plate 52 slidably mounted in suitable guides under the control of a hydraulic jack 53, the body of the jack being anchored on a rib 22 and its piston being connected to the plate 52. Pivotally mounted on the plate 52 is a bell crank 54, one end of which is connected to the annulus 50 through a pin 55 spanning a slot in the annulus. The other end of the bell crank is pivotally connected to the piston of a jack 56, the body of the said jack being anchored on the plate 52. It will be apparent from an examination of FIG. 3 or 4 that actuation of the jack 53 will cause outward movement of a portion of the annulus relative to its centralized position in the orifice, whilst actuation of the jack 56 will cause movement of the said portion of the annulus 50 in an arc, the main component of motion being vertical (i.e., inwardly and outwardly).

The starboard annulus supporting means which is generally indicated at 57 is similar to the port supporting means. It includes a plate 58 adapted to slide vertically in suitable guides under the control of a hydraulic jack 59 which is anchored to a rib 22. It also includes a jack 60 coupled to a bell crank 61 which is connected to the annulus. The jacks 56 and 60 although connected in parallel move differentially, i.e. they cause the portions of the annulus to which they are connected to move in opposite senses.

The forward annulus supporting means generally indicated at 62 comprises a plate 63 mounted for sliding movement in suitable sloping guides under the control of a jack 64; the body of the jack is anchored on a rib 23, while its piston is connected to the plate 63. Pivotally mounted on the plate is a bell crank 65, one end of which is connected to the annulus 50 through a pin 66 which spans a slot in the annulus and the other end of which is connected to the piston of a jack 67 anchored on the plate 63.

When the piston of the jack 64 is positioned as shown in FIG. 5 it holds the forward portion of the annulus in centralized position relative to the orifice and also eccentrically relative thereto, thus sealing the forward portion of the orifice. If the jack 64 is actuated to shift its piston to the alternative position, the forward portion of the annulus will move to the position shown in chain dotted lines in FIG. 5, that is, it will move outwardly and outboardly relative to the orifice to assume a concentric position. When the piston of the jack 64 is in the said alternative position, actuation of the jack 67

166 || @HighEarthOrbit_ linktr.ee/Grider2

will cause movement of the forward portion of the annulus in an arc, the main component of motion being vertical and in a downward sense; movement in an upward sense obviously is not possible. When the forward portion of the annulus is in the centralized position as shown in full lines in FIG. 5, the jack **67** is inoperative.

The aft annulus supporting means which is generally indicated at **68** is substantially similar to the forward supporting means **62**. It includes a plate **69** mounted for sliding movement in suitable sloping guides under the control of a jack **70** anchored on a rib **22**. It also includes a jack **71** coupled to a bell crank **72** which is connected to the annulus **50**.

When the piston of the jack **70** is positioned as shown in FIG. 5 it holds the aft portion of the annulus in such a position that the annulus as a whole is eccentric relative to the orifice and the aft portion is in centralized position relative thereto; actuation of the jack **72** will cause movement of the aft portion of the annulus **50** in an arc, the main component of motion being vertical. If the jack **70** is actuated to shift its piston to the alternative position, the aft portion of the annulus will move outwardly relative to its centralized position and also inboardly to assume a concentric position relative to the orifice; when the piston of the jack **70** is in the said alternative position, the jack **71** may be actuated only to move the annulus inwardly.

The jacks **53**, **59**, **64** and **70** are connected in parallel and operable in unison. They are connected through hydraulic lines **73** and **74** to a suitable two-position servo motor **75** in the pilot's compartment and which is conditionable by a selector handle **76**. The selector handle may be set at "flying position" as illustrated in FIG. 4, or at "take-off position." When the selector handle is at flying position the annulus **50** is in the position shown in full lines in the drawings, that is, it is disposed eccentrically relative to the orifice. If the selector handle **76** is moved to the alternative or take-off postion the servo motor **75** will cause the annulus **50** to move to the chain dotted position of FIGS. 4 and 5; the port and starboard portions of the annulus will move outwardly relative to the medial plane, whilst the forward portion will move outwardly and outboardly, and the aft portion will move outwardly and inboardly. Thus with the selector handle **76** in the take-off position the annulus is disposed concentrically relative to the orifice but outwardly relative to the medial plane to make circumferential contact with the upper wall of the orifice and to provide in co-operation with the lower wall a downwardly directed annular gap.

The forward jack **67** and the aft jack **71** are connected through hydraulic lines **77** and **78** to a multi-position servo motor **79** which is controlled by the lateral movements of a control handle **80** mounted on a control column **81**. Since the details of construction of the control system and particularly of the servo motors are not essential parts of the invention, these features will not be described in detail. However, the operation of the control system easily may be understood by an examination of the drawings.

When the selector handle **76** is in flying position, movement of the control handle **80** towards starboard will apply pressure to the right-hand side of the piston of the aft jack **71** thus urging the aft portion of the annulus **50** downwardly so that the exhaust gases cause a resultant upward thrust on the aft portion of the aircraft. The movement of the control handle **80** towards starboard has no effect on the forward jack **67** when the selector handle **76** is in flying position since the forward portion of the annulus is then centralized in the orifice and in effect is wedged therein. When the selector handle **76** is in flying position, movement of the control handle **80** towards port will cause the aft portion of the annulus to move upwardly so that the exhaust gases cause a resultant upward thrust on the aft portion of the aircraft; the forward portion of the annulus does not move since it is wedged in the orifice.

When the selector handle **76** is in take-off position, movement of the control handle **80** to starboard will cause the aft portion of the annulus to move downwardly but will have no effect on the forward portion of the annulus, whilst movement of the control handle to port will cause the forward portion of the annulus to move downwardly but will have no effect on the aft portion of the annulus.

The port jack **56** and the starboard jack **60** are controlled by the fore and aft movement of the control column **81** which is connected by a suitable linkage to the control valve of a servo motor **82**. Servo motor **82**, which is similar in construction to the servo motor **79**, is connected by hydraulic lines **83** and **84** to the jacks **56** and **60**. The operation of these two jacks can best be understood if it is assumed that selector handle **76** is in flying position so that the annulus **50** is in the position shown in full lines in FIGS. 4 and 5. If the control column **81** is moved forwardly the port jack **56** will be actuated to move the port side of the annulus downwardly thus increasing the upward thrust of the exhaust gases on the port side of the aircraft, whilst the starboard jack **60** will be actuated to move the starboard side of the annulus upwardly, thus increasing the downward thrust of the gases on the starboard side of the aircraft. If the pilot pulls back the control column, the operation of the jacks **56** and **60** is reversed with a consequent reversal of the direction of the increased thrust on the sides of the aircraft.

When the selector handle **76** is in take-off position the upper inboard portion of the annulus **50** is in contact with the upper wall of the orifice. If the control column **81** is moved either forwardly or rearwardly from neutral position when the selector handle is in take-off position, either the port side or the starboard side of the annulus (depending on the direction in which the control column is moved) will move downwardly whilst the other side will be unable to move.

Rerawardly directed louvres **85** are provided in the upper aerofoil surface of the port and starboard sides of the aircraft. These louvres are connected by ducts **86** to the jet exhauster duct **47**; thus a small fraction of the exhaust gases may be ejected to atmosphere through the louvres. The ducts may be opened or closed selectively by sliding shutters **87** which are linked by flexible actuating cables **88** to the respective rudder pedals **89** situated in the pilot's compartment. The additional thrust component caused by the exhaust gases ejected selectively through the port or starboard louvres **85** is sufficient to cause an unbalance of the forces about the yaw axis of the aircraft to provide directional control.

In operation, with the aircraft on the ground in a horizontal attitude, the pilot sets the control column **81** and the control handle **80** in central or neutral position so that the annulus **50** lies parallel to the medial plane of the aircraft. To take off, the selector handle **76** is placed at take-off position (the position opposite to that shown in FIG. 4) thus actuating the jacks **53**, **59**, **64** and **70** to locate the annulus in the position shown by chain dotted lines in FIGS. 4 and 5. The exhaust gases thus issue downwardly from the nozzle **48** providing a vertical component of thrust and the aircraft is borne vertically upwardly. The "ground cushion" effect as described in co-pending application Serial No. 502,156 is of assistance in causing take-off of the aircraft. The pilot, by controlling the engine output, is able to raise the aircraft from the ground in vertical ascent while the aircraft retains a horizontal attitude. In order to change from vertical take-off or hovering to forward slight, the selector handle **76** is moved gradually to flight position, thus operating the jacks **53**, **59**, **64** and **70** to move the forward portion of the annulus **50** inboardly with a consequential outboard movement of its aft portion and also to central-

167 || @HighEarthOrbit_ linktr.ee/Grider2

ize the entire annulus relative to the medial plane. The annulus thus assumes the position shown in solid lines in FIGS. 4 and 5.

Lateral and longitudinal control of the aircraft is achieved through the manipulation of the control column **81** and of the control handle **80**. It will be understood that, in aircraft of this type utilizing a radial flow gas turbine engine, the gyroscopic effect of the rotor must be considered when designing an effective control system. In this respect, it is well known to those skilled in the art, that in order to correct a movement which affects the stability of the aircraft, the correcting moment must be applied 90° to the movement affecting the stability, and in a sense depending on the direction of the rotor. It has been assumed herein that the engine rotor rotates clockwise; consequently, for example, an up force must be applied to the port side of the aircraft in order to correct for a downward movement of the forward side of the aircraft.

A forward movement of the control column **81** will actuate the jacks **56** and **60** to cause the port portion of the annulus to move downwardly and to cause the starboard portion to move upwardly, thus applying a downward force to the port side and an upward force to the starboard side and causing the aircraft to "nose down." The jacks **56** and **60** will operate in the reverse manner if the column is pulled back, thus causing the aircraft to "nose up." If the control handle **80** is moved towards port the aft jack **71** will move downwardly thus applying a downward force to the aft portion of the nozzle and causing the port side of the aircraft to tilt downwardly. If the control handle **80** is moved to starboard, the jack **71** will operate in the reverse manner thus causing the starboard side of the aircraft to tilt downwardly.

When the selector handle **76** is in take-off position the aircraft can be trimmed by the operation of the control handle **80** and of the control column **81** in the same manner as described above. Of course, when the selector handle **76** is in take-off position the upper face of the annulus **50** is in circumferential contact with the upper wall of the orifice **48** so that no portion of the annulus can move upwardly, but some portion of the annulus will move downwardly in response to any movement of the control handle **80** or of the control column **81**.

By manipulation of the control handle **80** and of the control column **81** the annulus **50** may be moved in any direction relative to the orifice, within limits set mainly by its dimensions. In so doing it is possible to direct at least 80% of the jet in such a manner that it has a thrust component in the desired direction. In forward flight the remaining 20% of the thrust is recovered completely due to the Coanda principle of an attendant increase in the deflection of a jet around a wall when the effective pressure is increased.

It will be seen from the foregoing that by suitable movements of the annulus it is possible to accomplish all the control functions necessary to achieve complete control of the aircraft at all times.

The form of the invention herein shown and described is to be considered merely as an example. The details of construction of the engine do not form part of the invention, whilst the details of the control system are essentially schematic and by way of example only and are not an essential part of the invention. Obviously many changes in the construction shown not only are possible but may be desirable in order that the aircraft may have optimum performance. Such changes may, of course, be made without departing from the spirit of the invention or the scope of the subjoined claims.

What we claim as our invention is:

1. An aircraft comprising a lentiform structure, means for ejecting gases at high velocity from said aircraft through a substantially annular outlet generally encompassing the aircraft adjacent its outboard periphery, the gases being ejected in the form of a stream generally radial to the yaw axis of the aircraft at a multiplicity of positions distributed about the outlet, means for bifurcating said stream upon its ejection into two diverging streams and for directing said streams to have components of thrust parallel to said yaw axis but of opposite sense.

2. An aircraft as defined in claim 1 wherein said means for bifurcating said stream includes means for selectively reducing one of said two streams to zero to direct all of said gases into the other stream.

3. An aircraft as defined in claim 1 including means for varying the magnitudes of the two streams to thereby vary the relative magnitudes of said components.

4. An aircraft comprising a lentiform structure, means for ejecting gases at high velocity from said aircraft through a substantially annular outlet generally encompassing the aircraft adjacent its outboard periphery, the gases being ejected in the form of a stream generally radial to the yaw axis of the aircraft at a multiplicity of positions distributed about the outlet, means for bifurcating said stream upon its ejection into two diverging streams and for directing said streams to have components of thrust parallel to said yaw axis but of opposite sense, and means for varying the relative magnitudes of said components of thrust of the two streams.

5. An aircraft as defined in claim 1 wherein said means for bifurcating said stream comprises an annular member encompassing said outlet.

6. An aircraft as defined in claim 5 wherein said annular member is provided with at least one surface adjacent said outlet arranged at an angle to the plane of said stream.

7. An aircraft as defined in claim 5 wherein said annular member is provided with outwardly diverging surfaces adjacent said outlet arranged to deflect the gases of said stream into two streams having components of thrust parallel to said yaw axis, and means for moving said member to vary the relative magnitudes of said components of thrust.

8. An aircraft comprising a generally lentiform structure which is sheathed by opposed aerofoil surfaces which provide lift developing surfaces, engine means within the structure and embodying an air displacement passage having an intake and having walls defining an outlet adjacent the perimeter of the structure and from which the air is ejected, the outlet extending around the periphery of the aircraft, an annularly arranged member encompassing the outlet and positioned in the path of the ejected air, the member in co-operation with the walls of the outlet providing two nozzles through which the air is ejected with opposite components of thrust, and means to control the relative magnitudes of the opposite components of thrust of the air ejected through the nozzles.

9. An aircraft comprising a generally lentiform structure which is sheathed by opposed aerofoil surfaces which provide lift developing surfaces, engine means within the structure and embodying an air displacement passage having an intake and an outlet adjacent the perimeter of the structure and from which the air is ejected, the outlet extending around the periphery of the aircraft, a movable annularly arranged member encompassing the outlet, and means to adjustably position the member in the outlet to control the direction of flow of the ejected air to provide a propulsive thrust.

10. An aircraft comprising a generally lentiform structure which is sheathed by opposed aerofoil surfaces which provide lift developing surfaces, engine means within the structure and embodying an air displacement passage having an intake and an outlet adjacent the perimeter of the structure and from which the air is ejected, the outlet extending around the periphery of the aircraft, a movable annularly arranged member encompassing the outlet and against the surface of which the ejected air impinges, the impinged surface comprising two contiguous surfaces at an acute angle to each other, means controlling the position of the member relative to the outlet in a direction

168 || @HighEarthOrbit_ linktr.ee/Grider2

normal to the medial plane of the aircraft, and means for shifting the member relative to the outlet in directions parallel to the aforesaid medial plane.

11. An aircraft comprising a generally lentiform structure which is sheathed by opposed aerofoil surfaces which provide lift developing surfaces, engine means within the structure and embodying an air displacement passage having an intake and an outlet adjacent the perimeter of the structure and from which the air is ejected in generally radial directions, the outlet extending around the periphery of the aircraft and being defined by outboardly diverging opposed annular walls, a movable annularly arranged member encompassing the outlet, the cross-section of the member and its diameter being so dimensioned that when the member is positioned concentrically in the outlet it may make circumferential contact with one of the outlet walls but be spaced from the opposed wall to define therewith an outlet passage, and means to adjustably position the member in the outlet to control the direction of flow of the ejected air and thus provide a propulsive thrust.

12. An aircraft comprising a generally lentiform structure which is sheathed by opposed aerofoil surfaces which provide lift developing surfaces, engine means within the structure and embodying an air displacement passage having an intake and an outlet adjacent the perimeter of the structure and from which the air is ejected in generally radial directions, the outlet extending around the periphery of the aircraft and being defined by outboardly diverging opposed annular walls, a movable annularly arranged member encompassing the outlet, the cross-section of the member and its diameter being so dimensioned that when the member is positioned concentrically in the outlet it may make circumferential contact with one of the outlet walls but be spaced from the opposed wall to define therewith an outlet passage, means controlling the position of the member in the outlet in a direction normal to the medial plane between the aerofoil surfaces, and means for shifting the member eccentrically relative to the outlet.

13. An aircraft comprising a generally lentiform structure which is sheathed by opposed aerofoil surfaces which provide lift developing surfaces, engine means within the structure and embodying an air displacement passage having an intake and an outlet adjacent the perimeter of the structure and from which the air is ejected in generally radial directions, the outlet extending around the periphery of the aircraft and being defined by outboardly diverging opposed annular walls, a movable annularly arranged member encompassing the outlet, the cross-section of the member and its diameter being so dimensioned that when the member is positioned concentrically in the outlet it may make circumferential contact with one of the outlet walls but be spaced from the opposed wall to define therewith an outlet passage, and means to adjustably position the member in the outlet to control the direction of flow of the ejected air and thus provide a propulsive thrust, the member being positionable relative to an outlet wall to constitute therewith a Coanda nozzle.

14. An aircraft comprising a generally lentiform structure which is sheathed by opposed aerofoil surfaces which provide lift developing surfaces, engine means within the structure and embodying an air displacement passage having an intake and an outlet adjacent the perimeter of the structure and from which the air is ejected in generally radial directions, the outlet extending around the periphery of the aircraft and being defined by outboardly diverging opposed annular walls, a movable annularly arranged member encompassing the outlet, the cross-section of the member and its diameter being so dimensioned that when the member is positioned concentrically in the outlet it may make circumferential contact with one of the outlet walls but be spaced from the opposed wall to define therewith an outlet passage, supporting means for the member and conditionable to hold the member at a take-off position where the member is concentric with the outlet and at a flying position where the member is eccentric with the outlet, and pilot operated means to condition the supporting means.

15. An aircraft comprising a generally lentiform structure which is sheathed by opposed aerofoil surfaces which provide lift developing surfaces, engine means within the structure and embodying an air displacement passage having an intake and an outlet adjacent the perimeter of the structure and from which the air is ejected in generally radial directions, the outlet extending around the periphery of the aircraft and being defined by outboardly diverging opposed annular walls, a movable annularly arranged member encompassing the outlet, the cross-section of the member and its diameter being so dimensioned that when the member is positioned concentrically in the outlet it may make circumferential contact with one of the outlet walls but be spaced from the opposed wall to define therewith an outlet passage, supporting means for the member and conditionable to hold the member at a take-off position where the member is concentric with the outlet and at a flying position where the member is eccentric with the outlet, the supporting means including means for shifting the member relative to the outlet in a direction generally normal to the medial plane of the aircraft so as to trim the aircraft when the member is held concentrically or eccentrically by the supporting means.

16. An aircraft comprising a generally lentiform structure which is sheathed by opposed aerofoil surfaces which provide lift developing surfaces, engine means within the structure and embodying an air displacement passage having an intake and an outlet adjacent the perimeter of the structure and from which the air is ejected in generally radial directions, the outlet extending around the periphery of the aircraft and being defined by outboardly diverging opposed annular walls, a movable annularly arranged member encompassing the outlet, the cross-section of the member and its diameter being so dimensioned that when the member is positioned concentrically in the outlet it may make circumferential contact with one of the outlet walls but be spaced from the opposed wall to define therewith an outlet passage, means for movably supporting the member at each of its front, rear, and two side sectors, each of the said means comprising elements operable in unison to locate selectively the member at a take-off position where it is substantially concentric with the outlet and at a flying position where it is displaced eccentrically relative to the outlet in a rearward direction to seal the front portion of the outlet, and elements to shift the rear and the side sectors in a direction transverse to the medial plane of the aircraft so as to trim the aircraft, and pilot operated means for operating the elements.

17. An aircraft comprising a generally lentiform structure which is sheathed by opposed aerofoil surfaces which provide lift developing surfaces, engine means within the structure and embodying an air displacement passage having an intake and an outlet adjacent the perimeter of the structure and from which the air is ejected in generally radial directions, the outlet extending around the periphery of the aircraft and being defined by outboardly diverging opposed annular walls, a movable annularly arranged member encompassing the outlet, the cross-section of the member and its diameter being so dimensioned that when the member is positioned concentrically in the outlet it may make circumferential contact with one of the outlet walls but be spaced from the opposed wall to define therewith an outlet passage, means for movably supporting the member at each of its front, rear, and two side sectors, each of the said means comprising elements operable in unison to locate selectively the member at a take-off position where it is substantially concentric with the outlet and at a flying position where it is displaced

169 || @HighEarthOrbit_ linktr.ee/Grider2

eccentrically relative to the outlet in a rearward direction to seal the front portion of the outlet, an element to shift the rear sector in a direction transverse to the medial plane of the aircraft, elements to shift the side sectors in unison in a direction transverse to the aforesaid medial plane but in respectively opposite senses, and pilot controlled means for selectively operating the elements.

18. An aircraft comprising a generally lentiform structure sheathed by opposed lift developing surfaces, a gas displacement passage in the structure having an intake and having a substantially annular outlet adjacent to the periphery of the structure, the passage extending generally radially relatively to the yaw axis of the aircraft in a multiplicity of diverging directions, the annulus defining the outlet being disposed generally perpendicular to the yaw axis, means for impelling gas to flow through the passage from the intake to the outlet in a plurality of centrifugal directions relative to the yaw axis, and further means, associated with the outlet, for bifurcating the stream of gases passing through the outlet into two diverging streams and operable to direct said streams to provide components of thrust on the aircraft parallel to the yaw axis and of opposite sense.

19. An aircraft as defined in claim 18, wherein said means for bifurcating said stream includes means for selectively reducing one of said two streams to zero to direct all of said gases into the other stream.

20. An aircraft as defined in claim 18, including means for varying the magnitudes of the two streams to thereby vary the relative magnitudes of said components.

21. An aircraft as defined in claim 18, wherein said means for bifurcating said stream comprises an annular member encompassing said outlet.

22. An aircraft comprising a generally lentiform structure sheathed by opposed lift developing surfaces, a gas displacement passage in the structure having an intake and a substantially annular outlet adjacent to the periphery of the structure, the passage extending generally radially relatively to the yaw axis of the aircraft in a multiplicity of diverging directions, the annulus defining the outlet being disposed generally perpendicular to the yaw axis, means for impelling gas to flow through the passage from the intake to the outlet in a plurality of centrifugal directions relative to the yaw axis, further means, associated with the outlet, for bifurcating the stream of gases passing through the outlet into two diverging streams, said further means being operable to direct said streams to provide components of thrust on the aircraft parallel to the yaw axis and also to vary the relative magnitudes of said components of thrust.

23. An aircraft comprising a generally lentiform structure sheathed by opposed lift developing surfaces, a gas displacement passage in the structure having an inlet and a substantially annular outlet adjacent to the periphery of the structure, the passage extending generally radially relatively to the yaw axis of the aircraft in a multiplicity of diverging directions, the annulus defining the outlet being disposed generally perpendicular to the yaw axis, means for impelling air to flow through the passage from the intake in a plurality of centrifugal directions relative to the yaw axis, means for compressing the centrifugally flowing air, means for burning fuel in the compressed air, the combustion gases resulting from the burning of the fuel being emitted as a stream from the outlet, and further means, associated with the outlet, for bifurcating the stream of gases emitted from the outlet into two diverging streams and operable to direct said streams to provide components of thrust on the aircraft parallel to the yaw axis and of opposite sense.

References Cited in the file of this patent

UNITED STATES PATENTS

2,008,464	Nishi	July 16, 1935
2,465,457	Johnston	Mar. 29, 1949
2,468,787	Sharpe	May 3, 1949

FOREIGN PATENTS

680,401	France	Jan. 18, 1930

170 || @HighEarthOrbit_ linktr.ee/Grider2

Feb. 27, 1962 J. C. M. FROST ET AL 3,022,963

DISC-TYPE AIRCRAFT WITH PERIPHERAL JET CONTROL

Original Filed May 9, 1955 5 Sheets-Sheet 1

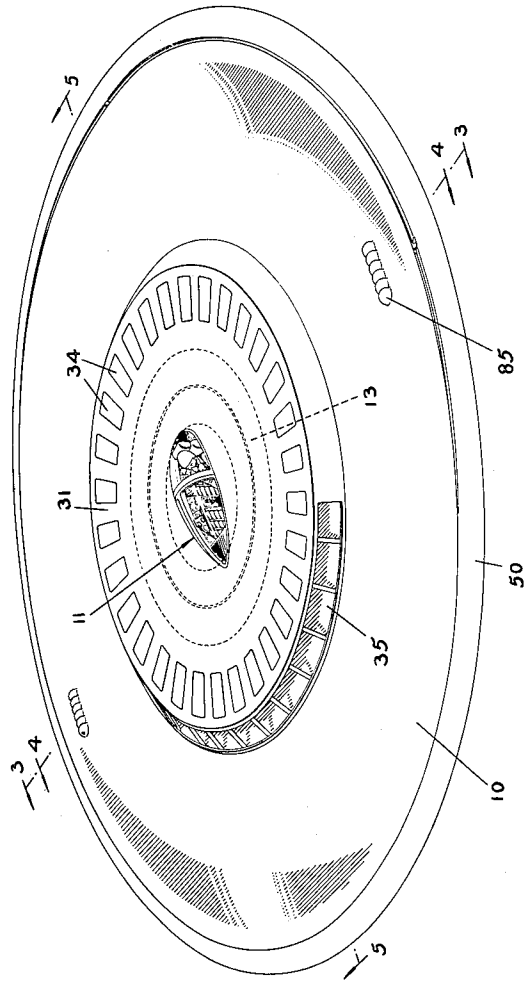

FIG. 1

INVENTORS
J. C. M. FROST
T. D. EARL
BY Maybee & Legris
ATTORNEYS

171 || @HighEarthOrbit_ linktr.ee/Grider2

DISC-TYPE AIRCRAFT WITH PERIPHERAL JET CONTROL

Original Filed May 9, 1955 5 Sheets-Sheet 2

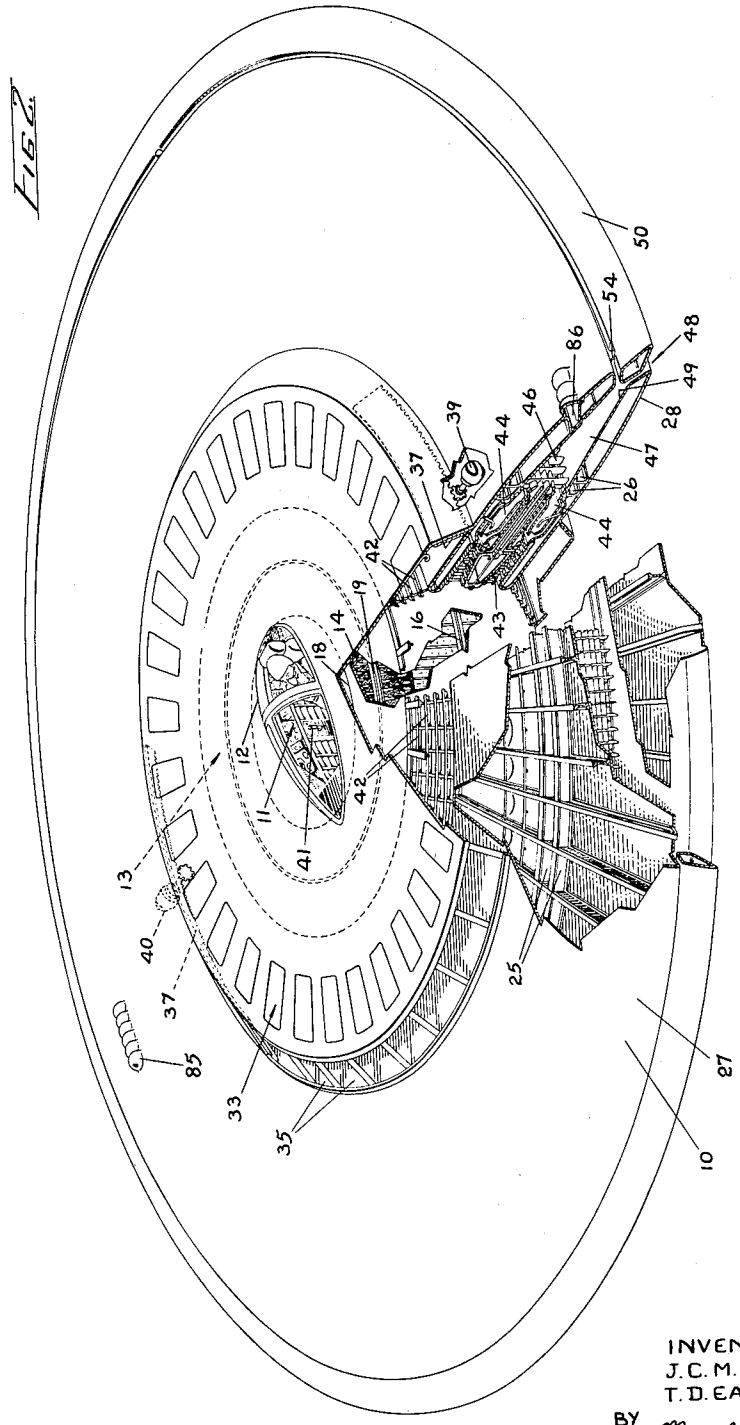

INVENTORS
J. C. M. FROST
T. D. EARL
BY Maybee & Legris
ATTORNEYS

172 || @HighEarthOrbit_ linktr.ee/Grider2

DISC-TYPE AIRCRAFT WITH PERIPHERAL JET CONTROL

Original Filed May 9, 1955 5 Sheets-Sheet 3

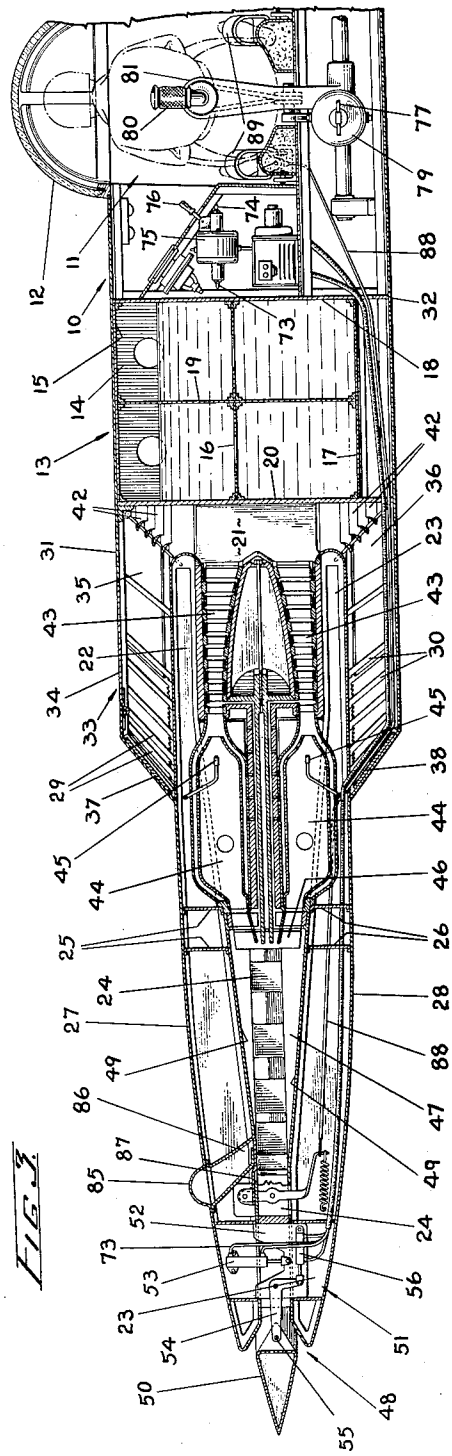

INVENTORS
J. C. M. FROST
T. D. EARL
BY Maybee & Legris
ATTORNEYS

173 || @HighEarthOrbit_ linktr.ee/Grider2

DISC-TYPE AIRCRAFT WITH PERIPHERAL JET CONTROL

Original Filed May 9, 1955 5 Sheets-Sheet 4

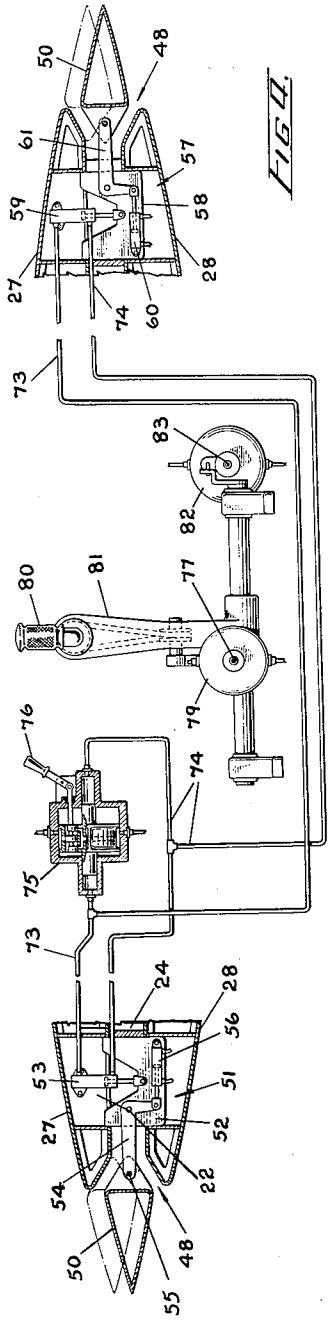

FIG. 4.

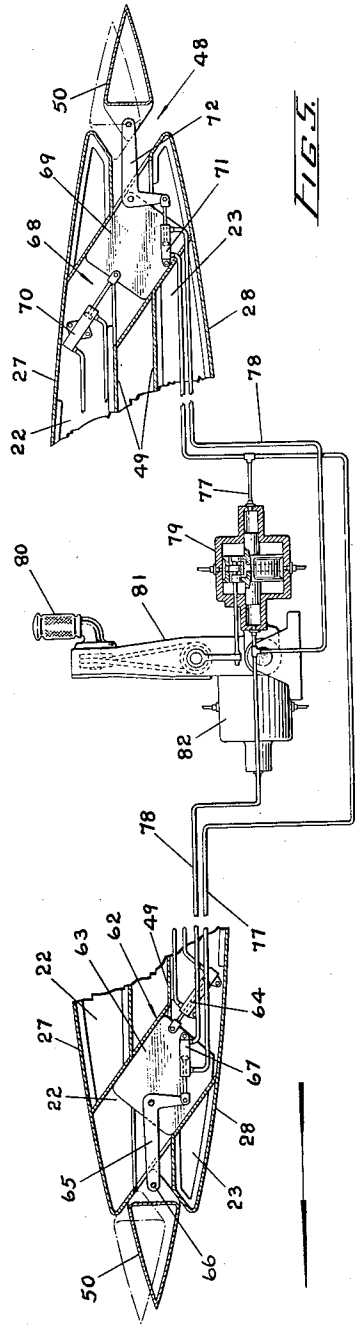

FIG. 5.

INVENTORS
J. C. M. FROST
T. D. EARL
BY Maybee & Segris
ATTORNEYS

174 || @HighEarthOrbit_ linktr.ee/Grider2

DISC-TYPE AIRCRAFT WITH PERIPHERAL JET CONTROL

Original Filed May 9, 1955 5 Sheets-Sheet 5

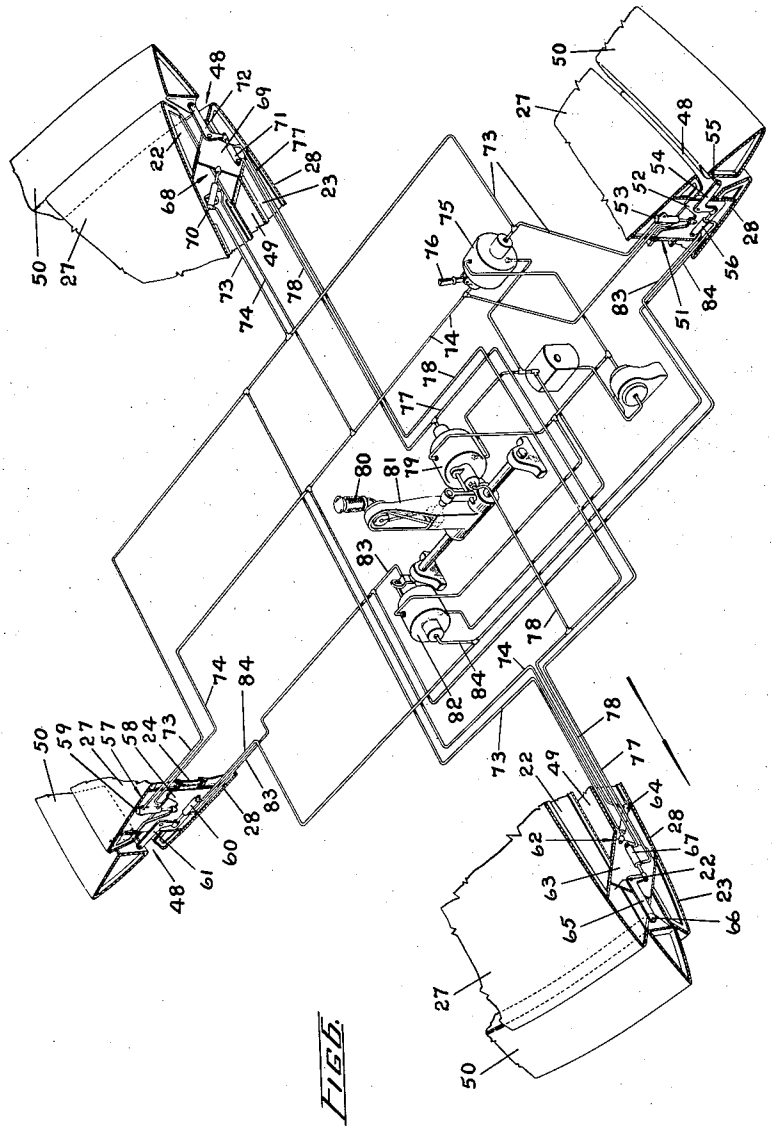

FIG. 6

INVENTORS
J. C. M. FROST
T. D. EARL
BY Maybee & Legris
ATTORNEYS.

175 || @HighEarthOrbit_ linktr.ee/Grider2

United States Patent Office

3,022,963

Patented Feb. 27, 1962

3,022,963
DISC-TYPE AIRCRAFT WITH PERIPHERAL JET CONTROL

John Carver Meadows Frost, Georgetown, Ontario, and Thomas Desmond Earl, Glen Williams, Ontario, Canada, assignors, by mesne assignments, to Avro Aircraft Limited, Malton, Ontario, Canada, a corporation of Canada

Continuation of application Ser. No. 507,098, May 9, 1955. This application Oct. 1, 1957, Ser. No. 688,804
Claims priority, application Great Britain May 11, 1954
23 Claims. (Cl. 244—15)

This application is a continuation of our application Serial No. 507,098, filed May 9, 1955, now abandoned.

The invention relates to the propulsion and control of disc-type or circular aircraft deriving a propulsive thrust from a stream of high speed gases flowing within the aircraft in generally radial directions and discharged from the periphery thereof. An aircraft of this type is disclosed in the co-pending patent application of John Dubbery, John Carver Meadows Frost and Thomas Desmond Earl, Serial No. 684,615, filed on September 17, 1957.

The co-pending application Serial No. 684,615 describes an aircraft which comprises a structure of generally lenticular form and which is sheathed by opposed aerofoil surfaces converging towards each other in an outboard direction from their central inboard portions to their perimetrical edges, and a radial flow gas turbine engine disposed between the said aerofoil surfaces and having a disc-like rotor the plane of rotation of which is approximately parallel to the medial plane between the said opposed surfaces. Air enters inlets provided in the aerofoil surfaces, then after passing through plenum chambers it flows radially outboardly through a double-sided multi-stage radial flow compressor of a gas turbine engine, then into an annularly arranged combustion system of the engine where it supports the combustion of the fuel and from which the products of combustion or gases expand through a radial flow turbine of the engine into a peripheral passage, whence they flow radially outboardly through a perimetrical orifice which forms a constituent part of a Coanda nozzle. The Coanda nozzle is constituted by a gap defined by the perimeter of the upper aerofoil surface and by the upper surface of a hollow toroidal element which perimetrically encompasses the aerofoil surfaces and the lower surface of which blends with the lower aerofoil surface. The gases issuing from the passage are deflected around the toroidal element and adhere to its surface. Co-operating with the Coanda nozzle are means whereby the entrainment on one side of the orifice may be varied selectively at various sectors, and means whereby various sectors of the orifice selectively may be obstructed in toto or in part. More specifically, circumferentially spaced holes are provided in the upper surface of the toroidal element and they are connected through valves responsive to the pilot's controls to an air supply of the engine. By the selective adjustment of the controls the pilot can cause air to be admitted to any desired group of holes, thereby varying selectively the direction and magnitude of the jet emitted in various sectors of the peripheral nozzle, to provide control of the aircraft.

The above described arrangement has been found in practice to cause excessive drag at supersonic speeds. Furthermore, in forward flight, the gases issuing from the forward portion of the aircraft are caused to flow along the under surface of the aircraft and so prevent the use of an air intake on that surface. Consequently, an air intake can be provided only on the upper surface of the aircraft, and as a result of this lack of symmetry large pitching moments may be set up at supersonic speeds.

The main object of the invention is to provide an improved method of propelling and controlling a disc-type aircraft, and of initiating its take-off.

Another object of the invention is to provide control means for a disc-type aircraft which will minimize drag at supersonic speeds.

A further object of the invention is to provide control means for a disc-type aircraft which allows the use of upper and lower air intakes.

The foregoing and other objects and advantages of the invention will become apparent from a study of the following specification, taken in conjunction with the accompanying drawings, in which like reference characters indicate corresponding parts throughout the several views, and in which:

FIG. 1 is a perspective view of an aircraft which embodies the invention, and viewed from above;

FIG. 2 is a perspective view of the said aircraft, partly broken away to show the internal construction;

FIG. 3 is a radial sectional view of the aircraft taken substantially transversely of the direction of flight, and more particularly as indicated by lines 3—3 of FIG. 1;

FIG. 4 is a fragmentary diametrical cross-sectional view of the aircraft, as indicated by the lines 4—4 of FIG. 1, and showing the port and starboard outboard portions and only the relevant pilot's controls in the central portion;

FIG. 5 is a fragmentary diametrical cross-sectional view of the aircraft, as indicated by the lines 5—5 of FIG. 1, and showing the fore and aft outboard portions and only the relevant pilot's controls in the central portion; and

FIG. 6 is a fragmentary perspective view of the aircraft, partly in section and partly in schematic form, and intended particularly to illustrate the control system.

For greater convenience, throughout the description certain terms of positional relationship are used. The terms "outboard" (or "outboardly") and "inboard" (or "inboardly") denote, respectively, greater and lesser distances from the axis of rotation of the rotor which constitutes the centre of the aircraft, and the terms "outer" and "inner" similarly denote greater and lesser distances from a medial plane between the areofoil surfaces, which plane substantially coincides with the plane of the rotor. The terms "vertical," "upwardly," and "downwardly" denote directions approximately normal to the aforesaid medial plane.

It is well known to those skilled in the art that a jet is deflected around the radius in a Coanda nozzle situated in still air by reason of the fact that a positive pressure differential exists between the extended wall of the nozzle and the atmosphere beyond the jet. As the jet issues from the orifice, it is in effect pushed against the extended wall by this difference in pressure, provided that the radius of the wall is not less than a predetermined minimum which is governed by the "effective" pressure of the atmosphere beyond the jet. For a nozzle situated in still air at atmospheric pressure, this radius must be of the order of three times the height or thickness of the orifice from which the jet issues. The radius of the extended wall correspondingly can be reduced for increases in the "effective" pressure beyond the jet: that is, if the "still air" pressure of the atmosphere beyond the jet increases, the required radius of the wall can be decreased correspondingly. Moreover, if a velocity is imparted to the still air at atmospheric pressure, the "effective" pressure is thereby increased, thus making possible the use of a wall having a smaller radius.

The aircraft of the invention is substantially circular in plan form, and in elevation it presents flat double convex surfaces on the central portion of each of which protrude frusto-conical structures; it can be said that the structure is of generally lenticular form, or is "lentiform."

An aircraft embodying the invention may comprise a

176 || @HighEarthOrbit_ linktr.ee/Grider2

central cylindrical shell 10 which houses a pilot's compartment 11 and in which are located the necessary flying instruments and controls. The pilot's compartment is covered by a sealable closure 12.

Encompassing the cylindrical shell 10 is an annular fuel tank generally indicated at 13, and which is constituted by radial baffles 14, an upper annular wall 15, an intermediate annular wall 16 and a lower annular wall 17, and by an inboard cylindrical wall 18, an intermediate cylindrical wall 19 and an outboard cylindrical wall 20.

Radially extending struts 21 are firmly secured to the outboard cylindrical wall 20 of the tank. Secured to the struts 21 are the inboard ends of an upper series of radially disposed ribs 22 and of a lower series of radially disposed ribs 23, an upper rib and the opposed lower rib which is spaced therefrom constituting a pair of ribs. The ribs of each pair are spaced adjacent their outboard ends by a circumferentially arranged group of outboard struts 24; circumferentially disposed stiffeners 25 and 26 are also provided between adjacent ribs.

An annular upper skin 27 is secured to the outer edges of the upper ribs 22, and a similar annular skin 28 is secured to the outer edges of the lower ribs 23. Extending outwardly from the inboard portion of the ribs 22 and 23 and of their skins 27 and 28 are sloping ribbed structures 29 and 30 which are covered respectively by skins 31 and 32; these skins extend inboardly to cover the annular fuel tank and the pilot's compartment. The portions of the aircraft covered by the skins 31 and 32 are frusto-conical, and the skins of these frusto-conical portions together with the skins 27 and 28 constitute the opposed aerofoil surfaces of the aircraft.

On the flat portion of the upper skin 31 are provided circumferentially arranged air inlets 33 which are normally closed by spring loaded doors 34. On the forward sectors of the sloping portions of the skins 31 and 32 are additional air inlets 35 and 36 adapted to be closed by sliding doors 37 and 38 respectively. The inner edges of the doors 37 and 38 are provided with gear teeth which mesh with pinions on the shafts of motors 39 and 40 operable by a suitable control 41 in the pilot's compartment.

In operation, air enters the inlets 33 or the inlets 35 and 36, is deflected inwardly by cascades 42, then after passing through a central plenum chamber it flows radially outboardly through a double-sided multi-stage compressor 43, then into an annularly disposed combustion system 44 where it supports combustion of the fuel supplied from the fuel tank to the nozzles 45. The products of combustion expand through a single-stage radial flow turbine 46 into an annular jet exhauster duct 47; the flow of products of combustion through the jet exhauster duct is in generally radial directions. The compressor and the turbine have a common rotor which in the construction illustrated is supported by radial load and axial load air bearings.

From the jet exhauster duct 47 the products of combustion pass through a perimetrical orifice or outlet 48 and thence to atmosphere to provide a propulsive thrust.

The orifice 48 and the exhauster duct 47 are constituted by spaced annular plates 49 secured to the inner edges of the ribs 22 and 23 respectively, and which at their outboard edges diverge to blend with the outboard edges of the skins 27 and 28.

The orifice 48 is substantially V-shaped in cross-section, and encompassing it is an annulus or annular plug 50. The cross-section of the annulus 50 and its diameter are so dimensioned that when the annulus is positioned concentrically in the orifice it may make circumferential contact with one of the orifice walls but be spaced from the opposed wall to define a passage. The inboard diameter of the annulus is less than the outboard diameter of the orifice so that outward movement of the annulus (i.e., movement in a direction normal to the medial plane between the aerofoil surfaces) is limited by the orifice walls. The annulus is diamond-shaped, and preferably its inboard faces are disposed at angles of say 60° relative to the medial plane, and its outboard faces are disposed at angles of say 30° relative to the medial plane. The inboard faces blend smoothly with the outboard faces to form continuous symmetrical upper and lower surfaces.

It will be seen from the drawings that the orifice 48 and the annulus 50 together constitute a bifurcated duct when the annulus is in the centralized position (i.e., coincides with the medial plane) so that the products of combustion are separated or bifurcated to form jets having opposed vertical components of thrust. When the annulus is moved outwardly from the centralized position a resultant vertical component of thrust will be produced in a sense opposite the sense of movement of the annulus relative to the centralized position. The edges of the orifice walls and of the annulus are radiused generously to provide corners around which the gases may bend in accordance with the Coanda effect.

Referring particularly to FIGS. 4, 5 and 6, the annulus 50 is provided at four points with supporting means whereby portions of it may be displaced outwardly relative to the orifice (i.e. in a direction normal to the medial plane between the aerofoil surfaces) and whereby it may also be displaced as a whole eccentrically relative to the orifice (i.e. in a direction parallel to the aforesaid medial plane).

The port supporting means generally indicated at 51 comprises a plate 52 slidably mounted in suitable guides under the control of a hydraulic jack 53, the body of the jack being anchored on a rib 22 and its piston being connected to the plate 52. Pivotally mounted on the plate 52 is a bell crank 54, one end of which is connected to the annulus 50 through a pin 55 spanning a slot in the annulus. The other end of the bell crank is pivotally connected to the piston of a jack 56, the body of the said jack being anchored on the plate 52. It will be apparent from an examination of FIG. 3 or 4 that actuation of the jack 53 will cause outward movement of a portion of the annulus relative to its centralized position in the orifice, whilst actuation of the jack 56 will cause movement of the said portion of the annulus 50 in an arc, the main component of motion being vertical (i.e., inwardly and outwardly).

The starboard annulus supporting means which is generally indicated at 57 is similar to the port supporting means. It includes a plate 58 adapted to slide vertically in suitable guides under the control of a hydraulic jack 59 which is anchored to a rib 22. It also includes a jack 60 coupled to a bell crank 61 which is connected to the annulus. The jacks 56 and 60 although connected in parallel move differentially, i.e. they cause the portions of the annulus to which they are connected to move in opposite senses.

The forward annulus supporting means generally indicated at 62 comprises a plate 63 mounted for sliding movement in suitable sloping guides under the control of a jack 64; the body of the jack is anchored on a rib 23, while its piston is connected to the plate 63. Pivotally mounted on the plate is a bell crank 65, one end of which is connected to the annulus 50 through a pin 66 which spans a slot in the annulus and the other end of which is connected to the piston of a jack 67 anchored on the plate 63.

When the piston of the jack 64 is positioned as shown in FIG. 5 it holds the forward portion of the annulus in centralized position relative to the orifice and also eccentrically relative thereto, thus sealing the forward portion of the orifice. If the jack 64 is actuated to shift its piston to the alternative position, the forward portion of the annulus will move to the position shown in chain dotted lines in FIG. 5, that is, it will move outwardly and outboardly relative to the orifice to assume a concentric position. When the piston of the jack 64 is in the said alternative position, actuation of the jack 67

177 || @HighEarthOrbit_ linktr.ee/Grider2

will cause movement of the forward portion of the annulus in an arc, the main component of motion being vertical and in a downward sense; movement in an upward sense obviously is not possible. When the forward portion of the annulus is in the centralized position as shown in full lines in FIG. 5, the jack **67** is inoperative.

The aft annulus supporting means which is generally indicated at **68** is substantially similar to the forward supporting means **62**. It includes a plate **69** mounted for sliding movement in suitable sloping guides under the control of a jack **70** anchored on a rib **22**. It also includes a jack **71** coupled to a bell crank **72** which is connected to the annulus **50**.

When the piston of the jack **70** is positioned as shown in FIG. 5 it holds the aft portion of the annulus in such a position that the annulus as a whole is eccentric relative to the orifice and the aft portion is in centralized position relative thereto; actuation of the jack **72** will cause movement of the aft portion of the annulus **50** in an arc, the main component of motion being vertical. If the jack **70** is actuated to shift its piston to the alternative position, the aft portion of the annulus will move outwardly relative to its centralized position and also inboardly to assume a concentric position relative to the orifice; when the piston of the jack **70** is in the said alternative position, the jack **71** may be actuated only to move the annulus inwardly.

The jacks **53**, **59**, **64** and **70** are connected in parallel and operable in unison. They are connected through hydraulic lines **73** and **74** to a suitable two-position servo motor **75** in the pilot's compartment and which is conditionable by a selector handle **76**. The selector handle may be set at "flying position" as illustrated in FIG. 4, or at "take-off position." When the selector handle is at flying position the annulus **50** is in the position shown in full lines in the drawings, that is, it is disposed eccentrically relative to the orifice. If the selector handle **76** is moved to the alternative or take-off postion the servo motor **75** will cause the annulus **50** to move to the chain dotted position of FIGS. 4 and 5; the port and starboard portions of the annulus will move outwardly relative to the medial plane, whilst the forward portion will move outwardly and outboardly, and the aft portion will move outwardly and inboardly. Thus with the selector handle **76** in the take-off position the annulus is disposed concentrically relative to the orifice but outwardly relative to the medial plane to make circumferential contact with the upper wall of the orifice and to provide in co-operation with the lower wall a downwardly directed annular gap.

The forward jack **67** and the aft jack **71** are connected through hydraulic lines **77** and **78** to a multi-position servo motor **79** which is controlled by the lateral movements of a control handle **80** mounted on a control column **81**. Since the details of construction of the control system and particularly of the servo motors are not essential parts of the invention, these features will not be described in detail. However, the operation of the control system easily may be understood by an examination of the drawings.

When the selector handle **76** is in flying position, movement of the control handle **80** towards starboard will apply pressure to the right-hand side of the piston of the aft jack **71** thus urging the aft portion of the annulus **50** downwardly so that the exhaust gases cause a resultant upward thrust on the aft portion of the aircraft. The movement of the control handle **80** towards starboard has no effect on the forward jack **67** when the selector handle **76** is in flying position since the forward portion of the annulus is then centralized in the orifice and in effect is wedged therein. When the selector handle **76** is in flying position, movement of the control handle **80** towards port will cause the aft portion of the annulus to move upwardly so that the exhaust gases cause a resultant upward thrust on the aft portion of the aircraft; the forward portion of the annulus does not move since it is wedged in the orifice.

When the selector handle **76** is in take-off position, movement of the control handle **80** to starboard will cause the aft portion of the annulus to move downwardly but will have no effect on the forward portion of the annulus, whilst movement of the control handle to port will cause the forward portion of the annulus to move downwardly but will have no effect on the aft portion of the annulus.

The port jack **56** and the starboard jack **60** are controlled by the fore and aft movement of the control column **81** which is connected by a suitable linkage to the control valve of a servo motor **82**. Servo motor **82**, which is similar in construction to the servo motor **79**, is connected by hydraulic lines **83** and **84** to the jacks **56** and **60**. The operation of these two jacks can best be understood if it is assumed that selector handle **76** is in flying position so that the annulus **50** is in the position shown in full lines in FIGS. 4 and 5. If the control column **81** is moved forwardly the port jack **56** will be actuated to move the port side of the annulus downwardly thus increasing the upward thrust of the exhaust gases on the port side of the aircraft, whilst the starboard jack **60** will be actuated to move the starboard side of the annulus upwardly, thus increasing the downward thrust of the gases on the starboard side of the aircraft. If the pilot pulls back the control column, the operation of the jacks **56** and **60** is reversed with a consequent reversal of the direction of the increased thrust on the sides of the aircraft.

When the selector handle **76** is in take-off position the upper inboard portion of the annulus **50** is in contact with the upper wall of the orifice. If the control column **81** is moved either forwardly or rearwardly from neutral position when the selector handle is in take-off position, either the port side or the starboard side of the annulus (depending on the direction in which the control column is moved) will move downwardly whilst the other side will be unable to move.

Rerawardly directed louvres **85** are provided in the upper aerofoil surface of the port and starboard sides of the aircraft. These louvres are connected by ducts **86** to the jet exhauster duct **47**; thus a small fraction of the exhaust gases may be ejected to atmosphere through the louvres. The ducts may be opened or closed selectively by sliding shutters **87** which are linked by flexible actuating cables **88** to the respective rudder pedals **89** situated in the pilot's compartment. The additional thrust component caused by the exhaust gases ejected selectively through the port or starboard louvres **85** is sufficient to cause an unbalance of the forces about the yaw axis of the aircraft to provide directional control.

In operation, with the aircraft on the ground in a horizontal attitude, the pilot sets the control column **81** and the control handle **80** in central or neutral position so that the annulus **50** lies parallel to the medial plane of the aircraft. To take off, the selector handle **76** is placed at take-off position (the position opposite to that shown in FIG. 4) thus actuating the jacks **53**, **59**, **64** and **70** to locate the annulus in the position shown by chain dotted lines in FIGS. 4 and 5. The exhaust gases thus issue downwardly from the nozzle **48** providing a vertical component of thrust and the aircraft is borne vertically upwardly. The "ground cushion" effect as described in co-pending application Serial No. 502,156 is of assistance in causing take-off of the aircraft. The pilot, by controlling the engine output, is able to raise the aircraft from the ground in vertical ascent while the aircraft retains a horizontal attitude. In order to change from vertical take-off or hovering to forward slight, the selector handle **76** is moved gradually to flight position, thus operating the jacks **53**, **59**, **64** and **70** to move the forward portion of the annulus **50** inboardly with a consequential outboard movement of its aft portion and also to central-

178 || @HighEarthOrbit_ linktr.ee/Grider2

ize the entire annulus relative to the medial plane. The annulus thus assumes the position shown in solid lines in FIGS. 4 and 5.

Lateral and longitudinal control of the aircraft is achieved through the manipulation of the control column **81** and of the control handle **80**. It will be understood that, in aircraft of this type utilizing a radial flow gas turbine engine, the gyroscopic effect of the rotor must be considered when designing an effective control system. In this respect, it is well known to those skilled in the art, that in order to correct a movement which affects the stability of the aircraft, the correcting moment must be applied 90° to the movement affecting the stability, and in a sense depending on the direction of the rotor. It has been assumed herein that the engine rotor rotates clockwise; consequently, for example, an up force must be applied to the port side of the aircraft in order to correct for a downward movement of the forward side of the aircraft.

A forward movement of the control column **81** will actuate the jacks **56** and **60** to cause the port portion of the annulus to move downwardly and to cause the starboard portion to move upwardly, thus applying a downward force to the port side and an upward force to the starboard side and causing the aircraft to "nose down." The jacks **56** and **60** will operate in the reverse manner if the column is pulled back, thus causing the aircraft to "nose up." If the control handle **80** is moved towards port the aft jack **71** will move downwardly thus applying a downward force to the aft portion of the nozzle and causing the port side of the aircraft to tilt downwardly. If the control handle **80** is moved to starboard, the jack **71** will operate in the reverse manner thus causing the starboard side of the aircraft to tilt downwardly.

When the selector handle **76** is in take-off position the aircraft can be trimmed by the operation of the control handle **80** and of the control column **81** in the same manner as described above. Of course, when the selector handle **76** is in take-off position the upper face of the annulus **50** is in circumferential contact with the upper wall of the orifice **48** so that no portion of the annulus can move upwardly, but some portion of the annulus will move downwardly in response to any movement of the control handle **80** or of the control column **81**.

By manipulation of the control handle **80** and of the control column **81** the annulus **50** may be moved in any direction relative to the orifice, within limits set mainly by its dimensions. In so doing it is possible to direct at least 80% of the jet in such a manner that it has a thrust component in the desired direction. In forward flight the remaining 20% of the thrust is recovered completely due to the Coanda principle of an attendant increase in the deflection of a jet around a wall when the effective pressure is increased.

It will be seen from the foregoing that by suitable movements of the annulus it is possible to accomplish all the control functions necessary to achieve complete control of the aircraft at all times.

The form of the invention herein shown and described is to be considered merely as an example. The details of construction of the engine do not form part of the invention, whilst the details of the control system are essentially schematic and by way of example only and are not an essential part of the invention. Obviously many changes in the construction shown not only are possible but may be desirable in order that the aircraft may have optimum performance. Such changes may, of course, be made without departing from the spirit of the invention or the scope of the subjoined claims.

What we claim as our invention is:

1. An aircraft comprising a lentiform structure, means for ejecting gases at high velocity from said aircraft through a substantially annular outlet generally encompassing the aircraft adjacent its outboard periphery, the gases being ejected in the form of a stream generally radial to the yaw axis of the aircraft at a multiplicity of positions distributed about the outlet, means for bifurcating said stream upon its ejection into two diverging streams and for directing said streams to have components of thrust parallel to said yaw axis but of opposite sense.

2. An aircraft as defined in claim 1 wherein said means for bifurcating said stream includes means for selectively reducing one of said two streams to zero to direct all of said gases into the other stream.

3. An aircraft as defined in claim 1 including means for varying the magnitudes of the two streams to thereby vary the relative magnitudes of said components.

4. An aircraft comprising a lentiform structure, means for ejecting gases at high velocity from said aircraft through a substantially annular outlet generally encompassing the aircraft adjacent its outboard periphery, the gases being ejected in the form of a stream generally radial to the yaw axis of the aircraft at a multiplicity of positions distributed about the outlet, means for bifurcating said stream upon its ejection into two diverging streams and for directing said streams to have components of thrust parallel to said yaw axis but of opposite sense, and means for varying the relative magnitudes of said components of thrust of the two streams.

5. An aircraft as defined in claim 1 wherein said means for bifurcating said stream comprises an annular member encompassing said outlet.

6. An aircraft as defined in claim 5 wherein said annular member is provided with at least one surface adjacent said outlet arranged at an angle to the plane of said stream.

7. An aircraft as defined in claim 5 wherein said annular member is provided with outwardly diverging surfaces adjacent said outlet arranged to deflect the gases of said stream into two streams having components of thrust parallel to said yaw axis, and means for moving said member to vary the relative magnitudes of said components of thrust.

8. An aircraft comprising a generally lentiform structure which is sheathed by opposed aerofoil surfaces which provide lift developing surfaces, engine means within the structure and embodying an air displacement passage having an intake and having walls defining an outlet adjacent the perimeter of the structure and from which the air is ejected, the outlet extending around the periphery of the aircraft, an annularly arranged member encompassing the outlet and positioned in the path of the ejected air, the member in co-operation with the walls of the outlet providing two nozzles through which the air is ejected with opposite components of thrust, and means to control the relative magnitudes of the opposite components of thrust of the air ejected through the nozzles.

9. An aircraft comprising a generally lentiform structure which is sheathed by opposed aerofoil surfaces which provide lift developing surfaces, engine means within the structure and embodying an air displacement passage having an intake and an outlet adjacent the perimeter of the structure and from which the air is ejected, the outlet extending around the periphery of the aircraft, a movable annularly arranged member encompassing the outlet, and means to adjustably position the member in the outlet to control the direction of flow of the ejected air to provide a propulsive thrust.

10. An aircraft comprising a generally lentiform structure which is sheathed by opposed aerofoil surfaces which provide lift developing surfaces, engine means within the structure and embodying an air displacement passage having an intake and an outlet adjacent the perimeter of the structure and from which the air is ejected, the outlet extending around the periphery of the aircraft, a movable annularly arranged member encompassing the outlet and against the surface of which the ejected air impinges, the impinged surface comprising two contiguous surfaces at an acute angle to each other, means controlling the position of the member relative to the outlet in a direction

179 || @HighEarthOrbit_ linktr.ee/Grider2

normal to the medial plane of the aircraft, and means for shifting the member relative to the outlet in directions parallel to the aforesaid medial plane.

11. An aircraft comprising a generally lentiform structure which is sheathed by opposed aerofoil surfaces which provide lift developing surfaces, engine means within the structure and embodying an air displacement passage having an intake and an outlet adjacent the perimeter of the structure and from which the air is ejected in generally radial directions, the outlet extending around the periphery of the aircraft and being defined by outboardly diverging opposed annular walls, a movable annularly arranged member encompassing the outlet, the cross-section of the member and its diameter being so dimensioned that when the member is positioned concentrically in the outlet it may make circumferential contact with one of the outlet walls but be spaced from the opposed wall to define therewith an outlet passage, and means to adjustably position the member in the outlet to control the direction of flow of the ejected air and thus provide a propulsive thrust.

12. An aircraft comprising a generally lentiform structure which is sheathed by opposed aerofoil surfaces which provide lift developing surfaces, engine means within the structure and embodying an air displacement passage having an intake and an outlet adjacent the perimeter of the structure and from which the air is ejected in generally radial directions, the outlet extending around the periphery of the aircraft and being defined by outboardly diverging opposed annular walls, a movable annularly arranged member encompassing the outlet, the cross-section of the member and its diameter being so dimensioned that when the member is positioned concentrically in the outlet it may make circumferential contact with one of the outlet walls but be spaced from the opposed wall to define therewith an outlet passage, means controlling the position of the member in the outlet in a direction normal to the medial plane between the aerofoil surfaces, and means for shifting the member eccentrically relative to the outlet.

13. An aircraft comprising a generally lentiform structure which is sheathed by opposed aerofoil surfaces which provide lift developing surfaces, engine means within the structure and embodying an air displacement passage having an intake and an outlet adjacent the perimeter of the structure and from which the air is ejected in generally radial directions, the outlet extending around the periphery of the aircraft and being defined by outboardly diverging opposed annular walls, a movable annularly arranged member encompassing the outlet, the cross-section of the member and its diameter being so dimensioned that when the member is positioned concentrically in the outlet it may make circumferential contact with one of the outlet walls but be spaced from the opposed wall to define therewith an outlet passage, and means to adjustably position the member in the outlet to control the direction of flow of the ejected air and thus provide a propulsive thrust, the member being positionable relative to an outlet wall to constitute therewith a Coanda nozzle.

14. An aircraft comprising a generally lentiform structure which is sheathed by opposed aerofoil surfaces which provide lift developing surfaces, engine means within the structure and embodying an air displacement passage having an intake and an outlet adjacent the perimeter of the structure and from which the air is ejected in generally radial directions, the outlet extending around the periphery of the aircraft and being defined by outboardly diverging opposed annular walls, a movable annularly arranged member encompassing the outlet, the cross-section of the member and its diameter being so dimensioned that when the member is positioned concentrically in the outlet it may make circumferential contact with one of the outlet walls but be spaced from the opposed wall to define therewith an outlet passage, supporting means for the member and conditionable to hold the member at a take-off position where the member is concentric with the outlet and at a flying position where the member is eccentric with the outlet, and pilot operated means to condition the supporting means.

15. An aircraft comprising a generally lentiform structure which is sheathed by opposed aerofoil surfaces which provide lift developing surfaces, engine means within the structure and embodying an air displacement passage having an intake and an outlet adjacent the perimeter of the structure and from which the air is ejected in generally radial directions, the outlet extending around the periphery of the aircraft and being defined by outboardly diverging opposed annular walls, a movable annularly arranged member encompassing the outlet, the cross-section of the member and its diameter being so dimensioned that when the member is positioned concentrically in the outlet it may make circumferential contact with one of the outlet walls but be spaced from the opposed wall to define therewith an outlet passage, supporting means for the member and conditionable to hold the member at a take-off position where the member is concentric with the outlet and at a flying position where the member is eccentric with the outlet, the supporting means including means for shifting the member relative to the outlet in a direction generally normal to the medial plane of the aircraft so as to trim the aircraft when the member is held concentrically or eccentrically by the supporting means.

16. An aircraft comprising a generally lentiform structure which is sheathed by opposed aerofoil surfaces which provide lift developing surfaces, engine means within the structure and embodying an air displacement passage having an intake and an outlet adjacent the perimeter of the structure and from which the air is ejected in generally radial directions, the outlet extending around the periphery of the aircraft and being defined by outboardly diverging opposed annular walls, a movable annularly arranged member encompassing the outlet, the cross-section of the member and its diameter being so dimensioned that when the member is positioned concentrically in the outlet it may make circumferential contact with one of the outlet walls but be spaced from the opposed wall to define therewith an outlet passage, means for movably supporting the member at each of its front, rear, and two side sectors, each of the said means comprising elements operable in unison to locate selectively the member at a take-off position where it is substantially concentric with the outlet and at a flying position where it is displaced eccentrically relative to the outlet in a rearward direction to seal the front portion of the outlet, and elements to shift the rear and the side sectors in a direction transverse to the medial plane of the aircraft so as to trim the aircraft, and pilot operated means for operating the elements.

17. An aircraft comprising a generally lentiform structure which is sheathed by opposed aerofoil surfaces which provide lift developing surfaces, engine means within the structure and embodying an air displacement passage having an intake and an outlet adjacent the perimeter of the structure and from which the air is ejected in generally radial directions, the outlet extending around the periphery of the aircraft and being defined by outboardly diverging opposed annular walls, a movable annularly arranged member encompassing the outlet, the cross-section of the member and its diameter being so dimensioned that when the member is positioned concentrically in the outlet it may make circumferential contact with one of the outlet walls but be spaced from the opposed wall to define therewith an outlet passage, means for movably supporting the member at each of its front, rear, and two side sectors, each of the said means comprising elements operable in unison to locate selectively the member at a take-off position where it is substantially concentric with the outlet and at a flying position where it is displaced

180 || @HighEarthOrbit_ linktr.ee/Grider2

eccentrically relative to the outlet in a rearward direction to seal the front portion of the outlet, an element to shift the rear sector in a direction transverse to the medial plane of the aircraft, elements to shift the side sectors in unison in a direction transverse to the aforesaid medial plane but in respectively opposite senses, and pilot controlled means for selectively operating the elements.

18. An aircraft comprising a generally lentiform structure sheathed by opposed lift developing surfaces, a gas displacement passage in the structure having an intake and having a substantially annular outlet adjacent to the periphery of the structure, the passage extending generally radially relatively to the yaw axis of the aircraft in a multiplicity of diverging directions, the annulus defining the outlet being disposed generally perpendicular to the yaw axis, means for impelling gas to flow through the passage from the intake to the outlet in a plurality of centrifugal directions relative to the yaw axis, and further means, associated with the outlet, for bifurcating the stream of gases passing through the outlet into two diverging streams and operable to direct said streams to provide components of thrust on the aircraft parallel to the yaw axis and of opposite sense.

19. An aircraft as defined in claim 18, wherein said means for bifurcating said stream includes means for selectively reducing one of said two streams to zero to direct all of said gases into the other stream.

20. An aircraft as defined in claim 18, including means for varying the magnitudes of the two streams to thereby vary the relative magnitudes of said components.

21. An aircraft as defined in claim 18, wherein said means for bifurcating said stream comprises an annular member encompassing said outlet.

22. An aircraft comprising a generally lentiform structure sheathed by opposed lift developing surfaces, a gas displacement passage in the structure having an intake and a substantially annular outlet adjacent to the periphery of the structure, the passage extending generally radially relatively to the yaw axis of the aircraft in a multiplicity of diverging directions, the annulus defining the outlet being disposed generally perpendicular to the yaw axis, means for impelling gas to flow through the passage from the intake to the outlet in a plurality of centrifugal directions relative to the yaw axis, further means, associated with the outlet, for bifurcating the stream of gases passing through the outlet into two diverging streams, said further means being operable to direct said streams to provide components of thrust on the aircraft parallel to the yaw axis and also to vary the relative magnitudes of said components of thrust.

23. An aircraft comprising a generally lentiform structure sheathed by opposed lift developing surfaces, a gas displacement passage in the structure having an inlet and a substantially annular outlet adjacent to the periphery of the structure, the passage extending generally radially relatively to the yaw axis of the aircraft in a multiplicity of diverging directions, the annulus defining the outlet being disposed generally perpendicular to the yaw axis, means for impelling air to flow through the passage from the intake in a plurality of centrifugal directions relative to the yaw axis, means for compressing the centrifugally flowing air, means for burning fuel in the compressed air, the combustion gases resulting from the burning of the fuel being emitted as a stream from the outlet, and further means, associated with the outlet, for bifurcating the stream of gases emitted from the outlet into two diverging streams and operable to direct said streams to provide components of thrust on the aircraft parallel to the yaw axis and of opposite sense.

References Cited in the file of this patent

UNITED STATES PATENTS

2,008,464	Nishi	July 16, 1935
2,465,457	Johnston	Mar. 29, 1949
2,468,787	Sharpe	May 3, 1949

FOREIGN PATENTS

680,401	France	Jan. 18, 1930

Dec. 4, 1962 N. C. PRICE 3,066,890

SUPERSONIC AIRCRAFT

Original Filed Jan. 23, 1953 3 Sheets-Sheet 1

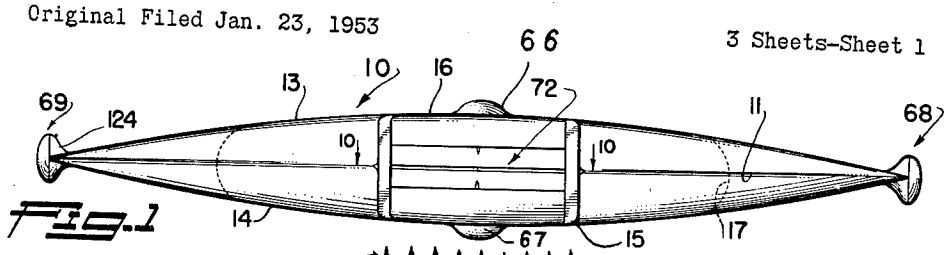

Fig. 1

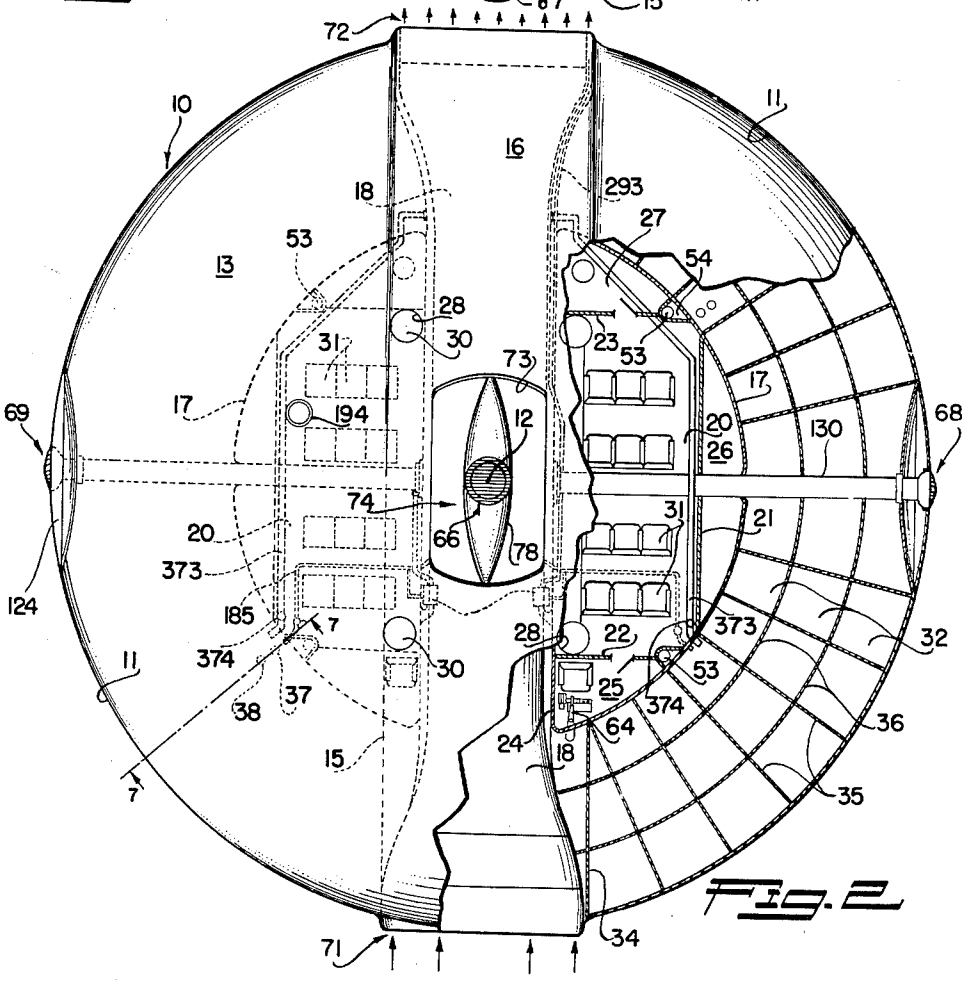

Fig. 2

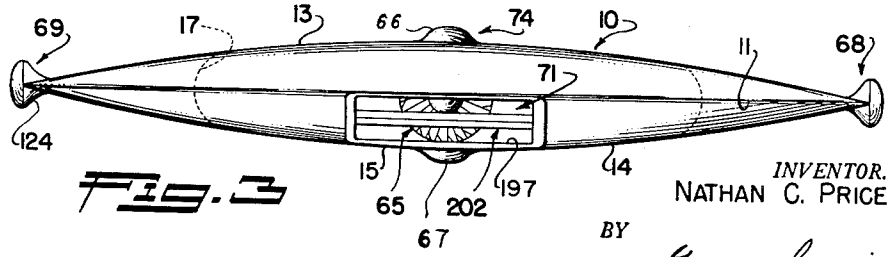

Fig. 3

INVENTOR.
NATHAN C. PRICE

BY

George Sullivan
Agent

Dec. 4, 1962 N. C. PRICE 3,066,890
SUPERSONIC AIRCRAFT
Original Filed Jan. 23, 1953 3 Sheets-Sheet 2

Fig. 4

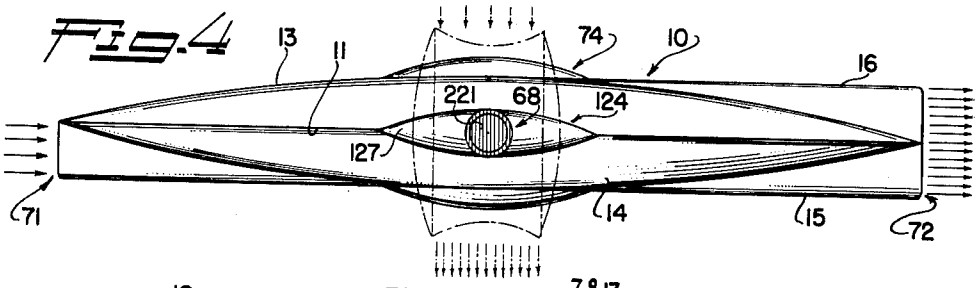

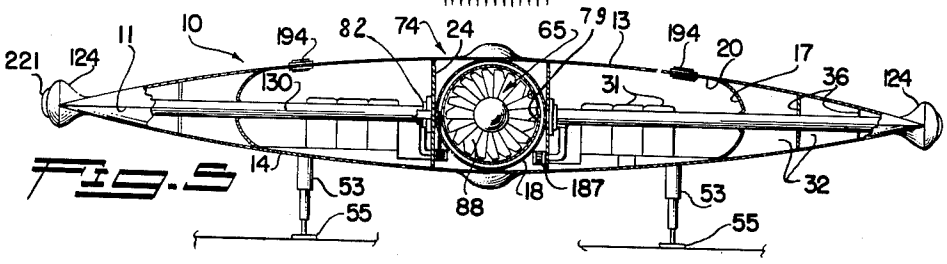

Fig. 5

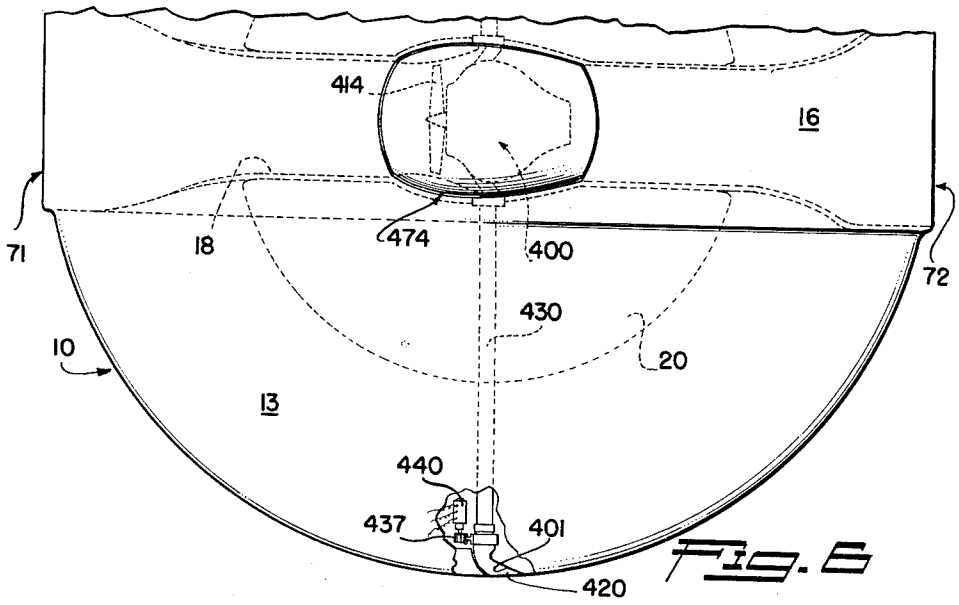

Fig. 6

INVENTOR.
NATHAN C. PRICE
BY
George E. Sullivan
Agent

Dec. 4, 1962 N. C. PRICE 3,066,890

SUPERSONIC AIRCRAFT

Original Filed Jan. 23, 1953 3 Sheets-Sheet 3

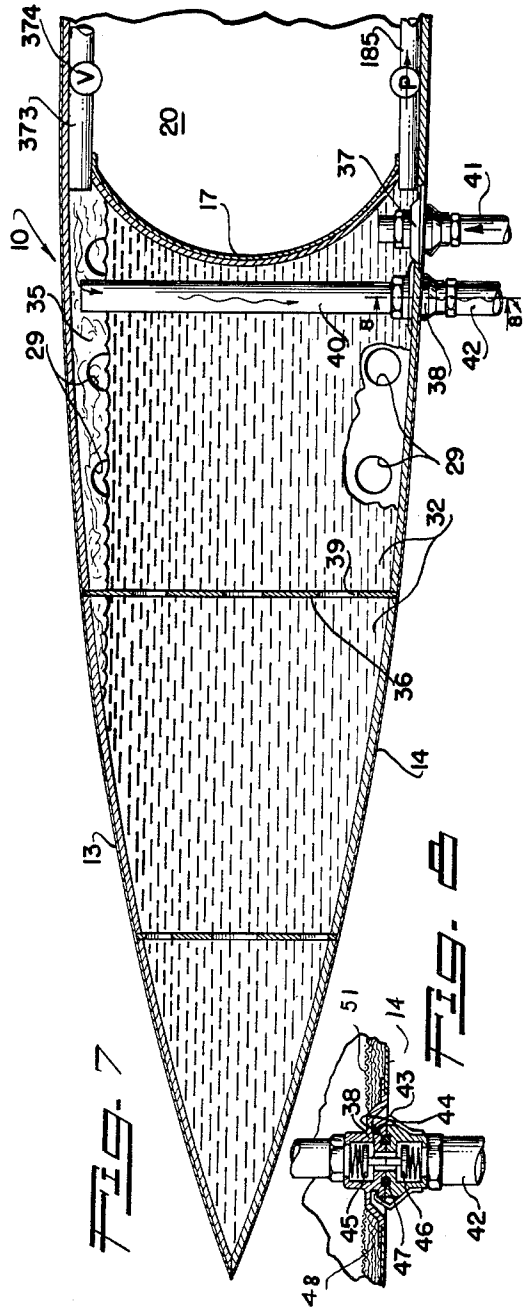

FIG. 7

FIG. 8

INVENTOR.
NATHAN C. PRICE
BY
George C. Sullivan
Agent

184 || @HighEarthOrbit_ linktr.ee/Grider2

United States Patent Office

3,066,890

Patented Dec. 4, 1962

1

3,066,890
SUPERSONIC AIRCRAFT

Nathan C. Price, Mexico City, Mexico, assignor to Lockheed Aircraft Corporation, Burbank, Calif.

Original application Jan. 23, 1953, Ser. No. 332,957. Divided and this application July 1, 1957, Ser. No. 669,369

22 Claims. (Cl. 244—15)

This invention relates to aircraft, and relates more particularly to aircraft capable of vertical ascent and descent during takeoff and landing and of high altitude flight at supersonic velocities. It is a general object of this invention to provide vertical rising and descending aircraft characterized by their unique aerodynamically efficient design and by a propelling system for producing safe, efficient, supersonic, long range flight. The aircraft of the invention is designed not only for vertical ascent and descent to facilitate landing and taking off at small fields or landing areas but also for long range flight at a Mach number of, say, 4, and at altitudes in the region of 100,000 ft.

The application is a division of my copending application Serial Number 332,957, filed January 23, 1953, entitled "High Velocity High Altitude Aircraft."

Another object of the invention is to provide aircraft of circular plan-form and of bi-convex vertical cross section which may be devoid of the conventional fuselage, wings, and empennage. The circular plan-form airplane of the invention has spherical has spherical convex upper and lower skin surfaces constituting the major surface areas of the airplane. This simple structure or design has many inherent advantages and features. It:

(1) Is an inherently rigid, strong structure having greater resistance to bending and torsional moments than other airborne configurations;
(2) Provides for a more uniform weight distribution over the lifting surface than other aircraft configurations;
(3) Allows a more uniform distribution of landing forces into the airplane structure and due to its circular plan-form permits the employment of any selected or required number of landing struts;
(4) Is not subject to flutter or to damage by gusts;
(5) Is structurally efficient in containing internal cabin pressures, fuel and other internal loads by reason of the spherical convex upper and lower skin surfaces joined one to the other at the circular periphery of the craft;
(6) Operates to effectively or uniformly distribute the thermal stresses and deformations resulting from high Mach number flight;
(7) Permits the positioning or concentrating of the useful loads in concentric relation to the center of gravity and geometric center of the structure and the disposition of the fuel loads in balanced or concentric relation to the center of gravity and geometric center;
(8) Is stable during vertical ascent and descent due to its circular plan-form;
(9) Provides a maximum volumetric capacity for the pay loads and fuel;
(10) Is simple and inexpensive to construct owing to its simple regular configuration and because many of its parts may be of like or identical size and shape;
(11) Occupies a minimum of field or floor space when not in flight due to its inherent compactness;
(12) Is inherently aerodynamically efficient, having a good L/D ratio and presents a substantially continuous unbroken peripheral edge (leading and trailing edges) and a smooth profile offering a minimum of skin friction drag; and

2

(13) May land and takeoff from any medium, being stable even on rough water.

These and other considerations and advantages all result from the simple compact circular plan-form airframe of bi-convex cross section.

Another object of the invention is to provide an aircraft of this character having a diametrically extending thin plate airfoil region or portion containing in part the primary propulsive mechanism or means, this thin plate airfoil constituting only a relatively small portion of the total airfoil and yet assisting in producing aerodynamic lift with a minimum of drag.

Another object of the invention is to provide an aircraft of the character above referred to which employs a low boiling point fuel, such as butane or propane as the fuel and refrigerant. Such fuels have approximately 15% more energy value than conventional aircraft fuels but are much less dense, thereby requiring considerably greater tank space or volume. The circular plan-form bi-convex airplane of the invention supplies this necessary fuel storage volume and contains the low boiling point fuel in such a manner that it effectively cools the skin and assists in protecting the passenger and cargo compartments against excessively high temperatures. The low boiling point fuel through vaporization of even only one-third of the total fuel carried absorbs in the neighborhood of 1 million B.t.u. per hour, thereby bringing the skin temperatures into equilibrium at a substantially lower value. Thus the configuration of the airframe or body and the type of propulsive fuel and its mode of storage mutually contribute to the cooling of the skin and provide storage regions of ample volume for the low density fuel.

Another object is to provide aircraft of this kind having a safe dependable propulsive system wherein operational failure of certain of its components will not endanger the craft or its occupants. The load turbines which incorporate the high velocity rotors of the system are so positioned that the planes of rotation of these rotors do not in any instance intersect the passenger compartment or vital portions of the craft while in translational flight. Accordingly, failure or bursting of a rotor will not endanger the occupants of the craft.

Another object of the invention is to provide an aircraft of this kind wherein the variable inlet and the controllable outlet or nozzle of the main duct are generally rectangular and are elongated spanwise of the circular craft to best conform with its thin periphery. The elongated inlet and outlet contribute to the desirable thin central airfoil region and reduce wake losses. The main propulsive duct is diametric of the circular airfoil or body so that there is ample length for the propulsive mechanism in the circumference of the body and therefore no need to extend or project either the ram inlet or the nozzle from the periphery of the circular craft.

A further object is to provide a circular plan-form aircraft as described characterized by the bi-convex skin surfaces capable of carrying substantial internal pressures and by simple yet strong and effective passenger, cargo and fuel compartmentation. The cabin is surrounded by a circular wall or bulkhead extending between the upper and lower convex skin structures, this bulkhead together with the skin structures providing or constituting the fuel tanks or compartments and there are circumferentially spaced radial baffles in the fuel compartments secured to the skins and the circular bulkhead. This internal structure, including, of course, minor local stiffening ribs, etc., is so strong and rigid as to readily withstand all aerodynamically induced vibration forces as well as all other operational loads and forces.

Other objectives and features will become apparent

185 || @HighEarthOrbit_ linktr.ee/Grider2

from the following detailed description of typical preferred embodiments of the invention throughout which reference will be made to the accompanying drawings, wherein:

FIGURE 1 is a rear elevational view of an aircraft of the invention;

FIGURE 2 is a plan view of the aircraft with a portion broken away to illustrate the internal structure;

FIGURE 3 is a front elevation of the craft;

FIGURE 4 is an edge or side elevation of the craft with broken lines illustrating the propulsive island in a vertical position to produce vertical thrust for ascent or descent;

FIGURE 5 is a transverse sectional view taken substantially as indicated by line 5—5 on FIGURE 2 and illustrating the landing struts and the tip portions in elevation;

FIGURE 6 is a fragmentary plan view of another aircraft of the invention with a portion broken away to illustrate one of the tip nozzles;

FIGURE 7 is an enlarged fragmentary vertical sectional view taken as indicated by lines 7—7 on FIGURE 2 showing one of the fuel compartments and a portion of the fueling means; and

FIGURE 8 is an enlarged fragmentary sectional view taken as indicated by line 8—8 on FIGURE 7.

The aircraft of the invention as illustrated in FIGURES 1 through 5, 7 and 8, includes an airframe, airfoil or body 10, which I will usually hereinafter refer to as the body, of circular plan-form. As best illustrated in FIGURE 2, the body 10 has a periphery 11 which is preferably concentric with an axis 12 which may constitute the center of gravity and the geometric center of the airplane. This periphery 11 is continuous and unbroken except for minor interruptions at the inlet and outlets of the propulsive system, to be subsequently described, and as seen in FIGURES 1, 3, 4 and 5, it is quite sharp to have good aerodynamic characteristics and to minimize the frontal area of the craft. In accordance with the invention the upper and lower surfaces or skins 13 and 14 of the airplane are convex and are preferably spherically convex, being in the nature of two like opposing spheroidal segments having their bases or chords coincident and joining at the plane of the peripheral edge 11. These spherical convex surfaces or skins 13 and 14 are smooth and regular to offer a minimum of drag and join at the circumferential edge 11 (leading and trailing edge) which itself is sharp and aerodynamically efficient. As briefly mentioned above, the body 10 has a diametric airfoil-rear region which is defined by a rather broad yet shallow rib portion 15 extending completely diametrically across the underside of the body 10 and a similar shallow rib portion 16 at the upper side of the body extending from adjacent the center thereof to its trailing edge. The lower side of the lower rib portion 15 is flat and substantially parallel with the plane occupied by the peripheral edge 11 and in a like manner the surface of the upper rib portion 16 is flat and parallel with the same plane. The primary purpose of the rib portion is to provide ample space within the aircraft for elements of the propulsive system, to be later described, although the rib portion constitutes a thin plate airfoil which assists in providing aerodynamic lift for the airplane. In practice, the rib portions 15 and 16 need not be very thick and may die into the contours of the skins 14 and 13 adjacent the center of the craft. The sides or edges of the rib portions 15 and 16, which extend chord-wise of the body 10, are faired into the skins 14 and 13 respectively. However, where the portions 15 and 16 extend fore and aft along the fore and aft axis of the craft, they constitute a rib which serves as a vertical stabilizer for the airplane. The surfaces or skins 13 and 14, the skins of the rib portions 15 and 16, the peripheral edge 11, and other exposed parts of the airplane such as fairings, etc. are preferably constructed of

stainless steel or other material capable of retaining adequate strength when subjected to the high temperatures developed during the multi-Mach number flight program.

The airframe 10, as just described, is inherently capable by reason of its geometrical configuration of withstanding heavy stresses and loads and the invention provides a simple yet strong internal structure for reinforcing the airframe and for assuming major structural and functional loads. A pressure bulkhead 17, curved in both plan-form and radial planes is provided in the body 10 and extends between and is secured to the upper and lower skins 13 and 14. The bulkhead 17 is concentric with the axis 12 and may be substantially vertical. A large diametered propulsive air duct 18 extends diametrically through the body 10 and intersects the circular bulkhead 17 to divide the space encircled thereby into two main passenger and/or cargo compartments 20. The duct 18, which will later be described in connection with the propulsive system, extends fore and aft and is coaxial with the rib portions 15 and 16 above described. As the duct 18 interrupts the bulkhead 17 and divides the bulkhead into two sections, there are walls 24 adjacent to and parallel with the duct for connecting the ends of their respective partially circular bulkhead portions. The main compartments 20 which may or may not be interconnecting depending upon the relative diameter of the air duct 18, are shown in the drawings as passenger compartments, being provided with rows of aft facing seats 31. The compartments 20 may, in practice, be defined by portions of the above mentioned walls 24 and by partitions 21, 22 and 23. The bulkheads or partitions 21, 22 and 23, together with the walls 24, define generally rectangular passenger compartments 20 and as the bulkhead 17 is circular, marginal compartments 25, 26 and 27 remain forward, aft and outboard of the main compartments.

The forward compartments 25 may constitute the pilot and crew areas, the outboard compartments 26 may be used to carry luggage, mail, cargo, etc. and the aft compartments 27 may be restrooms or toilets. The various compartments, just described, may be interconnecting. Entrances or hatchways 28 in the upper and lower skins 13 and 14 lead to the main compartments 20 and are equipped with sealed hatches or closures 30 capable of withstanding substantial pressure differentials. The various partitions and walls and particularly the bulkhead 17 and its wall portions 24 may be structural load assuming elements secured to one another and to the skins 13 and 14 to constitute a strong internal assembly or structure.

As briefly noted above, the regions or areas of the circular plan-form bi-convex body 10 around the passenger and load carrying compartments serve as fuel tanks or fuel cells which I have designated 32. The fuel tanks or cells 32 are bounded or defined by the skins 13 and 14, the bulkhead 17 and chord-wise walls or bulkheads 34 extending from the bulkhead 17 to the periphery 11 adjacent and generally parallel to the main air duct 18. I prefer to provide the fuel cells 32 with multiplicities of circumferentially spaced radially disposed internal baffles or bulkheads 35 and spaced circumferential or circular bulkheads 36. These bulkheads 35 and 36 which extend between the skins 13 and 14 and which are attached to the skins materially increase the strength and rigidity of the structure. The bulkheads 35 and 36 are perforated, having openings 29 and 39 respectively (see FIGURE 7), so that the various regions or areas of the individual fuel cells 32 are in communication. It is to be noted that the fuel in the cells 32 is in heat absorbing or heat transfer relation to the major portions of the skins 13 and 14 and the bulkhead 17 and thus serves as a refrigerant to reduce the temperature of the skins and to protect the passenger and cargo compartments 20, 25, 26 and 27 against excessively high temperatures. The cooling or refrigerating action of the fuel and the refrigerating system will be more fully described hereinafter.

186 || @HighEarthOrbit_ linktr.ee/Grider2

Special provision is made to supply or fill the fuel cells 32 with the low pressure fuel. Because butane, propane, and like fuels vaporize readily at normal ground temperatures, it is necessary to continuously withdraw vaporized fuel from the cells or tanks 32 as the cells are filled with liquid fuel and until the craft takes off. For this purpose the lower wall or skin 14 of each fuel cells 32 has two fuel conduits or fittings 37 and 38 (see FIGURE 7 and 8), the fitting 37 serving to discharge liquid fuel into the cell and the fitting 38 being adapted to bleed off fuel vapor from its respective cell. The fittings 38 have stand pipes 40 extending upwardly to adjacent the tops of the cells 32 to receive the fuel vapor. When refueling the airplane and until ascent has been initiated, pipes or hoses 41 are connected with the fittings 37 to supply liquid fuel to the cells and similar hoses 42 are connected with the fittings 38 to draw or carry away the fuel vapor. The fittings 37 and their related hoses 41 and the fittings 38 and their related hoses 42 may have identical detachable connections and valve means and while I will specifically describe the detachable connections and the valve means of the fittings 38 and their pipes or hoses 42, it is to be understood that this description is equally applicable to the corresponding connections and valve means of the fittings 37 and their pipes 41. As shown in FIGURE 8, the hoses or pipes 42 have spring clips 43, or the equivalent, detachably engaged with shoulders 44 on the fittings 38 to hold them in communicating connection with the fittings. Seal rings 47 are engaged between the fittings 38 and the hoses or pipes 42 to prevent the leakage of the vapor or fuel. The fittings 38 and the hoses or pipes 42 have opposing poppet valves 45 and 46, respectively, spring urged to closed positions. The relationship of the valves 45 and 46 is such that so long as the pipes 42 remain coupled with the fittings 38 the valves cooperate with one another to be held in the open positions where the fuel vapor is free to flow out through the hoses or pipes 42. The pipes 42 are connected with an absorption pump (not shown) for drawing away the fuel vapor and the hoses or pipes 42 are connected with a source or sources of the liquid fuel under pressure so as to deliver the liquid fuel to the cells 32 of the airplane. Preparatory to takeoff and so long as the aircraft remains on the ground or field, liquid fuel is pumped in through the hoses or pipes 41 and the vaporized fuel is withdrawn through the hoses or pipes 42. When the aircraft rises vertically from the field or ground, the spring clips 43 snap out of engagement with their shoulders 44 allowing the fittings 37 and 38 to move upwardly out of engagement with their respective pipes 41 and 42. When this occurs the valves 45 and 46 automatically close to retain the liquid fuel and the vaporized fuel within the fuel cells 32 of the airplane and to avoid the spilling or leakage of the fuel from the hoses or pipes 41 and 42.

It is to be observed that the circular plan-form biconvex aircraft body 10 provided with the partly circular fuel cells 32 has a large aggregate volumetric fuel storage capacity. This well adapts the craft for the utilization of butane or propane which have approximately 15% greater energy value than conventional aircraft fuels on a weight basis but are far less dense and, therefore, require large capacity storage space for comparable ranges of flight. By making the bulkhead 17 of less diameter the fuel capacity of the cells 32 may be greatly increased to extend the operational range of the craft. This is indicated and practical in the case of military craft where the personnel and the payload areas or compartments may be quite small. Furthermore, for military craft it may be desirable to use liquid hydrogen as the propulsive fuel to materially extend the operational range. Liquid hydrogen has a very low density (.086) with a boiling point density of 0.070 and on a volume per heat content basis requires approximately three times as much space as gasoline. However, for pilotless military aircraft and military aircraft carrying one or two men, the body 10 is such that it may be readily compartmented to contain ample liquid hydrogen as its fuel for a non-stop flight of, say, 7,500 miles. Such liquid hydrogen could well be supplied to or pumped into the fuel cells 32 in the same manner as the other fuels.

The lower boiling points fuels are especially well adapted for cooling the passenger and payload compartments and other critical regions of the aircraft and greatly reduce the temperature of the skin. Butane has a boiling point under 33° F. and propane has a boiling point of —45° F. Such fuels and the vapor therefrom in contact with the inner surfaces of the skins 13 and 14 prevent the skins from being excessively heated by the aerodynamically induced heat. Assuming the body 10 has a diameter of 50 ft. and that the craft is operated at a speed of Mach number 4 at an altitude of 100,000 ft. it is calculated that the temperature of the skins unless provision is made for cooling it, would reach 1139° F. However, the skins 13 and 14 preferably has their outer surfaces chemically oxidized black, or otherwise treated, or coated to have a heat emissivity of approximately 0.95. This high emissivity will result in radiation of a substantial amount of heat energy into space. Although the emissivity of a surface is numerically equal to its absorptivity there is a distinct and novel advantage in providing the skins 13 and 14 of the airplane of this invention with external surfaces having high emissivity. The heat input to the skins 13 and 14 as a result of the frictional drag and the airplane speed is considerable. On the other hand, solar radiation will tend to increase the skin temperature to only a very minor extent. It is estimated that the aerodynamically induced heat input to the skin will be approximately thirty times as much as the heat induced by solar radiation. Accordingly, the skin surfaces of high emissivity and correspondingly high absorptivity have the net effect of emitting many times as much heat energy as they are capable of absorbing and the surfaces of high emissivity function as effective heat dissipating elements of the cooling or refrigerating means of the invention. Additionally, the heat energy required to vaporize approximately 30% of the low boiling point fuel during the flight program is substantial, being in the neighborhood of 1 million B.t.u. per hour under the above assumed conditions. Thus it is calculated that the skin temperatures under the above conditions will come into equilibrium at about 940° F. The stainless steel skins 14 and 13 maintain their structural integrity at such a temperature and the internal structure adjacent thereto is not adversely affected at such a temperature. The material reduction in the temperature of the skins of the aircraft has the effect of increasing the efficiency and range of the craft. The reduction in skin temperature proportionately reduces the viscosity of the boundary layer air and therefore increases the aerodynamic efficiency of the circular plan-form biconvex airfoil or craft.

The invention provides effective thermal insulation at the inner surfaces of the skins 13 and 14 at the bulkheads 17, walls 24, bulkheads 34, and other walls, bulkheads, etc. where necessary or desirable to thermally insulate the internal structure and the passenger and payload areas of the aircraft, it being observed that the fuel cells 32 containing the low boiling point fuel and its vapor substantially surround the passenger and payload compartments 20, 25, 26 and 27. The fuel cells 32 and their contents thus form effective thermal barriers protecting the passenger and payload regions. FIGURE 8 shows a form of insulation that may be used on the skins 13 and 14 and the several bulkheads, walls, etc. The insulation, as illustrated, is provided on the inner surface of the skin 14, is being understood that it is equally applicable to the other insulated areas and regions. The insulation includes "Alfoil" blankets 48 which are comprised of pluralities of corrugated or crinkled aluminum or other metal foil sheets arranged and related so that there are multiplicities of air spaces betwen the adjacent foil sheets. Such

187 || @HighEarthOrbit_ linktr.ee/Grider2

insulation has a very low apparent density and a low k factor and is therefore well adapted for this application. However, other appropriate thermal insulation or insulating materials may be use if desired. The blankets 48 of metal foil are engaged on or fixed to the inner side of the skin 14. In order to retain the rather loosely arranged blankets 48, I provide metal mesh, screens or the like, 51 to extend across the blankets 48. Immersion of this type of insulation, either temporarily or permanently, in the fuel and/or fuel vapor of the cells 32 does not impair the insulating qualities although it may alter the k factor while the insulation is immersed, depending upon the proportion of fuel vapor between the layers. The foil of the insulating blankets 48 is preferably polished or bright to be most efficient in reflecting radiant energy under practically all conditions.

In accordance with the broader aspects of my invention any suitable or selected type of alighting or landing gear may be employed. In the drawings, and more particularly in FIGURES 2 and 5, I have shown a plurality of spaced generally vertical shock absorbing struts 53 projectable from the underside of the body 10. The retractable struts 53 may be of the oleo type and are preferably arranged for vertical retraction into relatively small spaces or compartments 54 at the bulkhead 17 and adjacent the adjoining corners of the above described compartments 20, 26 and 27. In this connection it is to be observed that the landing gear struts 53 may readily be anchored or attached to the body 10 at regions where the landing loads may be transmitted directly to the strong rigid internal structure of the craft and that by reason of the circular configuration of the body 10 and the circular arrangement of its bulkhead 17 and other structural parts any selected or required number of the struts 53 may be installed in practically any required pattern or relationship. The lower ends of the landing struts 53 may be equipped with wheels, pads, or the like. In the drawings I have shown pads 55 on the struts 53 of such a nature that they may lie substantially flush with the surfaces of the lower skin 14, when the struts are retracted, so as to offer little or no aerodynamic drag.

It is contemplated that translational flight will usually be at such great altitude that visual observation by the passengers will be of minor consequence and there is no real necessity for the provision of windows, or the like, in the passenger compartment 20. It is also contemplated that the flight of the craft will be controlled by a remotely controlled automatic pilot means thus reducing the flight personnel to a minimum. However, to facilitate pilot controlled landings, maneuvers during emergencies, etc. either one or both of the pilot compartments 25 is provided with a periscope 64, shown in a general way in FIGURE 2.

The propulsive system of the aircraft illustrated in FIGURES 1 to 5 inclusive may be said to comprise, generally, a ducted compressor 65 capable of angular adjustment or movement to produce vertical lift and translational propulsion, upper and lower load turbo powerplants 66 and 67 for driving the compressor 65 and for producing propulsive and directional thrust, a variable ram or air inlet 71 for the ducted compressor 65 and ram jet means 70, a variable area and directional outlet or propulsive nozzle 72 for the ducted compressor and ram jet means, and various other parts and mechanisms associated with these primary propulsive elements.

The ducted compressor 65 is preferably located at or adjacent the geometric center of the circular planform airframe or body 10 and is pivotally mounted to be movable about a spanwise and preferably diametric axis so as to be turned to a vertical or generally vertical position during the vertical ascent and descent of the craft and to be brought to a position coaxial with the abovementioned fore and aft duct 18 and during translational flight of the craft. The main air duct 18 extends diametrically through the circular body 10, as above described, and is provided at its forward end with the variable area inlet 71 and at its aft end with the variable area and directional nozzle 72. The major portion of the duct 18 is preferably cylindrical although its end portions are horizontally elongated, as will be more fully described in connection with the inlet 71 and the outlet or nozzle 72. The airframe or body 10 has a central vertical opening 73 which intersects the duct 18 and the propulsive compressor 65 is housed or carried in a structure 74 which I will term an "island." This island 74 is journaled at the vertical opening 73 to be movable or turnable therein about a horizontal spanwise axis. The island 74 may be a generally rectangular structure to fit between the walls 24 of the compartments 20 with suitable clearance, and has upper and lower walls which are generally flush with the upper and lower sides of the rib portions 15 and 16 of the body 10 when the island is in the horizontal position. The island 74 is tubular or provided with a through duct 79 to register with, and in effect form a part of, the propulsive duct 18 when the island is in the generally horizontal position.

The island 74 is supported for angular movement about the spanwise axis on tubular trunnions 82 projecting from the opposite sides of the island and journaled on the walls 24. The trunnions 82 are tubular for the reasons to be later described. The ducted compressor 65 is of the supersonic class insofar as the relative velocity of entrained air against the blading is concerned and carries a row of supersonic blades 88. The supersonic compressor 65 is adjacent and slightly forward of the axis of angular movement of the island 74 and the geometric center of the airframe or body 10.

In order to facilitate a better understanding of the invention the following data is given of a typical installation or embodiment wherein the airframe or body 10 is assumed to be 50 ft. in diameter and the craft is assumed to have a gross loaded weight of about 55,000 pounds. In such a case the diameter of the ducted compressor 65 will be 6 ft. and the speed of rotation of the compression rotor will not exceed 3700 r.p.m., which is equivalent to the comparatively conservative top speed of 1200 feet per second, precluding the possibility of the rotor bursting. The compression ratio of the ducted compressor 65 will be 1.89 to 1 and the total weight flow of air through the ducts will be 770 pounds per second. It is to be understood that these figures are merely illustrative and, of course, will vary in different applications and aircraft.

The load turbo powerplants 66 and 67 serve to assist in driving or rotating the ducted compressor 65 and themselves produce propulsive gas streams or jets. The powerplants 66 and 67 are provided or arranged at a vertical axis which intersects the axis of rotation of the ducted compressor at or adjacent the geometric center 12 of the craft. The powerplants 66 and 67 are carried by the island 74 and are arranged on the upper and lower sides respectively of the island, assuming the island to be in the full line position illustrated throughout the drawings. The powerplants 66 and 67 are supercharged by the ducted compressor 65 and serve to drive the compressor through a transmission means as described in my application Serial Number 332,957, identified above, which describes and claims the propulsive system or means of the airplane including the island 74, the propulsive means carried by the island, the means for moving the island between the full line and broken line positions of FIGURES 4 and 5, the fuel supply and burner means and the other elements of the overall propulsion system.

The tip or outboard powerplants 68 and 69, which are fully described in my application Serial Number 332,957, are provided to assist in driving the ducted compressor 65, to produce propulsive jets, and they are controllable to provide for or to assist in the steering or

188 || @HighEarthOrbit_ linktr.ee/Grider2

directional control of the craft. The turbo jet load powerplants 68 and 69 are positioned on the periphery of the circular plan-form airframe or body 10 on a common diametric axis which intersects the axis of rotation of the ducted compressor 65 and the longitudinal axis of the ducts 18 and 79 at or adjacent the geometric center 12 of the body 10. In the aircraft illustrated where the periphery of the body 10 is sharp or thin, I provide streamlined enlargements or pods 124 at the outboard edges or "tips" of the body to contain the powerplants 68 and 69 and their auxiliaries and controls. These pods 124 may be designed or shaped to reduce the vortices losses at the margins or tips of the craft.

Like the inboard load powerplants 66 and 67, the outboard or tip turbo powerplants 68 and 69 are supercharged by the ducted compressor 65, receiving compressed air from the compressor and further compressing it before it reaches their respective combustion zones. Tunnels or tubes 130 of substantial capacity which extend radially outward through the compartments 20 and 21 and the fuel cells 32 conduct the compressed air from the compressor to the outboard powerplants 68 and 69. The powerplants 68 and 69 are carried for angular movement about a spanwise or diametric axis which intersects the fore and aft axis of the body 10 at the geometric center 12 of the body. The tip or outboard turbo load powerplants 68 and 69 are drivingly connected with the ducted compressor by shafts (not shown) extending outwardly through the tubes 130 and drivingly connected with the compressor by a transmission means.

The load turbo powerplants 66, 67, 68 and 69 are arranged and located in such a fashion that explosion or bursting of any of them during flight will not endanger the occupants or any critical portions of the craft, the rotors of the powerplants 66 and 67 being arranged to rotate in planes parallel with and spaced above and below the airframe proper and remote from the passenger compartments and fuel cells 32 and the rotors of the outboard load powerplants 68 and 69 being arranged to rotate in planes far remote from and parallel with the side walls 24 of the occupied compartments and outboard from the fuel cells 32 and the periphery of the airframe.

As mentioned above, the island 74 carrying the ducted compressor 65 is pivotally movable about the spanwise axis of the airframe or body 10 between the position when its air duct 79 is aligned with and in register with the main air duct 18 of the body 10 for translational flight and the position where the island duct 79 is vertical or substantially normal to the duct 18 for generally vertical takeoff and landing.

The present specification is not primarily concerned with the details of the propulsive system such as the means for moving the island 74, the controls and fuel systems for the powerplants 66, 67, 68 and 69, the fuel injector or combustor means for introducing fuel downstream from the compressor 65, the means for controlling or directing the jet streams from the powerplants 68 and 69, and like features, since these and the other elements of the propulsive system are fully described in my copending application Serial Number 332,957. However, it may be noted that fuel or fuel vapor is led from the upper portions of the fuel cells by pipes 373 for consumption by the propulsive system. These pipes 373, which are controlled by valves 374, extend along the walls of the passenger compartments 20 so that the fuel vapor assists in refrigerating the compartments. Other pipes 185, lead from the lower portions of the fuel cells to the propulsive system or propulsive components.

The inlet 71 of the main propulsive air duct 18 is in the nature of a supersonic variable ram inlet. The forward or inlet end portion of the duct 18 is elongated in the spanwise direction, the forward portion of the duct flaring forwardly and spanwise while at the same time being reduced in its vertical dimension to terminate at a rectangular forward opening 197, see FIGURES 2 and 3. The opening 197 is in the lower rib portion 15 being below the periphery 11 of the body 10, and has generally straight horizontal and vertical margins at its forward terminus. It should be noted that the elongate entrance of the opening 97 conforms generally with the thin forward edge or periphery of the body 10 to keep the frontal area of the craft at a minimum. The ram inlet 71 is of variable area, having an island 202 of variable volume or variable cross section. The main propulsive jet nozzle 72 at the aft end of the main duct 18 automatically changes from a subsonic nozzle to a supersonic nozzle and vice versa in accordance with the flow conditions of the discharging air and gas jet, incorporates variable direction features to obtain pitching trim, and is operable as an air brake to reduce the velocity of flight under certain conditions. The variable area inlet 71 and the variable propulsive nozzle 72 are more fully described in my copending application Serial Number 332,957, identified above.

FIGURE 6 illustrates another aircraft of the invention characterized by turbo-propeller powerplant 400 serving as the primary propulsive means. In this aircraft the body 10, the duct 18, the ram inlet 71, the propulsive nozzle 72, and the various other parts may be the same as in the above described embodiment of the invention. The central island 474 is substantially the same as the island 74, however, it is shaped and proportioned to contain the powerplant 400. The island 474 is arranged to be turned or pivoted on the spanwise axis of the body 10 and the trunnions or means for pivotally supporting the island also serve to supply compressed air from the powerplant to lateral ducts 430 which carry the air outboard to directional nozzles 420. These nozzles 420, which are movable in curved slots 401 in the periphery of the body 10, are rotated or pivoted by reversible electric motors 440 acting through suitable rack and pinion means 437 associated with the nozzles. The powerplant 400 may be of the type disclosed in my earlier Patents 2,563,270 issued August 7, 1951, and 2,575,682 issued November 20, 1951. The powerplant 400 has a propeller or compressor means 414 in the tubular island 474 and is a turbo-powerplant serving to drive the compressor means and to discharge a propulsive jet rearwardly through the duct 18. The propeller or compressor means 414 serves to compress air in the duct system to supercharge the turbo engine and to increase the pressure of the air discharging through the duct 18 and nozzle 72. The rammed air in the duct 18 supercharged or further compressed by the compressor 414 is also directed to the directional propulsive nozzles 420 at the periphery of the body 10. For vertical ascent and descent of the aircraft the island 474 is swung to a vertical position where it discharges the propulsive jet downwardly and the outboard nozzles 420 are likewise turned to face downwardly to produce upward or lifting thrusts. For translational flight the island 474 is brought to the horizontal or normal position where its propulsive jet stream flows aft through the main propulsive duct and the outboard nozzles 420 are also turned to face aft to provide additional forward thrust although these nozzles may be simultaneously and/or differentially adjusted or controlled to assist in directional control of the aircraft.

It is believed that the operation and features of the aircraft of this invention will be apparent from the foregoing description. It will be seen that the circular plan-form-bi-convex aircraft body 10 is a rigid, strong structure particularly resistant to bending and torsional loads. The body 10 being circular permits substantially uniform weight distribution over its lifting surfaces and a good distribution of landing forces. The spherical convex upper and lower surfaces 13 and 14 joined at the circular leading-trailing edge 11 are especially structurally ef-

189 || @HighEarthOrbit_ linktr.ee/Grider2

ficient in carrying the internal loads, the cabin air pressures, and the body 10 being circular allows for the disposition of the useful loads and fuel loads in concentric or balanced relation to the C.G. and geometrical center of the structure. Since the aircraft is devoid of wings, and empennage, etc. and since it has a simple regular configuration so that many of its parts may be similar or identical in size and shape, the body 10 and the overall aircraft is inexpensive to manufacture and maintain. The aircraft is aerodynamically efficient, having an excellent L/D ratio and because it presents a substantially continuous unbroken peripheral edge 11 and a smooth profile, it offers a minimum of skin friction drag. The portions 15 and 16 extending diametrically fore and aft provide a rib which serves as a vertical stabilizer and define a region which contains the main propulsive elements of the aircraft. This diametric fore and aft thin plate airfoil region has the added function of assisting in producing aerodynamic lift with a minimum of drag. It will be observed that the elements of the propulsive system are arranged or located so that their high velocity rotating members will not endanger either the aircraft or its occupants in the event of operational failure. The internal compartmentation of the circular plan-form aircraft, as above described, provides for effective protected passenger compartments as well as extensive cargo and fuel cells or spaces. The circular bulkhead 17, together with the spaced radial dividers or baffles of the outer compartments or fuel compartments are secured together and to the upper and lower skins 13 and 14 to constitute a strong rigid airframe.

Having described only typical forms of the invention I do not wish to be limited to the specific details herein set forth, but wish to reserve to myself any variations or modifications that may appear to those skilled in the art and fall within the scope of the following claims.

I claim:

1. In an aircraft; an aircraft body of circular plan-form having convex spheroidal upper and lower sides and including a fore and aft relatively flat airfoil section substantially diametric and parallel to the direction of horizontal flight.

2. In an aircraft the combination of; an aircraft body of circular plan-form and including a convex spheroidal upper skin, a lower skin, the body having a fore and aft duct substantially diametric and parallel to the direction of horizontal flight extending therethrough, and propulsive means in the duct for propelling the aircraft.

3. In an aircraft the combination of; an aircraft body of circular plan-form and including a convex spheroidal upper skin, a lower skin, the body having a fore and aft propulsive jet duct substantially diametric and parallel to the direction of horizontal flight extending therethrough, propulsive means in the duct, and means carried by the body external of the duct for driving the propulsive means.

4. In an aircraft the combination of; an aircraft body of substantially circular plan-form including a convex upper skin, a lower skin, and a substantially circular marginal edge connecting the skins, fuel consuming propulsion means in the body, circular bulkhead means in the body substantially concentric with said edge and spaced therefrom, the bulkhead means extending between the upper and lower skins and together with the skins defining cells for containing fuel for the propulsion means, said cells being at the outer side of the bulkhead means, and pay load compartments within the circular bulkhead means.

5. In an aircraft the combination of; an aircraft body of substantially circular plan-form including a convex upper skin, a lower skin, and a substantially circular marginal edge connecting the skins, fuel consuming propulsion means in the body, circular bulkhead means in the body substantially concentric with said edge and spaced therefrom, the bulkhead means extending between the upper and lower skins and together with the skins defining cells for containing fuel for the propulsion means, said cells being at the outer side of the bulkhead means, and pay load compartment means defined by the two skins and the inner side of the circular bulkhead means.

6. In an aircraft having fuel consuming propulsion means the combination of; an aircraft body of substantially circular plan-form carrying the propulsion means and including a convex generally spheroidal upper skin, a lower skin, and a substantially circular marginal edge connecting the skins, circular bulkhead means in the body substantially concentric with said edge and spaced therefrom, the bulkhead means extending between the upper and lower skins and together with the skins defining cells for containing fuel for the propulsion means, and spaced reinforcing bulkheads in the cells substantially concentric with said edge and connecting the upper and lower skins.

7. In an aircraft having fuel consuming propulsion means the combination of; an aircraft body of substantially circular plan-form carrying the propulsion means and including upper and lower skins, and a substantially circular marginal edge connecting the skins, circular bulkhead means in the body substantially concentric with said edge and spaced therefrom, the bulkhead means extending between the upper and lower skins and together with the skins defining cells for containing fuel for the propulsion means, said cells being at the outer side of the bulkhead means, and circumferentially spaced bulkheads in the cells extending substantially radially with respect to the axis of curvature of said edge and secured to the upper and lower skins to strengthen the body.

8. In an aircraft having fuel consuming propulsion means the combination of; an aircraft body of substantially circular plan-form carrying the propulsion means and including upper and lower skins, and a substantially circular marginal edge connecting the skins, circular bulkhead means in the body substantially concentric with said edge and spaced therefrom, the bulkhead means extending between the upper and lower skins and together with the skins defining cells for containing fuel for the propulsion means, said cells being at the outer side of the bulkhead means, spaced bulkheads in the cells curved substantially concentric with the axis of curvature of said edge, and spaced bulkheads in the cells extending radially with respect to said axis, the first and second mentioned bulkheads being secured to the skins to strengthen the body.

9. In an aircraft having propulsive means; an aircraft body of circular plan-form and having convex generally spheroidal upper and lower sides, the body including a diametric portion extending fore and aft and presenting generally flat upper and lower external surfaces to constitute a flat airfoil, said diametric portion containing said propulsive means.

10. In an aircraft; an aircraft body of circular plan-form and having convex spheroidal upper and lower sides, the body including a portion extending fore and aft and presenting generally flat upper and lower external surfaces to constitute a flat airfoil, and a propulsive air duct system extending through said portion from the forward end to the aft end of the body.

11. In an aircraft having propulsive means producing a propulsive air stream; an aircraft body of circular plan-form and having convex spheroidal upper and lower sides, the body including a diametric portion extending fore and aft and presenting generally flat upper and lower external surfaces to constitute a flat airfoil, an air duct extending through said portion from the forward end to the aft end of the body to carry said propulsive airstream, and a propulsive nozzle at the aft end of the duct for discharging the stream as a propulsive jet.

12. In an aircraft; an aircraft body of circular plan-form and having convex spheroidal upper and lower sides, the body including a diametric portion extending fore and aft and presenting generally flat upper and lower external sur-

190 || @HighEarthOrbit_ linktr.ee/Grider2

faces to constitute a flat airfoil, an air duct extending through said portion from the forward end to the aft end of the body, a horizontally elongated ram inlet at the forward end of the duct, means for propelling an air stream aft through the duct, and a horizontally elongated propulsive discharge nozzle at the aft end of the duct.

13. In an aircraft the combination of; an aircraft body of circular plan-form having a convex upper side and a lower side, a duct extending fore and aft through the body from its leading edge to its trailing edge, a variable area ram inlet at the forward end of the duct, a variable area propulsive nozzle at the aft end of the duct, and propulsive means in the duct operable to further compress the ram-compressed air flowing aft through the duct.

14. In an aircraft the combination of; an aircraft body of circular plan-form having a convex upper side, a lower side, a duct extending fore and aft through the body from its leading edge to its trailing edge, a variable area ram inlet at the forward end of the duct, a variable area propulsive nozzle at the aft end of the duct, and powerplant means in the duct for adding propulsive energy to the ram-compressed air flowing aft through the duct.

15. In an aircraft the combination of; an aircraft body of circular plan-form having a convex upper side, a lower side, and a straight through duct extending fore and aft through the body from its leading edge to its trailing edge having a variable area propulsive nozzle at its aft end.

16. In an aircraft the combination of; an aircraft body of circular plan-form having a convex upper side, a lower side, a duct extending fore and aft through the body from its leading edge to its trailing edge, a variable area ram inlet at the forward end of the duct, a variable area propulsive nozzle at the aft end of the duct, compressor means operable in the duct to further compress the ram-compressed air flowing therethrough, and turbo-jet engines on the body spaced outboard from the duct for driving the compressor means.

17. In an aircraft the combination of; an aircraft body of circular plan-form having a convex upper side, a lower side, a duct extending fore and aft through the body from its leading edge to its trailing edge, a variable ram inlet at the forward end of the duct, compressor means operable in the duct to further compress the ram-compressed air flowing therethrough, and turbo-jet powerplants on the body above and below the duct for driving the compressor means.

18. In an aircraft the combination of; an aircraft body of circular plan-form having upper and lower sides, a duct extending fore and aft through the body from its leading edge to its trailing edge, a variable area ram inlet at the forward end of the duct, a variable area propulsive nozzle at the aft end of the duct, means operable in the duct to further compress the ram-compressed air flowing therethrough, and engines on the outboard margins of the circular body for driving said means.

19. In an aircraft; an aircraft body of circular plan-form having convex upper and lower skins, a propulsive air duct extending fore and aft through the medial region of the body having a ram inlet at its forward end and a propulsive nozzle at its aft end, a circular bulkhead in the body extending between and connected with the skins to reinforce the body, the bulkhead defining the outer walls of central region passenger compartments, there being storage compartments in the body between its periphery and the bulkhead.

20. An aircraft including an aircraft body of substantially circular plan-form and having upper and lower sides, bulkhead means in the body curved about the central vertical axis of the body and extending between its upper and lower sides, passenger and payload compartments within the bulkhead means, a propulsive ram air duct extending fore and aft through the body having a ram inlet at its forward end and a propulsive nozzle at its aft end, a relatively low velocity propulsive means operable in the duct, and powerplants in the body spaced above and below the duct for driving the propulsive means, said powerplants being in planes spaced above and below the plane of said compartments.

21. In an aircraft; an aircraft body of circular plan-form having upper and lower skins, a propulsive air duct extending fore and aft through the medial region of the body having a ram inlet at its forward end and a propulsive nozzle at its aft end, and a circular bulkhead in the body extending between and connected with the skins to reinforce the body, the bulkhead defining the outer walls of central region passenger compartments, there being storage compartments in the body between its periphery and the bulkhead, the bulkhead being arcuate in vertical cross section and arranged with its convex side facing toward the periphery of the circular body.

22. In an aircraft the combination of; an aircraft body of substantially circular plan-form having convex upper and lower surfaces, bulkhead means in the body defining large volume storage compartments in the major peripheral regions of the body for containing low boiling point fuel and also defining passenger compartments in the central region of the body encircled by the storage compartments to be protected against aerodynamically induced high temperatures by the stored fuel, and a propulsive system for propelling the craft consuming said fuel.

References Cited in the file of this patent

UNITED STATES PATENTS

1,585,281	Craddock	May 18, 1926
1,957,896	Marguglio	May 8, 1934
2,377,835	Weygers	June 5, 1945
2,384,893	Crook	Sept. 18, 1945
2,397,184	Klose	Mar. 26, 1948
2,563,270	Price	Aug. 7, 1951
2,567,392	Naught	Sept. 11, 1951
2,575,682	Price	Nov. 20, 1951
2,619,302	Loedding	Nov. 25, 1952
2,718,364	Crabtree	Sept. 20, 1955
2,726,671	Zand et al.	Dec. 13, 1955
2,730,311	Doak	Jan. 10, 1956
2,772,057	Fischer	Nov. 27, 1956
2,807,428	Wibault	Sept. 24, 1957

FOREIGN PATENTS

1,047,657	France	Apr. 19, 1950
547,021	Italy	Aug. 6, 1956
50,033	France (Addition to 799,655)	Aug. 1, 1939

OTHER REFERENCES

Western Aviation Magazine, September 1956, pages 9 and 10.

Dec. 4, 1962 N. C. PRICE 3,066,890

SUPERSONIC AIRCRAFT

Original Filed Jan. 23, 1953 3 Sheets-Sheet 1

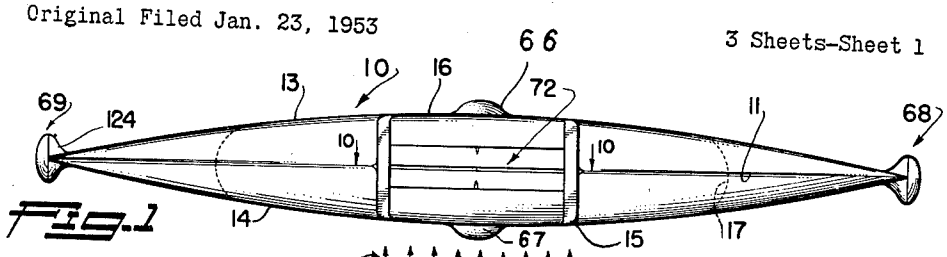

Fig. 1

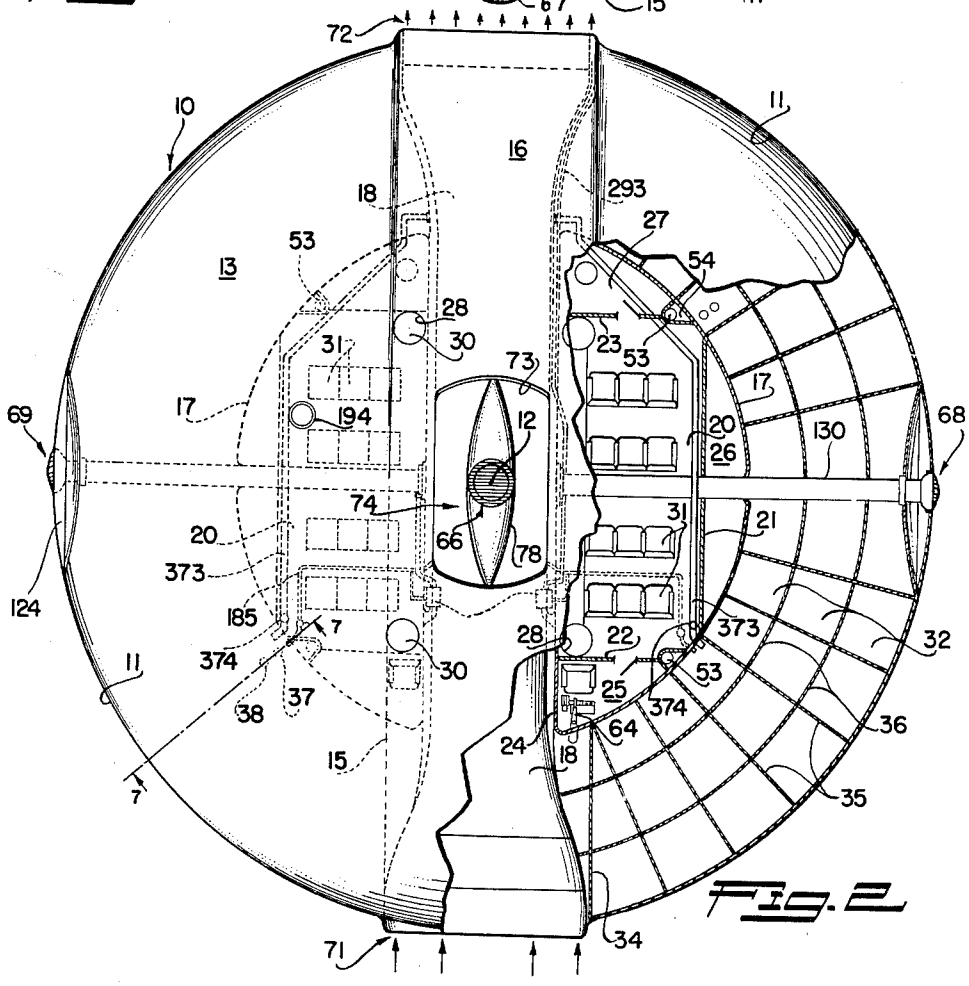

Fig. 2

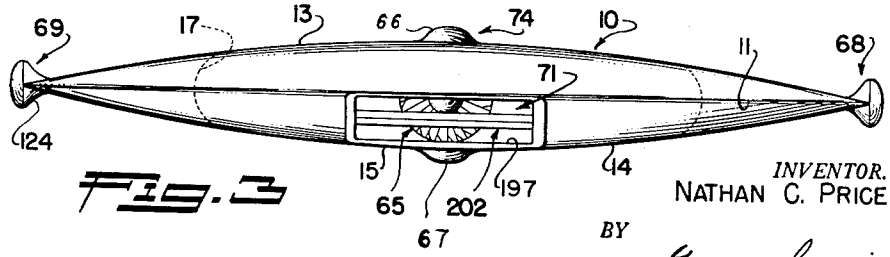

Fig. 3

INVENTOR.
NATHAN C. PRICE

BY

George Sullivan
Agent

Dec. 4, 1962 N. C. PRICE 3,066,890
SUPERSONIC AIRCRAFT
Original Filed Jan. 23, 1953 3 Sheets-Sheet 2

Fig. 4

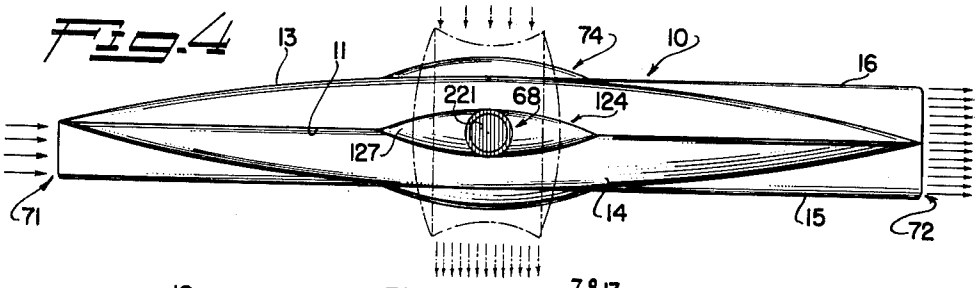

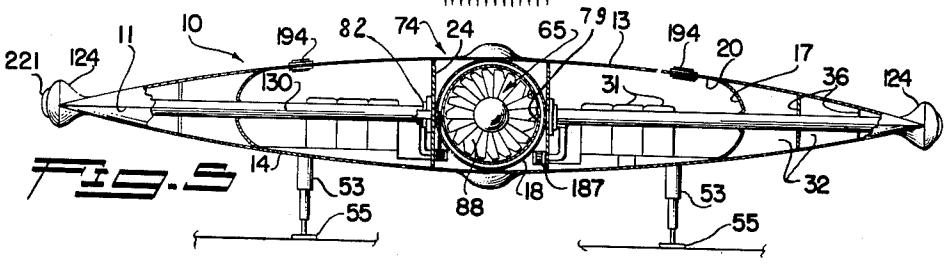

Fig. 5

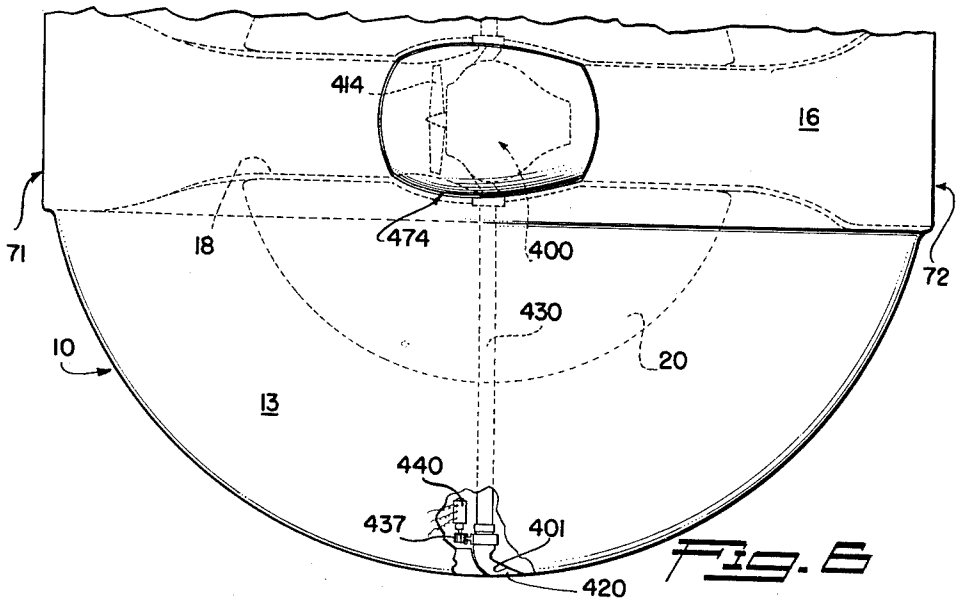

Fig. 6

INVENTOR.
NATHAN C. PRICE
BY
George E. Sullivan
Agent

193 || @HighEarthOrbit_ linktr.ee/Grider2

Dec. 4, 1962 N. C. PRICE 3,066,890

SUPERSONIC AIRCRAFT

Original Filed Jan. 23, 1953 3 Sheets-Sheet 3

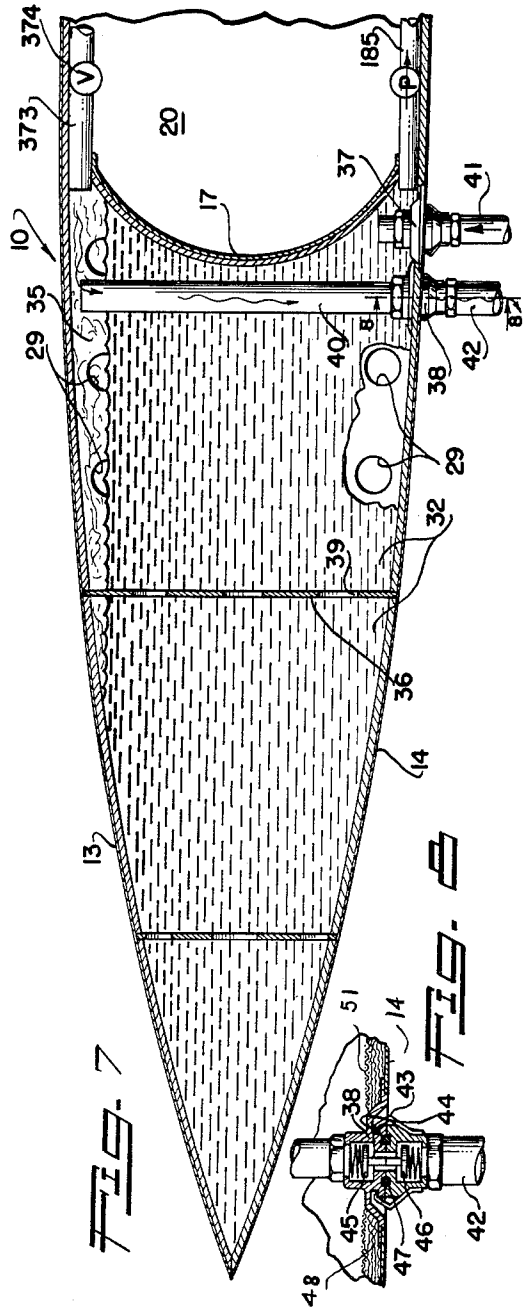

FIG. 7

FIG. 8

INVENTOR.
NATHAN C. PRICE
BY
George C. Sullivan
Agent

194 || @HighEarthOrbit_ linktr.ee/Grider2

United States Patent Office

3,066,890

Patented Dec. 4, 1962

1

3,066,890
SUPERSONIC AIRCRAFT

Nathan C. Price, Mexico City, Mexico, assignor to Lockheed Aircraft Corporation, Burbank, Calif.

Original application Jan. 23, 1953, Ser. No. 332,957. Divided and this application July 1, 1957, Ser. No. 669,369

22 Claims. (Cl. 244—15)

This invention relates to aircraft, and relates more particularly to aircraft capable of vertical ascent and descent during takeoff and landing and of high altitude flight at supersonic velocities. It is a general object of this invention to provide vertical rising and descending aircraft characterized by their unique aerodynamically efficient design and by a propelling system for producing safe, efficient, supersonic, long range flight. The aircraft of the invention is designed not only for vertical ascent and descent to facilitate landing and taking off at small fields or landing areas but also for long range flight at a Mach number of, say, 4, and at altitudes in the region of 100,000 ft.

The application is a division of my copending application Serial Number 332,957, filed January 23, 1953, entitled "High Velocity High Altitude Aircraft."

Another object of the invention is to provide aircraft of circular plan-form and of bi-convex vertical cross section which may be devoid of the conventional fuselage, wings, and empennage. The circular plan-form airplane of the invention has spherical has spherical convex upper and lower skin surfaces constituting the major surface areas of the airplane. This simple structure or design has many inherent advantages and features. It:

(1) Is an inherently rigid, strong structure having greater resistance to bending and torsional moments than other airborne configurations;
(2) Provides for a more uniform weight distribution over the lifting surface than other aircraft configurations;
(3) Allows a more uniform distribution of landing forces into the airplane structure and due to its circular plan-form permits the employment of any selected or required number of landing struts;
(4) Is not subject to flutter or to damage by gusts;
(5) Is structurally efficient in containing internal cabin pressures, fuel and other internal loads by reason of the spherical convex upper and lower skin surfaces joined one to the other at the circular periphery of the craft;
(6) Operates to effectively or uniformly distribute the thermal stresses and deformations resulting from high Mach number flight;
(7) Permits the positioning or concentrating of the useful loads in concentric relation to the center of gravity and geometric center of the structure and the disposition of the fuel loads in balanced or concentric relation to the center of gravity and geometric center;
(8) Is stable during vertical ascent and descent due to its circular plan-form;
(9) Provides a maximum volumetric capacity for the pay loads and fuel;
(10) Is simple and inexpensive to construct owing to its simple regular configuration and because many of its parts may be of like or identical size and shape;
(11) Occupies a minimum of field or floor space when not in flight due to its inherent compactness;
(12) Is inherently aerodynamically efficient, having a good L/D ratio and presents a substantially continuous unbroken peripheral edge (leading and trailing edges) and a smooth profile offering a minimum of skin friction drag; and

2

(13) May land and takeoff from any medium, being stable even on rough water.

These and other considerations and advantages all result from the simple compact circular plan-form airframe of bi-convex cross section.

Another object of the invention is to provide an aircraft of this character having a diametrically extending thin plate airfoil region or portion containing in part the primary propulsive mechanism or means, this thin plate airfoil constituting only a relatively small portion of the total airfoil and yet assisting in producing aerodynamic lift with a minimum of drag.

Another object of the invention is to provide an aircraft of the character above referred to which employs a low boiling point fuel, such as butane or propane as the fuel and refrigerant. Such fuels have approximately 15% more energy value than conventional aircraft fuels but are much less dense, thereby requiring considerably greater tank space or volume. The circular plan-form bi-convex airplane of the invention supplies this necessary fuel storage volume and contains the low boiling point fuel in such a manner that it effectively cools the skin and assists in protecting the passenger and cargo compartments against excessively high temperatures. The low boiling point fuel through vaporization of even only one-third of the total fuel carried absorbs in the neighborhood of 1 million B.t.u. per hour, thereby bringing the skin temperatures into equilibrium at a substantially lower value. Thus the configuration of the airframe or body and the type of propulsive fuel and its mode of storage mutually contribute to the cooling of the skin and provide storage regions of ample volume for the low density fuel.

Another object is to provide aircraft of this kind having a safe dependable propulsive system wherein operational failure of certain of its components will not endanger the craft or its occupants. The load turbines which incorporate the high velocity rotors of the system are so positioned that the planes of rotation of these rotors do not in any instance intersect the passenger compartment or vital portions of the craft while in translational flight. Accordingly, failure or bursting of a rotor will not endanger the occupants of the craft.

Another object of the invention is to provide an aircraft of this kind wherein the variable inlet and the controllable outlet or nozzle of the main duct are generally rectangular and are elongated spanwise of the circular craft to best conform with its thin periphery. The elongated inlet and outlet contribute to the desirable thin central airfoil region and reduce wake losses. The main propulsive duct is diametric of the circular airfoil or body so that there is ample length for the propulsive mechanism in the circumference of the body and therefore no need to extend or project either the ram inlet or the nozzle from the periphery of the circular craft.

A further object is to provide a circular plan-form aircraft as described characterized by the bi-convex skin surfaces capable of carrying substantial internal pressures and by simple yet strong and effective passenger, cargo and fuel compartmentation. The cabin is surrounded by a circular wall or bulkhead extending between the upper and lower convex skin structures, this bulkhead together with the skin structures providing or constituting the fuel tanks or compartments and there are circumferentially spaced radial baffles in the fuel compartments secured to the skins and the circular bulkhead. This internal structure, including, of course, minor local stiffening ribs, etc., is so strong and rigid as to readily withstand all aerodynamically induced vibration forces as well as all other operational loads and forces.

Other objectives and features will become apparent

195 || @HighEarthOrbit_ linktr.ee/Grider2

from the following detailed description of typical preferred embodiments of the invention throughout which reference will be made to the accompanying drawings, wherein:

FIGURE 1 is a rear elevational view of an aircraft of the invention;

FIGURE 2 is a plan view of the aircraft with a portion broken away to illustrate the internal structure;

FIGURE 3 is a front elevation of the craft;

FIGURE 4 is an edge or side elevation of the craft with broken lines illustrating the propulsive island in a vertical position to produce vertical thrust for ascent or descent;

FIGURE 5 is a transverse sectional view taken substantially as indicated by line 5—5 on FIGURE 2 and illustrating the landing struts and the tip portions in elevation;

FIGURE 6 is a fragmentary plan view of another aircraft of the invention with a portion broken away to illustrate one of the tip nozzles;

FIGURE 7 is an enlarged fragmentary vertical sectional view taken as indicated by lines 7—7 on FIGURE 2 showing one of the fuel compartments and a portion of the fueling means; and

FIGURE 8 is an enlarged fragmentary sectional view taken as indicated by line 8—8 on FIGURE 7.

The aircraft of the invention as illustrated in FIGURES 1 through 5, 7 and 8, includes an airframe, airfoil or body 10, which I will usually hereinafter refer to as the body, of circular plan-form. As best illustrated in FIGURE 2, the body 10 has a periphery 11 which is preferably concentric with an axis 12 which may constitute the center of gravity and the geometric center of the airplane. This periphery 11 is continuous and unbroken except for minor interruptions at the inlet and outlets of the propulsive system, to be subsequently described, and as seen in FIGURES 1, 3, 4 and 5, it is quite sharp to have good aerodynamic characteristics and to minimize the frontal area of the craft. In accordance with the invention the upper and lower surfaces or skins 13 and 14 of the airplane are convex and are preferably spherically convex, being in the nature of two like opposing spheroidal segments having their bases or chords coincident and joining at the plane of the peripheral edge 11. These spherical convex surfaces or skins 13 and 14 are smooth and regular to offer a minimum of drag and join at the circumferential edge 11 (leading and trailing edge) which itself is sharp and aerodynamically efficient. As briefly mentioned above, the body 10 has a diametric airfoil-rear region which is defined by a rather broad yet shallow rib portion 15 extending completely diametrically across the underside of the body 10 and a similar shallow rib portion 16 at the upper side of the body extending from adjacent the center thereof to its trailing edge. The lower side of the lower rib portion 15 is flat and substantially parallel with the plane occupied by the peripheral edge 11 and in a like manner the surface of the upper rib portion 16 is flat and parallel with the same plane. The primary purpose of the rib portion is to provide ample space within the aircraft for elements of the propulsive system, to be later described, although the rib portion constitutes a thin plate airfoil which assists in providing aerodynamic lift for the airplane. In practice, the rib portions 15 and 16 need not be very thick and may die into the contours of the skins 14 and 13 adjacent the center of the craft. The sides or edges of the rib portions 15 and 16, which extend chord-wise of the body 10, are faired into the skins 14 and 13 respectively. However, where the portions 15 and 16 extend fore and aft along the fore and aft axis of the craft, they constitute a rib which serves as a vertical stabilizer for the airplane. The surfaces or skins 13 and 14, the skins of the rib portions 15 and 16, the peripheral edge 11, and other exposed parts of the airplane such as fairings, etc. are preferably constructed of

stainless steel or other material capable of retaining adequate strength when subjected to the high temperatures developed during the multi-Mach number flight program.

The airframe 10, as just described, is inherently capable by reason of its geometrical configuration of withstanding heavy stresses and loads and the invention provides a simple yet strong internal structure for reinforcing the airframe and for assuming major structural and functional loads. A pressure bulkhead 17, curved in both plan-form and radial planes is provided in the body 10 and extends between and is secured to the upper and lower skins 13 and 14. The bulkhead 17 is concentric with the axis 12 and may be substantially vertical. A large diametered propulsive air duct 18 extends diametrically through the body 10 and intersects the circular bulkhead 17 to divide the space encircled thereby into two main passenger and/or cargo compartments 20. The duct 18, which will later be described in connection with the propulsive system, extends fore and aft and is coaxial with the rib portions 15 and 16 above described. As the duct 18 interrupts the bulkhead 17 and divides the bulkhead into two sections, there are walls 24 adjacent to and parallel with the duct for connecting the ends of their respective partially circular bulkhead portions. The main compartments 20 which may or may not be interconnecting depending upon the relative diameter of the air duct 18, are shown in the drawings as passenger compartments, being provided with rows of aft facing seats 31. The compartments 20 may, in practice, be defined by portions of the above mentioned walls 24 and by partitions 21, 22 and 23. The bulkheads or partitions 21, 22 and 23, together with the walls 24, define generally rectangular passenger compartments 20 and as the bulkhead 17 is circular, marginal compartments 25, 26 and 27 remain forward, aft and outboard of the main compartments.

The forward compartments 25 may constitute the pilot and crew areas, the outboard compartments 26 may be used to carry luggage, mail, cargo, etc. and the aft compartments 27 may be restrooms or toilets. The various compartments, just described, may be interconnecting. Entrances or hatchways 28 in the upper and lower skins 13 and 14 lead to the main compartments 20 and are equipped with sealed hatches or closures 30 capable of withstanding substantial pressure differentials. The various partitions and walls and particularly the bulkhead 17 and its wall portions 24 may be structural load assuming elements secured to one another and to the skins 13 and 14 to constitute a strong internal assembly or structure.

As briefly noted above, the regions or areas of the circular plan-form bi-convex body 10 around the passenger and load carrying compartments serve as fuel tanks or fuel cells which I have designated 32. The fuel tanks or cells 32 are bounded or defined by the skins 13 and 14, the bulkhead 17 and chord-wise walls or bulkheads 34 extending from the bulkhead 17 to the periphery 11 adjacent and generally parallel to the main air duct 18. I prefer to provide the fuel cells 32 with multiplicities of circumferentially spaced radially disposed internal baffles or bulkheads 35 and spaced circumferential or circular bulkheads 36. These bulkheads 35 and 36 which extend between the skins 13 and 14 and which are attached to the skins materially increase the strength and rigidity of the structure. The bulkheads 35 and 36 are perforated, having openings 29 and 39 respectively (see FIGURE 7), so that the various regions or areas of the individual fuel cells 32 are in communication. It is to be noted that the fuel in the cells 32 is in heat absorbing or heat transfer relation to the major portions of the skins 13 and 14 and the bulkhead 17 and thus serves as a refrigerant to reduce the temperature of the skins and to protect the passenger and cargo compartments 20, 25, 26 and 27 against excessively high temperatures. The cooling or refrigerating action of the fuel and the refrigerating system will be more fully described hereinafter.

196 || @HighEarthOrbit_ linktr.ee/Grider2

Special provision is made to supply or fill the fuel cells 32 with the low pressure fuel. Because butane, propane, and like fuels vaporize readily at normal ground temperatures, it is necessary to continuously withdraw vaporized fuel from the cells or tanks 32 as the cells are filled with liquid fuel and until the craft takes off. For this purpose the lower wall or skin 14 of each fuel cells 32 has two fuel conduits or fittings 37 and 38 (see FIGURE 7 and 8), the fitting 37 serving to discharge liquid fuel into the cell and the fitting 38 being adapted to bleed off fuel vapor from its respective cell. The fittings 38 have stand pipes 40 extending upwardly to adjacent the tops of the cells 32 to receive the fuel vapor. When refueling the airplane and until ascent has been initiated, pipes or hoses 41 are connected with the fittings 37 to supply liquid fuel to the cells and similar hoses 42 are connected with the fittings 38 to draw or carry away the fuel vapor. The fittings 37 and their related hoses 41 and the fittings 38 and their related hoses 42 may have identical detachable connections and valve means and while I will specifically describe the detachable connections and the valve means of the fittings 38 and their pipes or hoses 42, it is to be understood that this description is equally applicable to the corresponding connections and valve means of the fittings 37 and their pipes 41. As shown in FIGURE 8, the hoses or pipes 42 have spring clips 43, or the equivalent, detachably engaged with shoulders 44 on the fittings 38 to hold them in communicating connection with the fittings. Seal rings 47 are engaged between the fittings 38 and the hoses or pipes 42 to prevent the leakage of the vapor or fuel. The fittings 38 and the hoses or pipes 42 have opposing poppet valves 45 and 46, respectively, spring urged to closed positions. The relationship of the valves 45 and 46 is such that so long as the pipes 42 remain coupled with the fittings 38 the valves cooperate with one another to be held in the open positions where the fuel vapor is free to flow out through the hoses or pipes 42. The pipes 42 are connected with an absorption pump (not shown) for drawing away the fuel vapor and the hoses or pipes 42 are connected with a source or sources of the liquid fuel under pressure so as to deliver the liquid fuel to the cells 32 of the airplane. Preparatory to takeoff and so long as the aircraft remains on the ground or field, liquid fuel is pumped in through the hoses or pipes 41 and the vaporized fuel is withdrawn through the hoses or pipes 42. When the aircraft rises vertically from the field or ground, the spring clips 43 snap out of engagement with their shoulders 44 allowing the fittings 37 and 38 to move upwardly out of engagement with their respective pipes 41 and 42. When this occurs the valves 45 and 46 automatically close to retain the liquid fuel and the vaporized fuel within the fuel cells 32 of the airplane and to avoid the spilling or leakage of the fuel from the hoses or pipes 41 and 42.

It is to be observed that the circular plan-form biconvex aircraft body 10 provided with the partly circular fuel cells 32 has a large aggregate volumetric fuel storage capacity. This well adapts the craft for the utilization of butane or propane which have approximately 15% greater energy value than conventional aircraft fuels on a weight basis but are far less dense and, therefore, require large capacity storage space for comparable ranges of flight. By making the bulkhead 17 of less diameter the fuel capacity of the cells 32 may be greatly increased to extend the operational range of the craft. This is indicated and practical in the case of military craft where the personnel and the payload areas or compartments may be quite small. Furthermore, for military craft it may be desirable to use liquid hydrogen as the propulsive fuel to materially extend the operational range. Liquid hydrogen has a very low density (.086) with a boiling point density of 0.070 and on a volume per heat content basis requires approximately three times as much space as gasoline. However, for pilotless military aircraft and military aircraft carrying one or two men, the body 10 is such that it may be readily compartmented to contain ample liquid hydrogen as its fuel for a non-stop flight of, say, 7,500 miles. Such liquid hydrogen could well be supplied to or pumped into the fuel cells 32 in the same manner as the other fuels.

The lower boiling points fuels are especially well adapted for cooling the passenger and payload compartments and other critical regions of the aircraft and greatly reduce the temperature of the skin. Butane has a boiling point under 33° F. and propane has a boiling point of —45° F. Such fuels and the vapor therefrom in contact with the inner surfaces of the skins 13 and 14 prevent the skins from being excessively heated by the aerodynamically induced heat. Assuming the body 10 has a diameter of 50 ft. and that the craft is operated at a speed of Mach number 4 at an altitude of 100,000 ft. it is calculated that the temperature of the skins unless provision is made for cooling it, would reach 1139° F. However, the skins 13 and 14 preferably has their outer surfaces chemically oxidized black, or otherwise treated, or coated to have a heat emissivity of approximately 0.95. This high emissivity will result in radiation of a substantial amount of heat energy into space. Although the emissivity of a surface is numerically equal to its absorptivity there is a distinct and novel advantage in providing the skins 13 and 14 of the airplane of this invention with external surfaces having high emissivity. The heat input to the skins 13 and 14 as a result of the frictional drag and the airplane speed is considerable. On the other hand, solar radiation will tend to increase the skin temperature to only a very minor extent. It is estimated that the aerodynamically induced heat input to the skin will be approximately thirty times as much as the heat induced by solar radiation. Accordingly, the skin surfaces of high emissivity and correspondingly high absorptivity have the net effect of emitting many times as much heat energy as they are capable of absorbing and the surfaces of high emissivity function as effective heat dissipating elements of the cooling or refrigerating means of the invention. Additionally, the heat energy required to vaporize approximately 30% of the low boiling point fuel during the flight program is substantial, being in the neighborhood of 1 million B.t.u. per hour under the above assumed conditions. Thus it is calculated that the skin temperatures under the above conditions will come into equilibrium at about 940° F. The stainless steel skins 14 and 13 maintain their structural integrity at such a temperature and the internal structure adjacent thereto is not adversely affected at such a temperature. The material reduction in the temperature of the skins of the aircraft has the effect of increasing the efficiency and range of the craft. The reduction in skin temperature proportionately reduces the viscosity of the boundary layer air and therefore increases the aerodynamic efficiency of the circular plan-form biconvex airfoil or craft.

The invention provides effective thermal insulation at the inner surfaces of the skins 13 and 14 at the bulkheads 17, walls 24, bulkheads 34, and other walls, bulkheads, etc. where necessary or desirable to thermally insulate the internal structure and the passenger and payload areas of the aircraft, it being observed that the fuel cells 32 containing the low boiling point fuel and its vapor substantially surround the passenger and payload compartments 20, 25, 26 and 27. The fuel cells 32 and their contents thus form effective thermal barriers protecting the passenger and payload regions. FIGURE 8 shows a form of insulation that may be used on the skins 13 and 14 and the several bulkheads, walls, etc. The insulation, as illustrated, is provided on the inner surface of the skin 14, is being understood that it is equally applicable to the other insulated areas and regions. The insulation includes "Alfoil" blankets 48 which are comprised of pluralities of corrugated or crinkled aluminum or other metal foil sheets arranged and related so that there are multiplicities of air spaces betwen the adjacent foil sheets. Such

197 || @HighEarthOrbit_ linktr.ee/Grider2

insulation has a very low apparent density and a low k factor and is therefore well adapted for this application. However, other appropriate thermal insulation or insulating materials may be use if desired. The blankets 48 of metal foil are engaged on or fixed to the inner side of the skin 14. In order to retain the rather loosely arranged blankets 48, I provide metal mesh, screens or the like, 51 to extend across the blankets 48. Immersion of this type of insulation, either temporarily or permanently, in the fuel and/or fuel vapor of the cells 32 does not impair the insulating qualities although it may alter the k factor while the insulation is immersed, depending upon the proportion of fuel vapor between the layers. The foil of the insulating blankets 48 is preferably polished or bright to be most efficient in reflecting radiant energy under practically all conditions.

In accordance with the broader aspects of my invention any suitable or selected type of alighting or landing gear may be employed. In the drawings, and more particularly in FIGURES 2 and 5, I have shown a plurality of spaced generally vertical shock absorbing struts 53 projectable from the underside of the body 10. The retractable struts 53 may be of the oleo type and are preferably arranged for vertical retraction into relatively small spaces or compartments 54 at the bulkhead 17 and adjacent the adjoining corners of the above described compartments 20, 26 and 27. In this connection it is to be observed that the landing gear struts 53 may readily be anchored or attached to the body 10 at regions where the landing loads may be transmitted directly to the strong rigid internal structure of the craft and that by reason of the circular configuration of the body 10 and the circular arrangement of its bulkhead 17 and other structural parts any selected or required number of the struts 53 may be installed in practically any required pattern or relationship. The lower ends of the landing struts 53 may be equipped with wheels, pads, or the like. In the drawings I have shown pads 55 on the struts 53 of such a nature that they may lie substantially flush with the surfaces of the lower skin 14, when the struts are retracted, so as to offer little or no aerodynamic drag.

It is contemplated that translational flight will usually be at such great altitude that visual observation by the passengers will be of minor consequence and there is no real necessity for the provision of windows, or the like, in the passenger compartment 20. It is also contemplated that the flight of the craft will be controlled by a remotely controlled automatic pilot means thus reducing the flight personnel to a minimum. However, to facilitate pilot controlled landings, maneuvers during emergencies, etc. either one or both of the pilot compartments 25 is provided with a periscope 64, shown in a general way in FIGURE 2.

The propulsive system of the aircraft illustrated in FIGURES 1 to 5 inclusive may be said to comprise, generally, a ducted compressor 65 capable of angular adjustment or movement to produce vertical lift and translational propulsion, upper and lower load turbo powerplants 66 and 67 for driving the compressor 65 and for producing propulsive and directional thrust, a variable ram or air inlet 71 for the ducted compressor 65 and ram jet means 70, a variable area and directional outlet or propulsive nozzle 72 for the ducted compressor and ram jet means, and various other parts and mechanisms associated with these primary propulsive elements.

The ducted compressor 65 is preferably located at or adjacent the geometric center of the circular planform airframe or body 10 and is pivotally mounted to be movable about a spanwise and preferably diametric axis so as to be turned to a vertical or generally vertical position during the vertical ascent and descent of the craft and to be brought to a position coaxial with the abovementioned fore and aft duct 18 and during translational flight of the craft. The main air duct 18 extends diametrically through the circular body 10, as above described, and is provided at its forward end with the variable area inlet 71 and at its aft end with the variable area and directional nozzle 72. The major portion of the duct 18 is preferably cylindrical although its end portions are horizontally elongated, as will be more fully described in connection with the inlet 71 and the outlet or nozzle 72. The airframe or body 10 has a central vertical opening 73 which intersects the duct 18 and the propulsive compressor 65 is housed or carried in a structure 74 which I will term an "island." This island 74 is journaled at the vertical opening 73 to be movable or turnable therein about a horizontal spanwise axis. The island 74 may be a generally rectangular structure to fit between the walls 24 of the compartments 20 with suitable clearance, and has upper and lower walls which are generally flush with the upper and lower sides of the rib portions 15 and 16 of the body 10 when the island is in the horizontal position. The island 74 is tubular or provided with a through duct 79 to register with, and in effect form a part of, the propulsive duct 18 when the island is in the generally horizontal position.

The island 74 is supported for angular movement about the spanwise axis on tubular trunnions 82 projecting from the opposite sides of the island and journaled on the walls 24. The trunnions 82 are tubular for the reasons to be later described. The ducted compressor 65 is of the supersonic class insofar as the relative velocity of entrained air against the blading is concerned and carries a row of supersonic blades 88. The supersonic compressor 65 is adjacent and slightly forward of the axis of angular movement of the island 74 and the geometric center of the airframe or body 10.

In order to facilitate a better understanding of the invention the following data is given of a typical installation or embodiment wherein the airframe or body 10 is assumed to be 50 ft. in diameter and the craft is assumed to have a gross loaded weight of about 55,000 pounds. In such a case the diameter of the ducted compressor 65 will be 6 ft. and the speed of rotation of the compression rotor will not exceed 3700 r.p.m., which is equivalent to the comparatively conservative top speed of 1200 feet per second, precluding the possibility of the rotor bursting. The compression ratio of the ducted compressor 65 will be 1.89 to 1 and the total weight flow of air through the ducts will be 770 pounds per second. It is to be understood that these figures are merely illustrative and, of course, will vary in different applications and aircraft.

The load turbo powerplants 66 and 67 serve to assist in driving or rotating the ducted compressor 65 and themselves produce propulsive gas streams or jets. The powerplants 66 and 67 are provided or arranged at a vertical axis which intersects the axis of rotation of the ducted compressor at or adjacent the geometric center 12 of the craft. The powerplants 66 and 67 are carried by the island 74 and are arranged on the upper and lower sides respectively of the island, assuming the island to be in the full line position illustrated throughout the drawings. The powerplants 66 and 67 are supercharged by the ducted compressor 65 and serve to drive the compressor through a transmission means as described in my application Serial Number 332,957, identified above, which describes and claims the propulsive system or means of the airplane including the island 74, the propulsive means carried by the island, the means for moving the island between the full line and broken line positions of FIGURES 4 and 5, the fuel supply and burner means and the other elements of the overall propulsion system.

The tip or outboard powerplants 68 and 69, which are fully described in my application Serial Number 332,957, are provided to assist in driving the ducted compressor 65, to produce propulsive jets, and they are controllable to provide for or to assist in the steering or

198 || @HighEarthOrbit_ linktr.ee/Grider2

directional control of the craft. The turbo jet load powerplants 68 and 69 are positioned on the periphery of the circular plan-form airframe or body 10 on a common diametric axis which intersects the axis of rotation of the ducted compressor 65 and the longitudinal axis of the ducts 18 and 79 at or adjacent the geometric center 12 of the body 10. In the aircraft illustrated where the periphery of the body 10 is sharp or thin, I provide streamlined enlargements or pods 124 at the outboard edges or "tips" of the body to contain the powerplants 68 and 69 and their auxiliaries and controls. These pods 124 may be designed or shaped to reduce the vortices losses at the margins or tips of the craft.

Like the inboard load powerplants 66 and 67, the outboard or tip turbo powerplants 68 and 69 are supercharged by the ducted compressor 65, receiving compressed air from the compressor and further compressing it before it reaches their respective combustion zones. Tunnels or tubes 130 of substantial capacity which extend radially outward through the compartments 20 and 21 and the fuel cells 32 conduct the compressed air from the compressor to the outboard powerplants 68 and 69. The powerplants 68 and 69 are carried for angular movement about a spanwise or diametric axis which intersects the fore and aft axis of the body 10 at the geometric center 12 of the body. The tip or outboard turbo load powerplants 68 and 69 are drivingly connected with the ducted compressor by shafts (not shown) extending outwardly through the tubes 130 and drivingly connected with the compressor by a transmission means.

The load turbo powerplants 66, 67, 68 and 69 are arranged and located in such a fashion that explosion or bursting of any of them during flight will not endanger the occupants or any critical portions of the craft, the rotors of the powerplants 66 and 67 being arranged to rotate in planes parallel with and spaced above and below the airframe proper and remote from the passenger compartments and fuel cells 32 and the rotors of the outboard load powerplants 68 and 69 being arranged to rotate in planes far remote from and parallel with the side walls 24 of the occupied compartments and outboard from the fuel cells 32 and the periphery of the airframe.

As mentioned above, the island 74 carrying the ducted compressor 65 is pivotally movable about the spanwise axis of the airframe or body 10 between the position when its air duct 79 is aligned with and in register with the main air duct 18 of the body 10 for translational flight and the position where the island duct 79 is vertical or substantially normal to the duct 18 for generally vertical takeoff and landing.

The present specification is not primarily concerned with the details of the propulsive system such as the means for moving the island 74, the controls and fuel systems for the powerplants 66, 67, 68 and 69, the fuel injector or combustor means for introducing fuel downstream from the compressor 65, the means for controlling or directing the jet streams from the powerplants 68 and 69, and like features, since these and the other elements of the propulsive system are fully described in my copending application Serial Number 332,957. However, it may be noted that fuel or fuel vapor is led from the upper portions of the fuel cells by pipes 373 for consumption by the propulsive system. These pipes 373, which are controlled by valves 374, extend along the walls of the passenger compartments 20 so that the fuel vapor assists in refrigerating the compartments. Other pipes 185, lead from the lower portions of the fuel cells to the propulsive system or propulsive components.

The inlet 71 of the main propulsive air duct 18 is in the nature of a supersonic variable ram inlet. The forward or inlet end portion of the duct 18 is elongated in the spanwise direction, the forward portion of the duct flaring forwardly and spanwise while at the same time being reduced in its vertical dimension to terminate at a rectangular forward opening 197, see FIGURES 2 and 3. The opening 197 is in the lower rib portion 15 being below the periphery 11 of the body 10, and has generally straight horizontal and vertical margins at its forward terminus. It should be noted that the elongate entrance of the opening 97 conforms generally with the thin forward edge or periphery of the body 10 to keep the frontal area of the craft at a minimum. The ram inlet 71 is of variable area, having an island 202 of variable volume or variable cross section. The main propulsive jet nozzle 72 at the aft end of the main duct 18 automatically changes from a subsonic nozzle to a supersonic nozzle and vice versa in accordance with the flow conditions of the discharging air and gas jet, incorporates variable direction features to obtain pitching trim, and is operable as an air brake to reduce the velocity of flight under certain conditions. The variable area inlet 71 and the variable propulsive nozzle 72 are more fully described in my copending application Serial Number 332,957, identified above.

FIGURE 6 illustrates another aircraft of the invention characterized by turbo-propeller powerplant 400 serving as the primary propulsive means. In this aircraft the body 10, the duct 18, the ram inlet 71, the propulsive nozzle 72, and the various other parts may be the same as in the above described embodiment of the invention. The central island 474 is substantially the same as the island 74, however, it is shaped and proportioned to contain the powerplant 400. The island 474 is arranged to be turned or pivoted on the spanwise axis of the body 10 and the trunnions or means for pivotally supporting the island also serve to supply compressed air from the powerplant to lateral ducts 430 which carry the air outboard to directional nozzles 420. These nozzles 420, which are movable in curved slots 401 in the periphery of the body 10, are rotated or pivoted by reversible electric motors 440 acting through suitable rack and pinion means 437 associated with the nozzles. The powerplant 400 may be of the type disclosed in my earlier Patents 2,563,270 issued August 7, 1951, and 2,575,682 issued November 20, 1951. The powerplant 400 has a propeller or compressor means 414 in the tubular island 474 and is a turbo-powerplant serving to drive the compressor means and to discharge a propulsive jet rearwardly through the duct 18. The propeller or compressor means 414 serves to compress air in the duct system to supercharge the turbo engine and to increase the pressure of the air discharging through the duct 18 and nozzle 72. The rammed air in the duct 18 supercharged or further compressed by the compressor 414 is also directed to the directional propulsive nozzles 420 at the periphery of the body 10. For vertical ascent and descent of the aircraft the island 474 is swung to a vertical position where it discharges the propulsive jet downwardly and the outboard nozzles 420 are likewise turned to face downwardly to produce upward or lifting thrusts. For translational flight the island 474 is brought to the horizontal or normal position where its propulsive jet stream flows aft through the main propulsive duct and the outboard nozzles 420 are also turned to face aft to provide additional forward thrust although these nozzles may be simultaneously and/or differentially adjusted or controlled to assist in directional control of the aircraft.

It is believed that the operation and features of the aircraft of this invention will be apparent from the foregoing description. It will be seen that the circular plan-form-bi-convex aircraft body 10 is a rigid, strong structure particularly resistant to bending and torsional loads. The body 10 being circular permits substantially uniform weight distribution over its lifting surfaces and a good distribution of landing forces. The spherical convex upper and lower surfaces 13 and 14 joined at the circular leading-trailing edge 11 are especially structurally ef-

199 || @HighEarthOrbit_ linktr.ee/Grider2

ficient in carrying the internal loads, the cabin air pressures, and the body 10 being circular allows for the disposition of the useful loads and fuel loads in concentric or balanced relation to the C.G. and geometrical center of the structure. Since the aircraft is devoid of wings, and empennage, etc. and since it has a simple regular configuration so that many of its parts may be similar or identical in size and shape, the body 10 and the overall aircraft is inexpensive to manufacture and maintain. The aircraft is aerodynamically efficient, having an excellent L/D ratio and because it presents a substantially continuous unbroken peripheral edge 11 and a smooth profile, it offers a minimum of skin friction drag. The portions 15 and 16 extending diametrically fore and aft provide a rib which serves as a vertical stabilizer and define a region which contains the main propulsive elements of the aircraft. This diametric fore and aft thin plate airfoil region has the added function of assisting in producing aerodynamic lift with a minimum of drag. It will be observed that the elements of the propulsive system are arranged or located so that their high velocity rotating members will not endanger either the aircraft or its occupants in the event of operational failure. The internal compartmentation of the circular plan-form aircraft, as above described, provides for effective protected passenger compartments as well as extensive cargo and fuel cells or spaces. The circular bulkhead 17, together with the spaced radial dividers or baffles of the outer compartments or fuel compartments are secured together and to the upper and lower skins 13 and 14 to constitute a strong rigid airframe.

Having described only typical forms of the invention I do not wish to be limited to the specific details herein set forth, but wish to reserve to myself any variations or modifications that may appear to those skilled in the art and fall within the scope of the following claims.

I claim:

1. In an aircraft; an aircraft body of circular plan-form having convex spheroidal upper and lower sides and including a fore and aft relatively flat airfoil section substantially diametric and parallel to the direction of horizontal flight.

2. In an aircraft the combination of; an aircraft body of circular plan-form and including a convex spheroidal upper skin, a lower skin, the body having a fore and aft duct substantially diametric and parallel to the direction of horizontal flight extending therethrough, and propulsive means in the duct for propelling the aircraft.

3. In an aircraft the combination of; an aircraft body of circular plan-form and including a convex spheroidal upper skin, a lower skin, the body having a fore and aft propulsive jet duct substantially diametric and parallel to the direction of horizontal flight extending therethrough, propulsive means in the duct, and means carried by the body external of the duct for driving the propulsive means.

4. In an aircraft the combination of; an aircraft body of substantially circular plan-form including a convex upper skin, a lower skin, and a substantially circular marginal edge connecting the skins, fuel consuming propulsion means in the body, circular bulkhead means in the body substantially concentric with said edge and spaced therefrom, the bulkhead means extending between the upper and lower skins and together with the skins defining cells for containing fuel for the propulsion means, said cells being at the outer side of the bulkhead means, and pay load compartments within the circular bulkhead means.

5. In an aircraft the combination of; an aircraft body of substantially circular plan-form including a convex upper skin, a lower skin, and a substantially circular marginal edge connecting the skins, fuel consuming propulsion means in the body, circular bulkhead means in the body substantially concentric with said edge and spaced therefrom, the bulkhead means extending between the upper and lower skins and together with the skins defining cells for containing fuel for the propulsion means, said cells being at the outer side of the bulkhead means, and pay load compartment means defined by the two skins and the inner side of the circular bulkhead means.

6. In an aircraft having fuel consuming propulsion means the combination of; an aircraft body of substantially circular plan-form carrying the propulsion means and including a convex generally spheroidal upper skin, a lower skin, and a substantially circular marginal edge connecting the skins, circular bulkhead means in the body substantially concentric with said edge and spaced therefrom, the bulkhead means extending between the upper and lower skins and together with the skins defining cells for containing fuel for the propulsion means, and spaced reinforcing bulkheads in the cells substantially concentric with said edge and connecting the upper and lower skins.

7. In an aircraft having fuel consuming propulsion means the combination of; an aircraft body of substantially circular plan-form carrying the propulsion means and including upper and lower skins, and a substantially circular marginal edge connecting the skins, circular bulkhead means in the body substantially concentric with said edge and spaced therefrom, the bulkhead means extending between the upper and lower skins and together with the skins defining cells for containing fuel for the propulsion means, said cells being at the outer side of the bulkhead means, and circumferentially spaced bulkheads in the cells extending substantially radially with respect to the axis of curvature of said edge and secured to the upper and lower skins to strengthen the body.

8. In an aircraft having fuel consuming propulsion means the combination of; an aircraft body of substantially circular plan-form carrying the propulsion means and including upper and lower skins, and a substantially circular marginal edge connecting the skins, circular bulkhead means in the body substantially concentric with said edge and spaced therefrom, the bulkhead means extending between the upper and lower skins and together with the skins defining cells for containing fuel for the propulsion means, said cells being at the outer side of the bulkhead means, spaced bulkheads in the cells curved substantially concentric with the axis of curvature of said edge, and spaced bulkheads in the cells extending radially with respect to said axis, the first and second mentioned bulkheads being secured to the skins to strengthen the body.

9. In an aircraft having propulsive means; an aircraft body of circular plan-form and having convex generally spheroidal upper and lower sides, the body including a diametric portion extending fore and aft and presenting generally flat upper and lower external surfaces to constitute a flat airfoil, said diametric portion containing said propulsive means.

10. In an aircraft; an aircraft body of circular plan-form and having convex spheroidal upper and lower sides, the body including a portion extending fore and aft and presenting generally flat upper and lower external surfaces to constitute a flat airfoil, and a propulsive air duct system extending through said portion from the forward end to the aft end of the body.

11. In an aircraft having propulsive means producing a propulsive air stream; an aircraft body of circular plan-form and having convex spheroidal upper and lower sides, the body including a diametric portion extending fore and aft and presenting generally flat upper and lower external surfaces to constitute a flat airfoil, an air duct extending through said portion from the forward end to the aft end of the body to carry said propulsive airstream, and a propulsive nozzle at the aft end of the duct for discharging the stream as a propulsive jet.

12. In an aircraft; an aircraft body of circular plan-form and having convex spheroidal upper and lower sides, the body including a diametric portion extending fore and aft and presenting generally flat upper and lower external sur-

200 || @HighEarthOrbit_ linktr.ee/Grider2

faces to constitute a flat airfoil, an air duct extending through said portion from the forward end to the aft end of the body, a horizontally elongated ram inlet at the forward end of the duct, means for propelling an air stream aft through the duct, and a horizontally elongated propulsive discharge nozzle at the aft end of the duct.

13. In an aircraft the combination of; an aircraft body of circular plan-form having a convex upper side and a lower side, a duct extending fore and aft through the body from its leading edge to its trailing edge, a variable area ram inlet at the forward end of the duct, a variable area propulsive nozzle at the aft end of the duct, and propulsive means in the duct operable to further compress the ram-compressed air flowing aft through the duct.

14. In an aircraft the combination of; an aircraft body of circular plan-form having a convex upper side, a lower side, a duct extending fore and aft through the body from its leading edge to its trailing edge, a variable area ram inlet at the forward end of the duct, a variable area propulsive nozzle at the aft end of the duct, and powerplant means in the duct for adding propulsive energy to the ram-compressed air flowing aft through the duct.

15. In an aircraft the combination of; an aircraft body of circular plan-form having a convex upper side, a lower side, and a straight through duct extending fore and aft through the body from its leading edge to its trailing edge having a variable area propulsive nozzle at its aft end.

16. In an aircraft the combination of; an aircraft body of circular plan-form having a convex upper side, a lower side, a duct extending fore and aft through the body from its leading edge to its trailing edge, a variable area ram inlet at the forward end of the duct, a variable area propulsive nozzle at the aft end of the duct, compressor means operable in the duct to further compress the ram-compressed air flowing therethrough, and turbo-jet engines on the body spaced outboard from the duct for driving the compressor means.

17. In an aircraft the combination of; an aircraft body of circular plan-form having a convex upper side, a lower side, a duct extending fore and aft through the body from its leading edge to its trailing edge, a variable ram inlet at the forward end of the duct, compressor means operable in the duct to further compress the ram-compressed air flowing therethrough, and turbo-jet powerplants on the body above and below the duct for driving the compressor means.

18. In an aircraft the combination of; an aircraft body of circular plan-form having upper and lower sides, a duct extending fore and aft through the body from its leading edge to its trailing edge, a variable area ram inlet at the forward end of the duct, a variable area propulsive nozzle at the aft end of the duct, means operable in the duct to further compress the ram-compressed air flowing therethrough, and engines on the outboard margins of the circular body for driving said means.

19. In an aircraft; an aircraft body of circular plan-form having convex upper and lower skins, a propulsive air duct extending fore and aft through the medial region of the body having a ram inlet at its forward end and a propulsive nozzle at its aft end, a circular bulkhead in the body extending between and connected with the skins to reinforce the body, the bulkhead defining the outer walls of central region passenger compartments, there being storage compartments in the body between its periphery and the bulkhead.

20. An aircraft including an aircraft body of substantially circular plan-form and having upper and lower sides, bulkhead means in the body curved about the central vertical axis of the body and extending between its upper and lower sides, passenger and payload compartments within the bulkhead means, a propulsive ram air duct extending fore and aft through the body having a ram inlet at its forward end and a propulsive nozzle at its aft end, a relatively low velocity propulsive means operable in the duct, and powerplants in the body spaced above and below the duct for driving the propulsive means, said powerplants being in planes spaced above and below the plane of said compartments.

21. In an aircraft; an aircraft body of circular plan-form having upper and lower skins, a propulsive air duct extending fore and aft through the medial region of the body having a ram inlet at its forward end and a propulsive nozzle at its aft end, and a circular bulkhead in the body extending between and connected with the skins to reinforce the body, the bulkhead defining the outer walls of central region passenger compartments, there being storage compartments in the body between its periphery and the bulkhead, the bulkhead being arcuate in vertical cross section and arranged with its convex side facing toward the periphery of the circular body.

22. In an aircraft the combination of; an aircraft body of substantially circular plan-form having convex upper and lower surfaces, bulkhead means in the body defining large volume storage compartments in the major peripheral regions of the body for containing low boiling point fuel and also defining passenger compartments in the central region of the body encircled by the storage compartments to be protected against aerodynamically induced high temperatures by the stored fuel, and a propulsive system for propelling the craft consuming said fuel.

References Cited in the file of this patent

UNITED STATES PATENTS

1,585,281	Craddock	May 18, 1926
1,957,896	Marguglio	May 8, 1934
2,377,835	Weygers	June 5, 1945
2,384,893	Crook	Sept. 18, 1945
2,397,184	Klose	Mar. 26, 1948
2,563,270	Price	Aug. 7, 1951
2,567,392	Naught	Sept. 11, 1951
2,575,682	Price	Nov. 20, 1951
2,619,302	Loedding	Nov. 25, 1952
2,718,364	Crabtree	Sept. 20, 1955
2,726,671	Zand et al.	Dec. 13, 1955
2,730,311	Doak	Jan. 10, 1956
2,772,057	Fischer	Nov. 27, 1956
2,807,428	Wibault	Sept. 24, 1957

FOREIGN PATENTS

1,047,657	France	Apr. 19, 1950
547,021	Italy	Aug. 6, 1956
50,033	France (Addition to 799,655)	Aug. 1, 1939

OTHER REFERENCES

Western Aviation Magazine, September 1956, pages 9 and 10.

201 || @HighEarthOrbit_ linktr.ee/Grider2

Nov. 27, 1956 J. C. FISCHER, JR 2,772,057

CIRCULAR AIRCRAFT AND CONTROL SYSTEM THEREFOR.

Filed Jan. 29, 1954 2 Sheets-Sheet 1

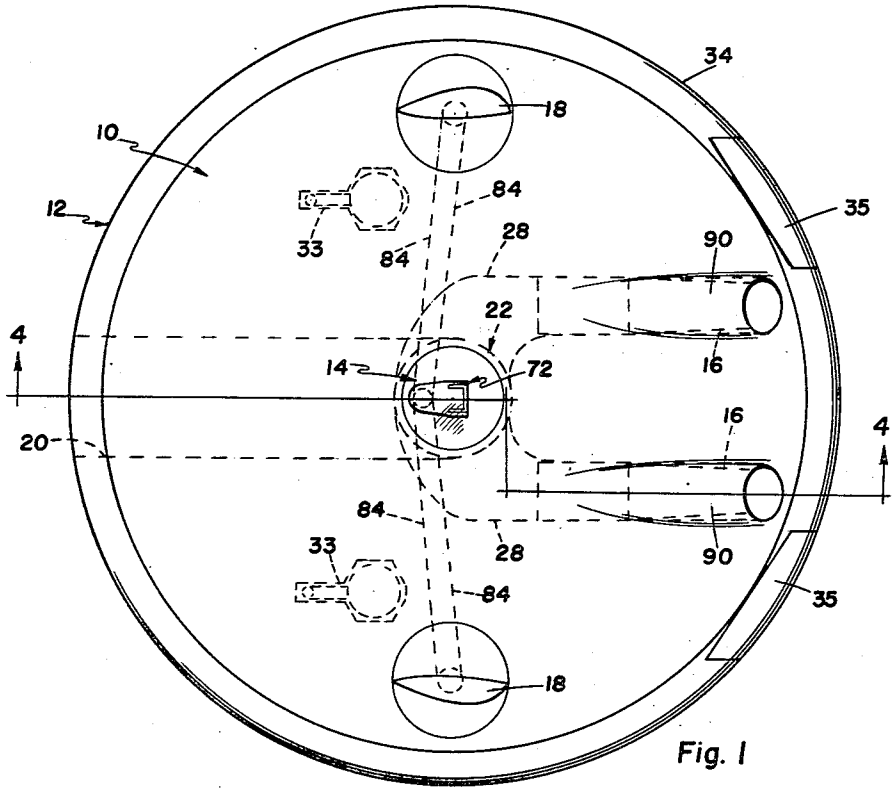

Fig. 1

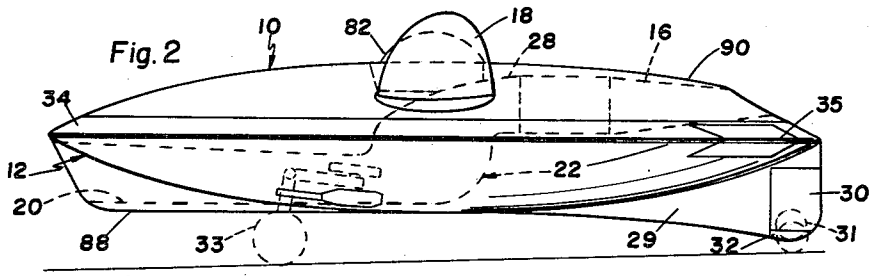

Fig. 2

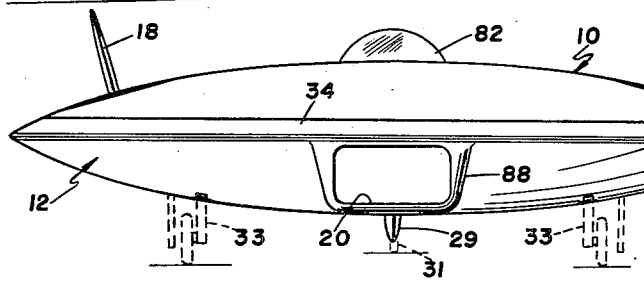

Fig. 3

INVENTOR.
JOHN C. FISCHER, JR.

BY Knox & Knox

ATTORNEY IN FACT
FOR APPLICANT

Nov. 27, 1956 J. C. FISCHER, JR 2,772,057

CIRCULAR AIRCRAFT AND CONTROL SYSTEM THEREFOR

Filed Jan. 29, 1954 2 Sheets-Sheet 2

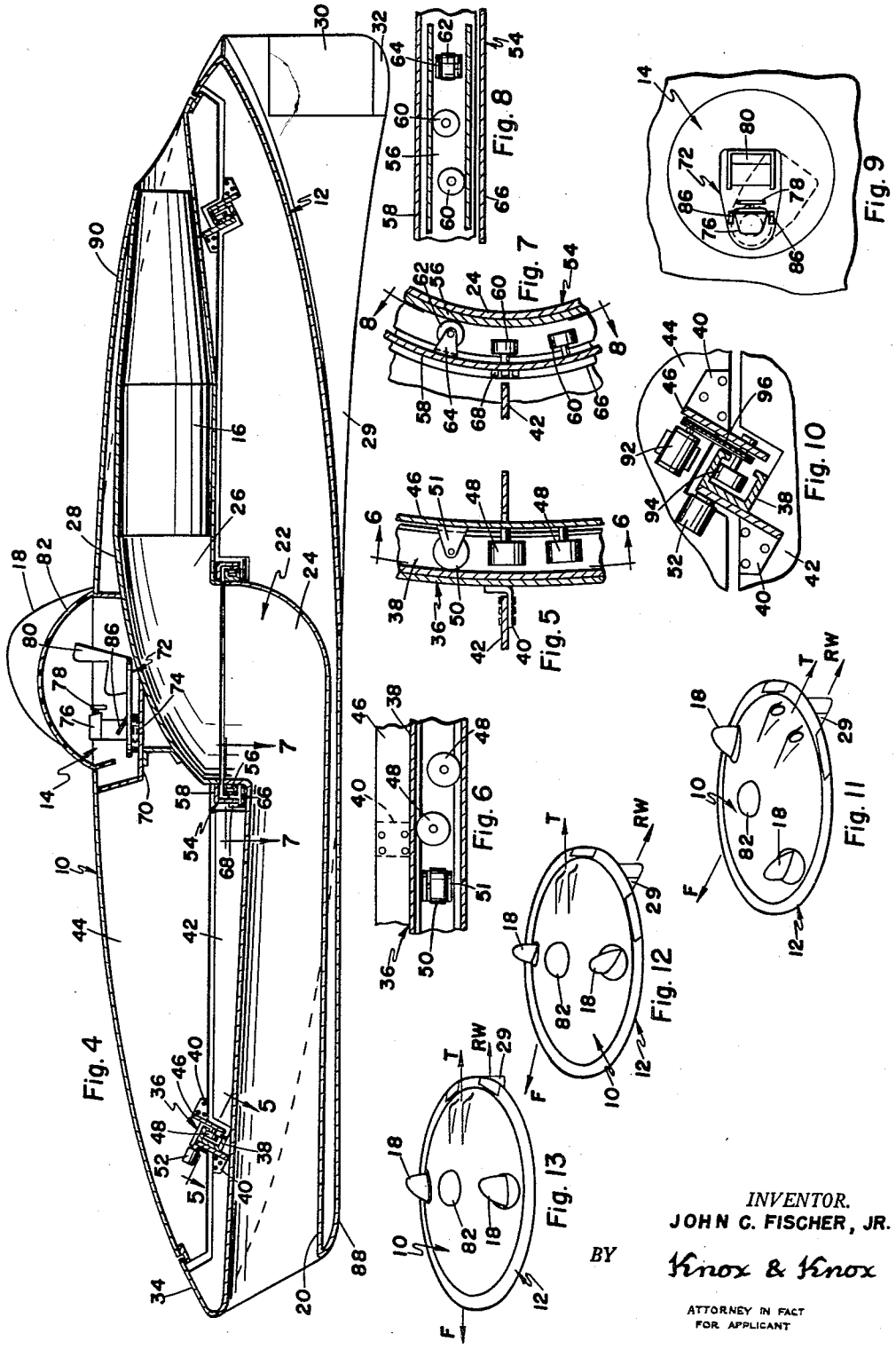

INVENTOR.
JOHN C. FISCHER, JR.
BY Knox & Knox
ATTORNEY IN FACT FOR APPLICANT

203 || @HighEarthOrbit_ linktr.ee/Grider2

United States Patent Office

2,772,057

Patented Nov. 27, 1956

1

2,772,057

CIRCULAR AIRCRAFT AND CONTROL SYSTEM THEREFOR

John C. Fischer, Jr., San Diego, Calif.

Application January 29, 1954, Serial No. 406,974

15 Claims. (Cl. 244—15)

The present invention relates generally to aircraft and more particularly to a circular aircraft and control system therefor.

The primary object of this invention is to provide a circular aircraft having a rotatably adjustable upper portion containing the propulsion means, and a mechanism for rotating the upper portion to alter the direction of thrust to obtain directional control of the aircraft.

Another object of this invention is to provide such an aircraft in which the lower portion has a stabilizing fin which tends to remain in parallel relation with the direction of relative wind while the aircraft is in flight. Thus during a turn, the lower portion of the aircraft is always aligned with the relative wind, so that normal pitching and rolling control of the aircraft may be maintained at all times, the lower portion also containing the control surfaces necessary for such maneuvers.

Another object of this invention is to provide an aircraft which is capable of sharp, flat turns without the necessity for banking as is normally required.

Another object of this invention is to provide an aircraft in which the pilot is seated generally at the center of rotation in such a position that the *g*-forces encountered during turns or similar maneuvers are imposed laterally to the pilot's body so that their effect is further minimized.

Another object of this invention is to provide an aircraft which, in addition to the special maneuvers made possible by the rotation of the upper portion, retains the full control of a conventional aircraft using conventional control surfaces.

Finally, it is an object to provide an aircraft of the aforementioned character which is simple and convenient to operate and which may be economically constructed according to accepted aircraft standards.

With these and other objects definitely in view, this invention consists in the novel construction, combination and arrangement of elements and portions, as will be hereinafter fully described in the specification, particularly pointed out in the claims, and illustrated in the drawings which form a material part of this disclosure and wherein similar characters of reference indicate similar or identical elements and portions throughout the specification and throughout the views of the drawings, and in which:

Fig. 1 is a top plan view of the aircraft.

Fig. 2 is a side elevation view of the aircraft.

Fig. 3 is a front elevation view of the aircraft.

Fig. 4 is an enlarged sectional view taken on the line 4—4 of Fig. 1.

Fig. 5 is an enlarged fragmentary sectional view taken on the line 5—5 of Fig. 4.

Fig. 6 is a sectional view taken on the line 6—6 of Fig. 5.

Fig. 7 is an enlarged fragmentary sectional view taken on the line 7—7 of Fig. 4.

Fig. 8 is a sectional view taken on the line 8—8 of Fig. 7.

2

Fig. 9 is an enlarged fragmentary plan view of the pilot's cockpit showing the pivotally mounted seat and control pedestal.

Fig. 10 is an enlarged sectional view, similar to the portion of Fig. 4 at which the section 5—5 is taken, showing an alternative method of rotating the upper portion by means of a servo motor.

Figs. 11, 12 and 13 are diagrammatic views of the aircraft in three positions during a turn to illustrate the disposition of the upper and lower portions.

Referring now to the drawings, the aircraft comprises an upper shell **10** and a lower shell **12**. The exact method of constructing the aircraft is not important to this disclosure, except that the various structural components must be designed according to accepted aircraft standards. The upper shell **10** contains the pilot's cockpit **14** and the motors **16**, two turbo-jet motors being shown as an example. Also on the upper shell **10**, adjacent the outer rim thereof and positioned approximately on the lateral diameter of the disc, are a pair of rotatable fins **18** which are used to rotate the upper shell.

The lower shell **12** is provided with an air intake duct **20** to carry air to the motors **16**. At the center of the aircraft on the axis of rotation is a plenum chamber **22** comprising a lower chamber **24**, which is an extension of the duct **20**, and an upper chamber **26** communicating therewith. The upper chamber **26** is located in the upper shell **10** and leads to a bifurcated duct **28** communicating with the motors **16**. Thus air is supplied to the motors **16** regardless of the relative disposition of the upper and lower shells.

Mounted on the longitudinal axis of the lower shell **12** and adjacent the rear thereof is a fixed fin **29** having a pivotally attached rudder **30**. Installed in the rudder **30** is a tailwheel **31** which is enclosed by suitable doors **32**. The aircraft is supported by the main landing gear legs **33** which retract into the lower shell **12**. The disposition and arrangement of the landing gear legs **33** and the tailwheel **31** are illustrative, the actual structure being best determined in the detail design of the aircraft. The upper and lower shells together constitute an airfoil of suitable aerodynamic design to provide the necessary lift and stability for the aircraft. The lower shell **12** extends slightly above the horizontal axis of the airfoil so that the upper shell **10** is smaller in diameter than the lower shell. The extended rim **34** of the lower shell **12** is fitted with a pair of elevons **35** located at the trailing edge of the airfoil slightly outboard of the motors **16**. The elevons **35** constitute the combined ailerons and elevators normally used on tailless type aircraft.

The upper shell **10** is attached to the lower shell **12** by a large diameter roller bearing **36** shown in Figs. 4, 5 and 6. This roller bearing **36** comprises a generally C-shaped channel rail **38** secured by suitable brackets **40** to the structural ribs **42** of the lower shell **12**, said channel rail being mounted at an upwardly converging angle. Secured to the structural ribs **44** of the upper shell **10** by further brackets **40** is a bearing ring **46** on which are mounted a plurality of vertical load rollers **48** which are vertically displaced in pairs so that the rollers alternately bear on the upper and lower surfaces of the channel rail **38** as shown in Fig. 6. Intermediate the pairs of rollers **48** are lateral load rollers **50** mounted in brackets **51**, these rollers **50** bearing outwardly against the channel rail **38** and being at right angles to the rollers **48**. It will be evident that the rollers **48** and **50** together support the upper shell **10** against vertical and lateral loads. Engaging the channel rail **38** and secured to a convenient structural member in the upper shell **10** is a pilot operated friction brake **52** which is used to lock the upper shell against rotation during normal flight. This brake **52** may be actuated pneumatically, hydraulically or electrically,

204 || @HighEarthOrbit_ linktr.ee/Grider2

many existing types of brakes being suitable for the purpose.

The upper and lower portions of the plenum chamber **22** are connected by a roller bearing **54** to ensure alignment and prevent loss of incoming air due to leakage. The roller bearing **54** comprises a generally U-shaped channel rail **56** secured to the upper rim of the lower chamber **24**. Extending outwardly and downwardly from the upper chamber **26** is a bearing ring **58**, having thereon a plurality of vertical load rollers **60** alternately vertically staggered as shown in Fig. 8. Intermediate the rollers **60** are lateral load rollers **62** mounted in brackets **64** and bearing inwardly on the channel rail **56** as shown in Fig. 7. The combination of rollers thus absorbs all vertical and lateral loads in the roller bearing **54** in a manner similar to that described for the roller bearing **36**.

Fitted around the lower chamber **24** below the channel rail **56** is a slip ring **66** which carries the necessary electrical contact rings to connect the pilot's controls to the various mechanisms in the lower shell **12**. The wiper contacts **68** engaging the slip ring **66** are mounted on the bearing ring **58**. It will be evident that electrically operated controls are necessary for the various mechanisms, such as landing gear retraction and elevon operation, due to the relative rotation of the upper and lower portions of the aircraft. The structure of the electrical slip ring **66** and the wiper contacts **68** are according to accepted standards, the details being fully understood by those familiar with the art.

The pilot's cockpit **14** has a floor structure **70** on which is a control pedestal **72**, pivotally mounted on a base **74**. Extending upwardly from the control pedestal **72** is a column **76** on which are the control wheel **78** and the associated aircraft controls. Also mounted on the control pedestal **72** is the pilot's seat **80** of suitable design. The cockpit **14** is, of course, fitted with a transparent canopy **82** for maximum visibility.

The fins **18** are connected by means of cables **84** to generally conventional rudder pedals **86** mounted on the control pedestal **72**.

The duct **20** is faired into the forward lower surface of the lower shell **12** by a fairing **88**, while the motors **16** are similarly faired into the rear upper surface of the upper shell **10** by cowlings **90**.

In normal flight, the upper shell **10** is locked against rotation by the friction brake **52**, control of the aircraft being accomplished by the elevons **35** and fins **18** in the normal manner. In order to make a sharp, flat turn, the friction brake **52** is disengaged so that the upper shell **10** may rotate freely. The turning action is illustrated in Figs. 11–13 in which the various arrows are used to clarify the maneuver. Arrow F indicates the direction of flight, arrow T indicates the direction of thrust and arrow RW indicates the direction of relative wind.

Fig. 11 shows the straight and level flight position in which the directions of flight, thrust and relative wind are all in alignment longitudinally of the aircraft. To start the turn, the fins **18** are offset by means of the pedals **86** to the position shown in Fig. 12. This offset causes the upper shell **10** to be rotated by the slipstream until the fins **18** are once more aligned with the relative wind. At this position the direction of thrust is to one side of the line of flight, with the result that the aircraft will be propelled to the side opposite to the direction of thrust. At the same time, the lower shell **12** is held stationary relative to the line of flight by the tendency of the fixed fin **29** to "weather-vane" into the relative wind as shown in Fig. 12. However, the direction of relative wind is changing due to the aircraft being propelled to one side by the thrust of the motors, thus the fixed fin **29** will gradually turn into the new direction of relative wind, so that the upper and lower portions of the aircraft are once more in alignment. This, the completed turn position, is shown in Fig. 13. The fins **18** are, of course, returned to neutral by the pilot as the aircraft assumes the required new heading. It will be seen that the "weather-vaning" of the lower shell **12** holds the air intake ducts **20** directly into the relative wind, so providing maximum ram effect to maintain the motors **16** at full operating efficiency.

In conventional aircraft which bank when turning, the *g*-forces on the pilot are considerable at high speeds. With the pilot in a sitting position and the aircraft in a steep bank these *g*-forces are effective longitudinally of the pilot's body, so causing black-out as is well known. With the present aircraft making a flat turn, the *g*-forces are effective laterally through the pilot's body with the pilot seated normally. It is well known that the *g*-forces are at least effective in this direction so minimizing the tendency of the pilot to black-out.

The pilot being seated at the axis of rotation of the aircraft, the effects of the *g*-forces are still further minimized. It will be evident that much sharper turns are possible than with conventional aircraft without undue discomfort to the pilot, this being a distinct advantage in combat or evasive maneuvers.

In the case of the present type of aircraft flying at extreme speeds, the effects of the centrifugal and *g*-forces encountered in a high speed turn are minimized to a bearable degree as explained above. However, the acceleration of the aircraft in the new heading after making a turn may commence before the turn is actually completed. While the aircraft is still turning, the pilot may not be actually facing in the true direction of acceleration, with the result that excess side loads are experienced. In aircraft using very high powered turbo-jet or rocket motors these side loads may be sufficient to cause loss of control. For this purpose the entire control pedestal is allowed to swing on its base **74** as shown dotted in Fig. 9. During a turn the seat **80** will tend to swing outwardly under centrifugal force so that the pilot faces the new direction of travel slightly before the aircraft reaches that heading and is thus in a position to absorb the acceleration forces. As the aircraft accelerates the seat will be held in general alignment with the direction of acceleration by the acceleration force. If necessary, some form of damping may be applied to the control pedestal **72** to prevent free swinging and oscillating during normal maneuvers.

For taxying and maneuvering on the ground the rudder **30** together with the tailwheel **31** are used. The tailwheel **31** is, of course steerable with the rudder, the pilot's controls for such a mechanism being well known to those skilled in the art.

During flight at extreme altitudes in rarefied atmosphere, the fins **18** are less effective. To maintain the required maneuverability at such altitudes the rotation of the upper shell **10** may be augmented by a servomotor or the like. Such an arrangement is shown in Fig. 10 in which a motor **92** is mounted on a convenient structural rib **44** adjacent the bearing ring **46**. Mounted on the bearing ring **46** is a driven roller **94** operatively connected to the motor **92** by a drive chain **96** or the like. The motor **92** is of the reversible type and is preferably operatively connected to the pedals **86** to rotate the upper shell **10** in conjunction with the action of the fins **18**. For certain applications it may be desirable to eliminate the fins **18**, in which case the upper shell **10** may be entirely rotated by the motor **92** to alter the direction of thrust.

It will be evident that aside from performing all maneuvers possible with conventional aircraft, the presently disclosed aircraft is capable of additional maneuvers previously impossible. Besides making sharp turns in a horizontal plane, a similar sequence of operations may be carried out to obtain changes of direction in a vertical plane or in any direction therebetween. This is accomplished by first rolling the aircraft on its axis longitudinal to the line of flight, by means of the elevons, into the plane of the desired direction change. The aircraft is

205 || @HighEarthOrbit_ linktr.ee/Grider2

then turned into the new direction by rotating the upper shell **10** as previously described. By this means the aircraft may be made to dive or climb abruptly or to take an angular course in any desired direction without discomfort to the pilot.

It should be understood that the specific structure shown in the drawings is illustrative only, many forms of construction being suitable for such an aircraft.

Although the present disclosure specifically describes an aircraft, the principle of rotating that portion of the body of a powered vehicle containing the propulsion means is equally applicable to other vehicles such as surface or underwater vessels. Furthermore, the propulsion motors may be installed in either the upper or lower portion of the body without departure from the scope of the invention, the actual arrangement being dependent on the particular vehicle and its purpose.

The operation of this invention will be clearly comprehended from a consideration of the foregoing description of the mechanical details thereof, taken in connection with the drawings and the above recited objects. It will be obvious that all said objects are amply achieved by this invention.

Further description would appear to be unnecessary.

It is understood that minor variation from the form of the invention disclosed herein may be made without departure from the spirit and scope of the invention disclosed herein, and that the specification and drawings are to be considered as merely illustrative rather than limiting.

I claim:

1. In an aircraft of generally circular form, a lower portion, an upper portion rotatably adjustably mounted on said lower portion, propulsion means in said upper portion, means for rotating said upper portion to alter the direction of propulsive thrust, and means tending to hold said lower portion against shifting in relation to the direction of motion of the aircraft while said upper portion is rotated.

2. In an aircraft of generally circular form, a lower portion, an upper portion rotatably adjustably mounted on said lower portion, propulsion means in said upper portion, means for rotating said upper portion to alter the direction of propulsive thrust, means tending to hold said lower portion against shifting in relation to the direction of motion of the aircraft while said upper portion is rotated, and means for locking said upper portion against rotative movement relative to the lower portion.

3. In an aircraft of generally circular form, a lower portion, an upper portion rotatably adjustably mounted on said lower portion, rearwardly thrusting propulsion motors in said upper portion, means for rotating said upper portion to alter the direction of propulsive thrust, a stabilizing fin on said lower portion to bias the same against shifting in relation to the direction of motion of the aircraft while said upper portion is rotated, and means for locking said portions against relative rotation.

4. In an aircraft of generally circular form, a lower portion, an upper portion rotatably adjustably mounted on said lower portion, said lower and upper portions together constituting an aerodynamic lifting surface, rearwardly thrusting propulsion motors in said upper portion, means for rotating said upper portion to alter the direction of propulsive thrust, a stabilizing fin on said lower portion to bias the same against shifting in relation to the direction of motion of the aircraft while said upper portion is rotated, and means for locking said portions against relative rotation.

5. In an aircraft of generally circular form, a lower portion, an upper portion rotatably adjustably mounted on said lower portion, said lower and upper portions together constituting an aerodynamic lifting surface, rearwardly thrusting propulsion motors in said upper portion, pivotal fin means on said upper portion for rotating the same to alter the direction of propulsive thrust, a stabilizing fin on said lower portion to bias the same against shifting in relation to the direction of motion of the aircraft while said upper portion is rotated, and means for locking said portions against relative rotation.

6. In an aircraft of generally circular form, a lower portion, an upper portion rotatably adjustably mounted on said lower portion, said lower and upper portions together constituting an aerodynamic lifting surface, rearwardly thrusting propulsion motors in said upper portion, pivotal fin means on said upper portion for rotating the same to alter the direction of propulsive thrust, a stabilizing fin on said lower portion to bias the same against shifting in relation to the direction of motion of the aircraft while said upper portion is rotated, means for locking said portions against relative rotation and hinged control surfaces in said lower portion for rolling and pitching control of the aircraft about its longitudinal and lateral axes, respectively.

7. In an aircraft of generally circular form, a lower portion, an upper portion adjustably rotatably mounted on said lower portion, rearwardly thrusting propulsion motors in said upper portion, pilot actuated controls in said upper portion, pivotal fin means on said upper portion, actuating means operatively connecting said controls to said fins for rotating the same whereby said upper portion is rotated to alter the direction of propulsive thrust, a stabilizing fin on said lower portion to bias the same against rotation relative to the direction of motion of the aircraft while said upper portion is rotated, and means for locking said portions against relative rotation.

8. In an aircraft of generally circular form, a lower portion and an upper portion, an annular bearing rotatably interconnecting said upper and lower portions, rearwardly thrusting propulsion motors in said upper portion, pilot actuated controls in said upper portion, pivotal fin means on said upper portion, actuating means operatively connecting said controls to said fins for rotating the same whereby said upper portion is rotated to alter the direction of propulsive thrust, a stabilizing fin on said lower portion to bias the same against rotation relative to the direction of motion of the aircraft while said upper portion is rotated, and means for locking said portions against relative rotation.

9. An aircraft according to claim 8 and including a driven roller in said bearing, and a motor operatively connected to said driven roller to rotate said upper portion relative to said lower portion.

10. An aircraft according to claim 3 and including a steerable landing wheel in said fin, and a main aircraft supporting landing gear in said lower portion.

11. An aircraft according to claim 8 wherein said locking means comprises a frictional brake engaging said bearing.

12. In an aircraft of generally circular form, a lower portion, an upper portion rotatably adjustably mounted on said lower portion, rearwardly thrusting jet propulsion motors in said upper portion, an air intake duct in said lower portion, a plenum chamber at the axis of rotation of said upper portion, said plenum chamber comprising a lower chamber communicating with said air intake duct and an upper chamber communicating with said motors, and an annular bearing interconnecting said lower and upper chambers in substantially sealed relation, means for rotating said upper portion to alter the direction of propulsive thrust, and means tending to hold said lower portion against shifting in relation to the direction of motion of the aircraft while said upper portion is rotated.

13. An aircraft according to claim 1 and including a pilot's cockpit in said upper portion at the axis of rotation thereof, a control pedestal pivotally mounted in said cockpit, and a seat on said control pedestal.

14. In a vehicle, a body having a lower portion, and an upper portion rotatably mounted on said lower portion, means for rotating one of said portions relative to the other of said portions, propulsion means in one of said portions, and means for biasing the other of said portions against rotation relative to the direction of motion of the

206 || @HighEarthOrbit_ linktr.ee/Grider2

vehicle while the portion containing said propulsion means is rotating.

15. An aircraft of generally circular form, comprising two portions mounted for rotative adjustment relative to each other, propulsion means in one of said portions, and means for maintaining the other of said portions substantially in alignment with the direction of flight while the portion containing said propulsion means is rotatively adjusted.

References Cited in the file of this patent

UNITED STATES PATENTS

D. 162,560	Miller	Mar. 20, 1951
1,585,281	Craddock	May 18, 1921
2,567,392	Naught	Sept. 11, 1951
2,619,302	Loedding	Nov. 25, 1952

FOREIGN PATENTS

1,018,196	France	Oct. 8, 1952

Sept. 24, 1957 M. WIBAULT 2,807,428

AIRCRAFT WITH ENCLOSED ROTOR

Filed July 15, 1953 4 Sheets-Sheet 1

Fig. 1

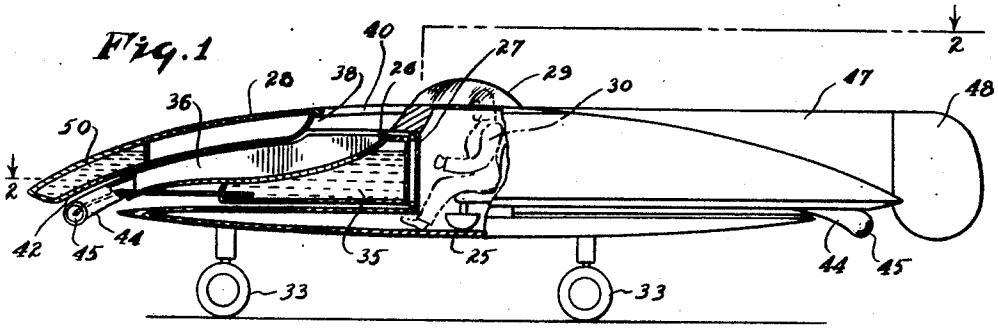

Fig. 2

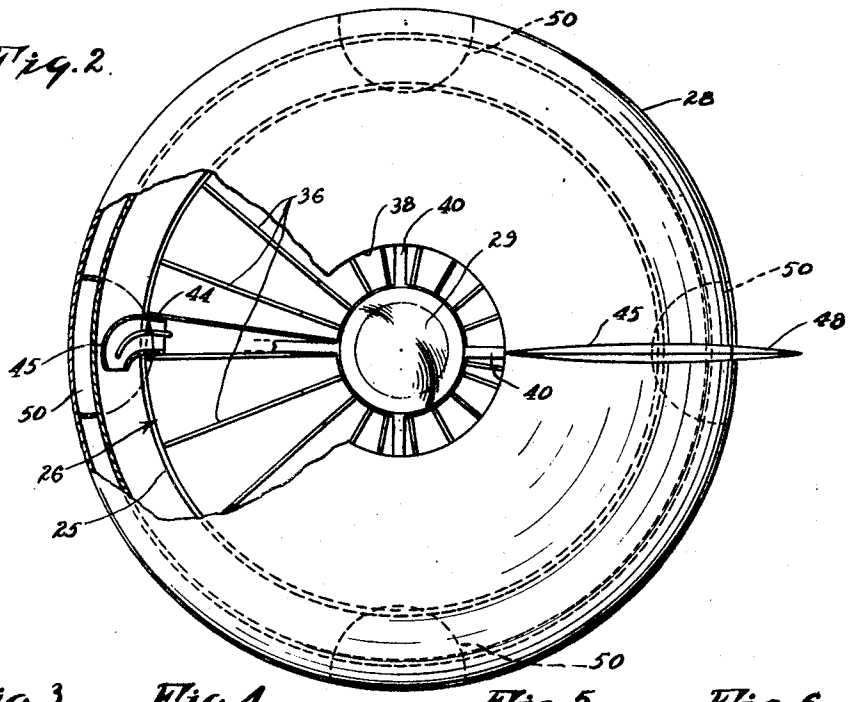

Fig. 3

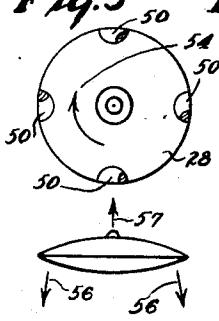

Fig. 4

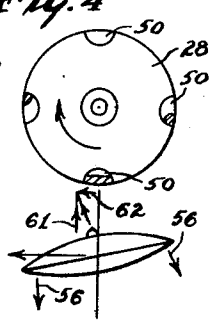

Fig. 5

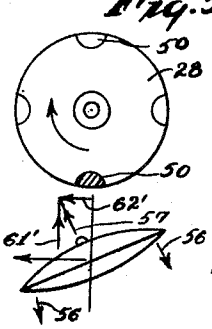

Fig. 6

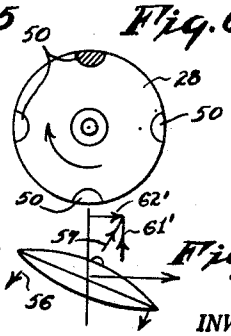

Fig. 7

Fig. 8

Fig. 9

Fig. 10

INVENTOR.

BY Michael Wibault

Emery Vanney

Whittemore & Dix

ATTORNEYS

Sept. 24, 1957 M. WIBAULT 2,807,428

AIRCRAFT WITH ENCLOSED ROTOR

Filed July 15, 1953 4 Sheets-Sheet 2

Fig. 11

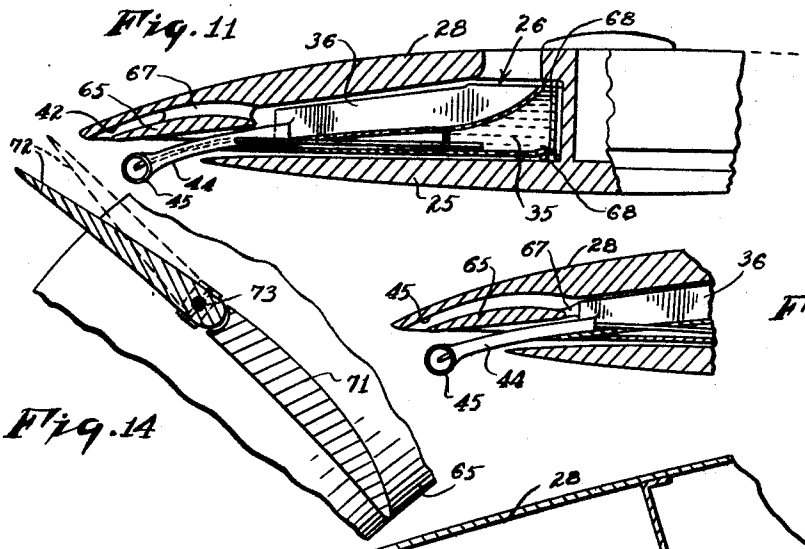

Fig. 12

Fig. 14

Fig. 13

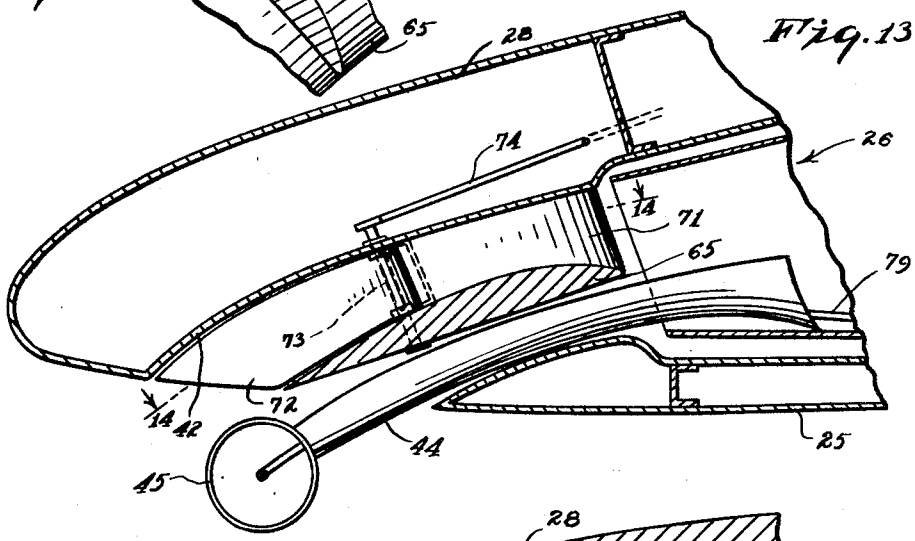

Fig. 15

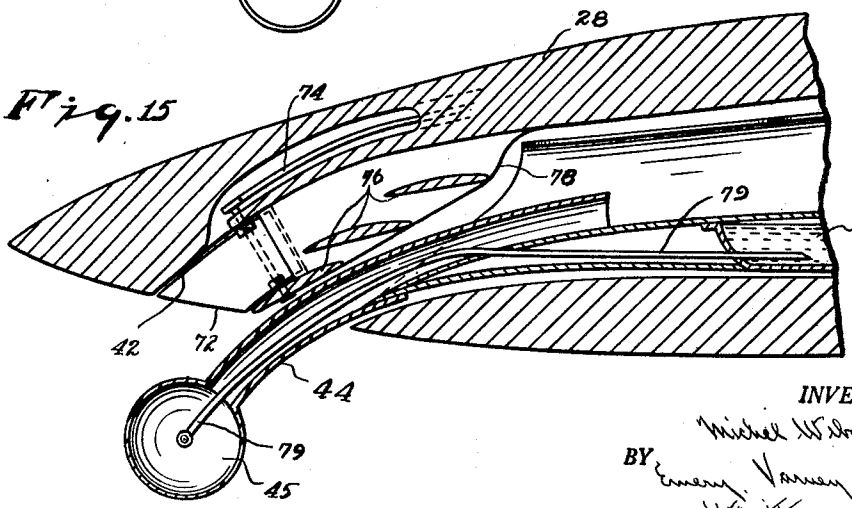

INVENTOR.
Michael Wibault
BY Emery Varney
Whittemore & Pine
ATTORNEYS

Sept. 24, 1957 M. WIBAULT 2,807,428

AIRCRAFT WITH ENCLOSED ROTOR

Filed July 15, 1953 4 Sheets-Sheet 3

Fig. 16

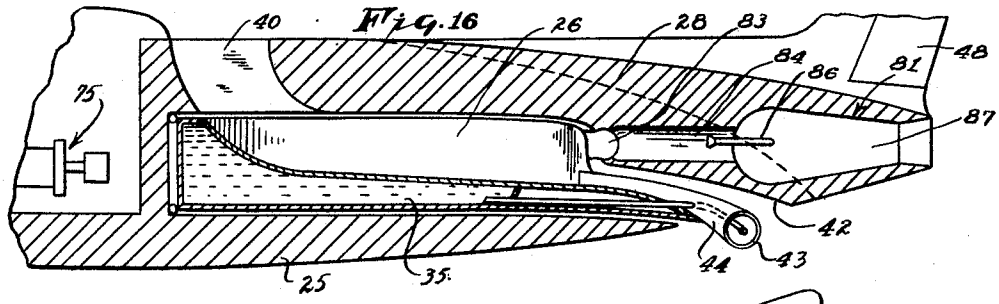

Fig. 17

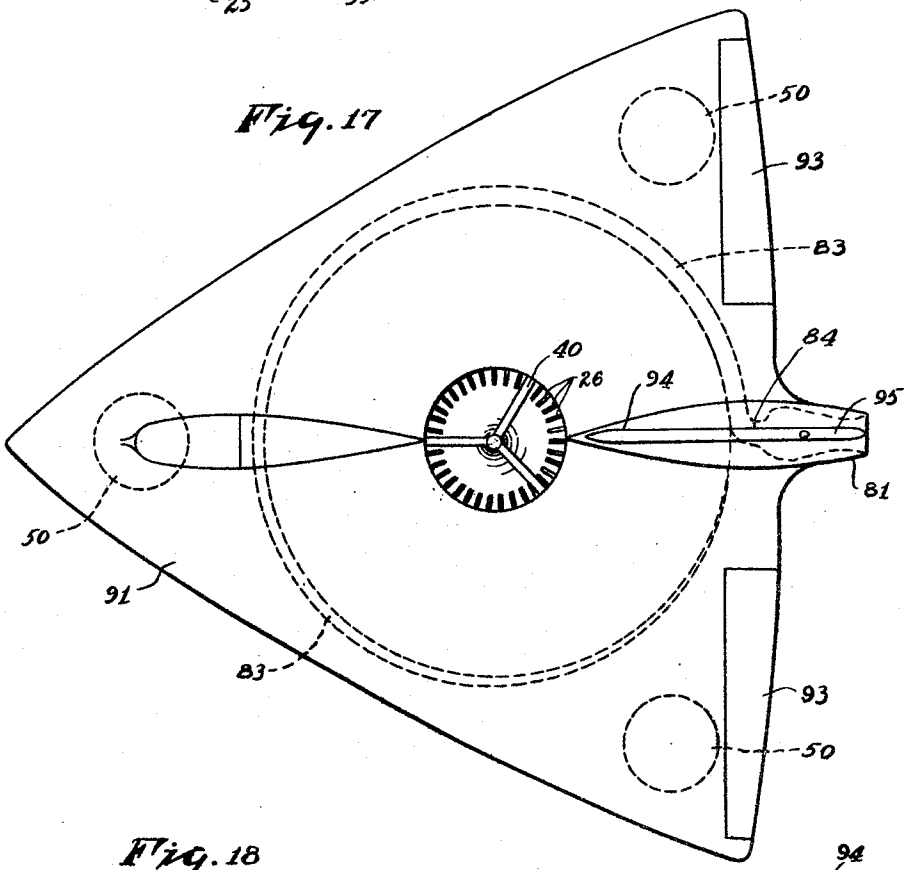

Fig. 18

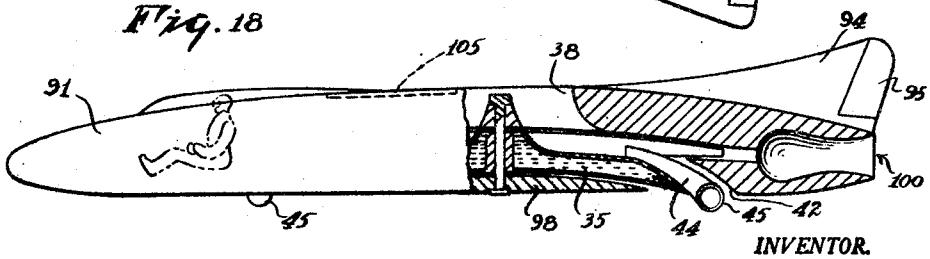

INVENTOR.
Michel Wibault
BY Emery, Varney, Whittemore & Dix
ATTORNEYS

Sept. 24, 1957 M. WIBAULT 2,807,428

AIRCRAFT WITH ENCLOSED ROTOR

Filed July 15, 1953 4 Sheets-Sheet 4

Fig. 19

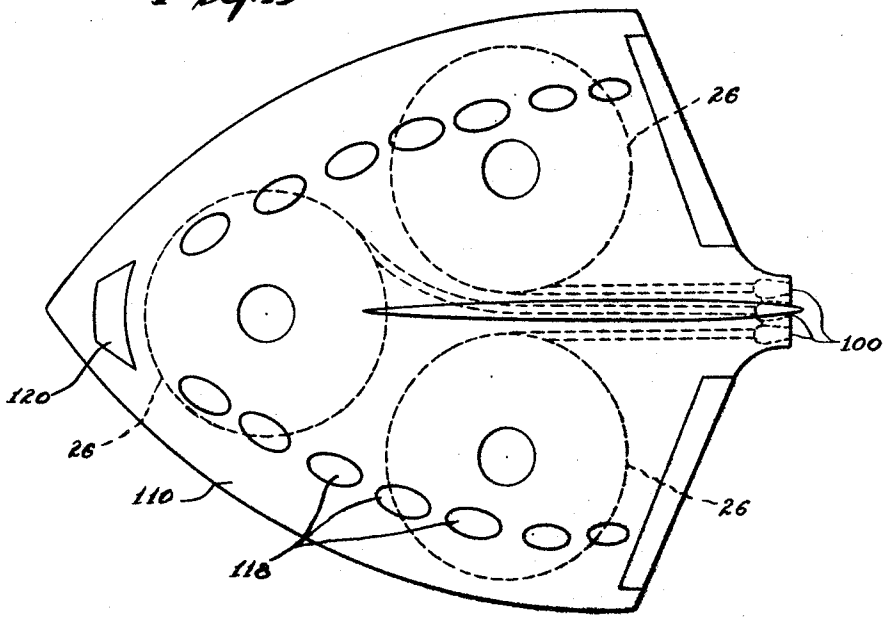

Fig. 20

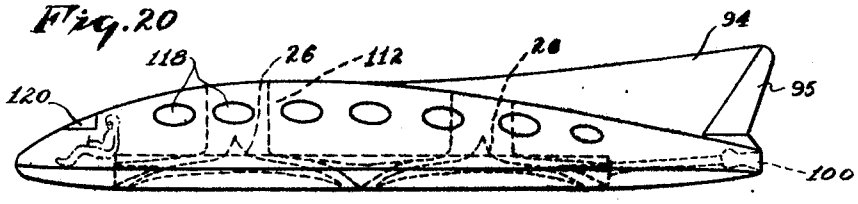

Fig. 21

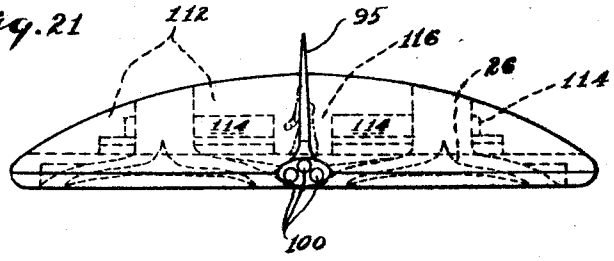

INVENTOR.
Michel Wibault
BY Emery, Varney, Whittemore & Dix
ATTORNEYS

211 || @HighEarthOrbit_ linktr.ee/Grider2

United States Patent Office

2,807,428

Patented Sept. 24, 1957

1

2,807,428

AIRCRAFT WITH ENCLOSED ROTOR

Michel Wibault, New York, N. Y., assignor to Vibrane Corporation, New York, N. Y., a corporation of New York

Application July 15, 1953, Serial No. 368,046

22 Claims. (Cl. 244—23)

This invention relates to heavier-than-air aircraft and pertains to a novel type of aircraft which I refer to as a "Gyropter," and which possesses the flying characteristics of both the airplane and the helicopter.

The airplane and the helicopter each have specific advantages and disadvantages which are inherent in and peculiar to their types. For example, the airplane can be driven at very high speeds, but as higher and higher speeds have been achieved, wing surface areas have been reduced and wing loadings have been increased with the result that with planes designed for supersonic speeds, critical stalling speeds are very high, and large landing fields with extremely long runways are required for safety in take offs and landings. It is impossible, of course, for the airplane to rise or descend vertically or to hover.

The latter are the great virtues and advantages of the helicopter. But the great disadvantage of the helicopter is its inherent limitation in speed. When a single rotor helicopter is ascending or descending vertically, the center of lift is at or near the axis of rotation of the winged rotor. As the helicopter begins to advance in a horizontal direction, however, the center of lift shifts away from the axis of rotation and as forward speed increases, the center of lift moves further and further away from the axis of rotation, until at some critical speed the helicopter will capsize. Multiple rotors have been used in an effort to overcome this difficulty, but multiple rotors introduce other difficulties.

Aircraft according to the present invention comprise essentially a rotor mounted on and entirely enclosed within upper and lower interconnected stator elements which carry one or more annular airfoils extending around the periphery of the rotor. The rotor is mounted for rotation on a vertical axis and is preferably in the nature of a large centrifugal blower. The upper stator is provided with an intake opening preferably near or surrounding the axis of rotation of the rotor, and the rotor is provided with blades or other means, such as discs, which accelerate the air and discharge it outwardly from the periphery in a substantially horizontal direction, or at an angle producing a downwash which generates a component of vertical lift. The annular airfoils which surround the periphery of the rotor are located in the path of the air discharged from the rotor, being so arranged that the resultant of the aerodynamic forces acting thereon exerts vertical lift. Since the airfoils are entirely within and enclosed by the upper and lower stators, they are thereby protected from the influence of air currents resulting from horizontal motion of the aircraft. Consequently, there is no shift of the center of lift as horizontal speed increases.

The rotor may be driven in any suitable manner, but is preferably driven by one or more jet reactors in order to eliminate torque which would be present if the rotor were driven by a source of power located on the stators. Any tendency of the stators to rotate due to air friction or drag or to mechanical friction in the bearings between rotor and stators may be corrected aerodynamically by

2

airfoils, preferably adjustable, located in the path of the air discharged from the rotor. Alternatively, it may be corrected gyroscopically, or, after the aircraft attains sufficient horizontal speed, by fins and/or rudders on the stators.

The aircraft may be propelled horizontally in a variety of ways. For example, the gyroscopic action of the rotor may be utilized to produce a tilt of the aircraft through which moderate horizontal speeds can be obtained. This can also be obtained by conventional aerodynamic controls connected with the stators, or by changing the angle of sectors of the lift ring or rings, or also by strangling sectors of the streams of air passing to the rotor or the lift rings. The aircraft will then move horizontally in the direction of the tilt. Alternatively or supplementally the aircraft may be propelled by propellors, jet reactors or any other suitable means mounted on the stators.

In applying the principles of the invention to aircraft of large size, it will be found to be advantageous to utilize multiple rotors rather than to attempt to utilize a single rotor of very large diameter. In such cases by suitable choice of location and direction of rotation of the rotors, any tendency of the stators to rotate may be largely eliminated.

The outside configuration of the stators may be varied depending on the size of the aircraft and the type of service for which it is designed. In the case of small single rotor aircraft, the stator assembly may be in the shape of a disk, thin at its peripheral edges and thickened toward the center. Alternatively, and more particularly in the case of high speed ships, the stator assembly is preferably in the form of a wing. In such cases, once the aircraft is off the ground and propelled horizontally at sufficient speed, the aerodynamic lift of the wing may be used to supplement the lift of the annular airfoil, or in some cases may supersede it entirely. In the latter case, doors are used to obstruct the air inlet of the rotor in order to prevent any exchange of pressure between the upper and lower parts of the stator. In the latter event the lift of the annular airfoil would be used only in ascending from or descending to an airfield.

It will be observed, therefore, that the aircraft of the present invention combines many of the advantages of the airplane and the helicopter while eliminating some of the disadvantages of each. Thus, it can ascend and descend vertically and it can hover, but it can also move horizontally at very high speeds. It is more stable in flight than either the airplane or the helicopter because of the gyroscopic effect of the rotor.

Other objects and advantages of the invention will appear hereinafter.

A preferred embodiment of the invention selected for purposes of illustration are shown in the accompanying drawings, in which,

Fig. 1 is a diagrammatic, side elevation, partly broken away and in section, showing a simple aircraft embodying this invention;

Fig. 2 is a top plan view partly broken away and in section, of the aircraft shown in Fig. 1;

Figs. 3, 4, 5 and 6 are diagrammatic, reduced scale, top plan views, showing the way in which the ballast is distributed for controlling the trim of the aircraft;

Figs. 7, 8, 9 and 10 are diagrammatic side elevations showing the trim of the aircraft with the ballast distributed as in Figs. 3, 4, 5 and 6, respectively;

Fig. 11 is a view similar to Fig. 1 but showing a first modified form of the invention;

Fig. 12 is a fragmentary detail view showing a second modification of the invention;

Fig. 13 is an enlarged, fragmentary, vertical, sectional

212 || @HighEarthOrbit_ linktr.ee/Grider2

view showing the air flow to the reactor jet and the air flow to the anti-rotational fins;

Fig. 14 is a top plan view of one of the anti-rotational fins shown in Fig. 13;

Fig. 15 is an enlarged, vertical, sectional view showing a third modified form of the invention;

Fig. 16 is a vertical, sectional view showing jet propulsion means for obtaining horizontal flight;

Fig. 17 is a top plan view of a fourth modified form of the invention in which the upper stator is in the form of a delta wing;

Fig. 18 is a side elevation, partly broken away and in section of the aircraft shown in Fig. 17;

Fig. 19 is a top plan view of a fifth modified form of the invention in which a plurality of rotors are used in a single stator which is shaped as a cambered wing;

Fig. 20 is a side elevation of the modified form of aircraft shown in Fig. 19; and

Fig. 21 is a rear elevation of the aircraft shown in Figs. 19 and 20.

In its simplest form the aircraft of this invention includes a lower stator **25**, a rotor **26** rotatably mounted on a central hub **27**, and an upper stator **28**. The stators **25** and **28** are rigidly connected by the hub **27**. The hub **27** is hollow and may be of substantial internal diameter to provide accommodations for passengers and freight. In the construction shown, there is a transparent turret **29** at the top of the hub **27** providing visibility for a pilot **30**.

The bottom stator **25** has wheels **33** and such other landing gear structure as may be desirable. The rotor **26** has a hollow hub portion which serves as a fuel tank **35**. This tank is preferably sectional or provided with anti-surge partitions. Above the fuel tank **35**, the rotor **26** has blades **36** extending radially. In the construction shown in Figs. 1 and 2, the blades **36** extend along radii of the rotor, but the radially extending blades may slope in the direction of, or against the direction of rotation in accordance with conventional practice of centrifugal blowers. There is a wide annular opennig **38** in the upper stator **28** above the inner ends of the blades **36**; and air is drawn downwardly through this air inlet opening **38** by the rotor **26** which operates as a centrifugal blower.

There are spars **40** extending across the air inlet opening **38** for rigidly connecting together the portions of the stator **28** which are on opposite sides of the air inlet opening **38**. These spars **40** are preferably streamlined so as to offer a minimum of resistance to the flow of air to the rotor **26**.

The upper stator **28** extends across the top of the rotor **26** with a running clearance. In the structure illustrated, the peripheral portion of the upper stator **28** extends beyond the ends of the rotor blades **36**. The lower surface of the upper stator **28**, beyond the blades **36**, provides an annular surface which serves as a liftring for the aircraft. This annular surface or liftring, designated by the reference character **42**, slopes downwardly so that it deflects the air from the rotor **26**, and this deflecting of the air provides an upward thrust for lifting the aircraft. When the surface above the blades has a downward slope, the pressure of the air stream against this surface develops a component of lift.

The space between the peripheral portions of the lower stator **25** and upper stator **28** is open around the entire aircraft to provide running clearance for arms **44** which project from diametrically opposite locations, on the rotor **26**, beyond the lower stator **25** and into the ambient atmosphere below the aircraft. There is a jet reactor **45** connected to the outer end of each of the arms **44**, and these reactors **45** drive the rotor **26**.

Fuel for the reactors **45** is supplied by centrifugal force from the fuel tank **35** in the rotor. These reactors **45** are used in the preferred embodiment of the invention because they provide simple and reliable means for driving the rotor without gearing or other mechanism having moving parts. In the broader aspects of the invention, however, the reactors **45** are merely representative of power means for turning the rotor **26** to draw air through the inlet opening **38** and to discharge the air against the liftring **42**, or any of the other liftring constructions which will be described in connection with certain modified forms of the invention.

The upper stator **28** has a fin **47** and rudder **48** at its rearward end. There are a plurality of ballast tanks **50** located at angularly spaced regions around the peripheral portion of the upper stator **28**. The construction illustrated has four ballast tanks **50**. These are sufficient for controlling the trim of the aircraft, in a manner which will be described, but more than four tanks can be used if desired. There are conduits connecting the ballast tanks **50** and pumps or other suitable means for moving liquid ballast from one tank to another.

From the construction thus far described it will be apparent that the aircraft shown in Figs. 1 and 2 is capable of vertical ascent and hovering in the same manner as a helicopter because its lift does not depend upon horizontal speed. The aircraft can also move horizontally in a manner similar to a helicopter, if the nose of the aircraft is tilted downwardly so that the annular current of air, discharged by the rotor around the entire periphery of aircraft, has a net rearward component. In horizontal flight, however, the aircraft of this invention does not experience any change in the center of lift, as in the case of a helicopter, because the rotor **26** is entirely enclosed within the housing provided by the stators. The operation of the enclosed rotor is just the same with the aircraft moving horizontally as when the aircraft is hovering or moving vertically.

Fig. 3 shows the rotor turning in a clockwise direction, as indicated by the arrow **54**, and ballast equally divided among all of the tanks **50**. With the aircraft symmetrically loaded, as indicated in Fig. 3, the axis of the aircraft is substantially vertical and the thrust reaction from the liftrings is symmetrical about a vertical axis as indicated by the arrows **56** in Fig. 7. The axial thrust of the aircraft is directly vertical as indicated by the axial vector **57**.

Since the rotor **26** acts as a large gyroscope, any pressure tending to tilt the gyroscope downwardly at the right side of the aircraft will cause the gyroscope to tilt its axis rearwardly. This phenomenon by which force at one side of a gyroscope causes the axis to tilt 90° out of phase with the applied force is a well known property of gyroscopes. The present invention takes advantage of this phenomenon by shifting the ballast from the right hand tank **50** to the left hand tank **50**, as shown in Fig. 4, when it is desirable to tilt the nose of the aircraft downward for forward flight as shown in Fig. 8.

With the aircraft tilted as shown in Fig. 8, the annular air stream **56** has a rearward component, and the axial vector **57** slopes at an angle to the vertical so that it has vertical and horizontal components, indicated by the vectors **61** and **62**, respectively, and the aircraft moves in a forward direction.

For greater forward speed, the aircraft can be tilted still further, as shown in Figs. 5 and 9. This is done by shifting all of the ballast into the right hand tank **50**. The axial thrust component **57** has a greater slope to the vertical and thus produces a horizontal vector **62'** which is greater than the vector **62**, and a lift vector **61'** which is somewhat less than the lift vector **61** in Fig. 8. An increase in the speed of the rotor will compensate the reduction of the lift vector **61'** in order to keep the same altitude of flying.

Figs. 6 and 10 are similar to Figs. 5 and 9 except that the entire ballast is shifted to the right hand tank **50** and the direction of movement of the aircraft is rearward instead of forward. The vectors are indicated by

213 || @HighEarthOrbit_ linktr.ee/Grider2

the same reference characters as in Fig. 9 and the only difference is that the horizontal vector **62'** is toward the rear instead of toward the front. It will be understood that if the rotor **26** were turning in the opposite direction to that indicated in Fig. 6, that is, were turning in a counter-clockwise direction, loading of the right hand ballast tank **50** would tilt the aircraft forwardly instead of rearwardly.

The examples shown in Figs. 3 to 10 are believed to be sufficient to illustrate the way in which trim and direction of travel of the aircraft can be statically controlled. When high speed forward movement is desirable, other power means in addition to the thrust from the rotor are used as will be explained in connection with Fig. 16.

Fig. 11 shows a first modified form of the invention in which a liftring **65** is located some distance below the liftring surface **42** of the upper stator **28**. This liftring **65** is an airfoil section which is similar, in radial cross section, to a cambered airplane wing, but the liftring **65** is annular and it acts as an airplane wing of the infinite aspect ratio. The liftring **65** is connected to the upper stator **28** by vanes **67**.

This construction with a liftring **65** in addition to the liftring surface **42** utilizes the airstream from the rotor **26** more efficiently; and the liftring **65** is shaped to take advantage of the Bernoulli effect in obtaining increased lift from the liftring **65**.

Fig. 12 shows a second modified construction in which the liftring **65** is attached to the rotor **26**, by vanes **67**, instead of being attached to the upper stator **28**. With this construction, the liftring **65** tends to lift the rotor **26** and this lift is transmitted to the aircraft through an upward thrust bearing at the center hub of the rotor, such as the upper thrust bearing **68** shown in Fig. 11. The rotor **26** of Fig. 11 is shown with thrust bearings **68** at both ends of its hub to provide against end play. All of the rotor bearings shown in the drawing are diagrammatic and it will be understood that all of them have provision for preventing excessive end play. In Fig. 12, the upper stator **28** still provides lift because of the reaction of the air stream against the liftring surface **42**.

Fig. 13 shows a construction which is similar to Fig. 11, but with a somewhat different construction for the vanes which connect the liftring **65** to the upper stator **28**. In Fig. 13, vanes **71** extend at a tangential slope to the direction of discharge of the air stream from the rotor **26**. This slope of the vanes **71** is calculated to produce a torque for the upper stator **28** equal and opposite to the torque which results from air friction and friction of the rotor on the hub bearing. When the aircraft has no horizontal movement for making its fin and rudder effective, and no other means are provided to counteract the effect, there is a tendency for the stators to gradually assume a rotation in the same direction as the rotor. This results not only from mechanical friction of the rotor on the stator hub, but also from a component of movement of the air stream tangentially discharged by the rotor.

Since the tendency of the stators to pick up rotation from the rotor varies with the speed of rotation, the slope of the vanes **71** will exactly compensate at only one rotor speed. For this reason, the vanes **71** are preferably made with tail portions **72** pivoted to the forward portion of the vanes at **73**. These tail portions **72** are similar to rudders in an air stream, and they shift one way or another to control the tangential thrust of the air stream against the vanes **71** so as to compensate fully any tendency of the stators to pick up the rotation from the rotor. The tail portions **72** are operated by tillers **74** through control cables or other motion transmitting connections operated by the pilot.

Another way in which rotation of the stators can be prevented is by providing a gyroscope **75** (Fig. 16) carried by the stator assembly with the axis of rotation of the gyroscope **75** extending in a direction transverse of the direction of the rotor axis.

Fig. 15 shows a third modification of the construction in which there are a plurality of liftrings **76** spaced from the liftring surface **42** of the upper stator **28**, and from each other. These liftrings **76** are connected to the upper stator **28** by vanes **78**.

Fig. 15 also shows the way in which a portion of the air from the rotor **26** is supplied through the hollow interior of the arm **44** to the jet reactor **45**. The fuel from the tank in the rotor flows to the reactor through a fuel pipe **79**.

Fig. 16 shows the upper stator **28** equipped with a jet reactor **81** at the rearward end of the aircraft. A portion of the air from the rotor **26** is blown into a collector **83** and this air flows through a passage **84** to the combustion chamber of the reactor **81**. This air is mixed with fuel from a fuel pipe **86** which delivers a jet of liquid fuel against the air current for atomization. The air fuel mixture burns in a combustion chamber **87** and is discharged rearwardly to provide a propulsion jet for driving the aircraft through the air in a horizontal direction. When the aircraft is travelling at high speed in a horizontal direction, and the air delivered by the rotor is not to be used for lift, the entire output of air from the rotor can be delivered to the jet reactor by having a retractable collector **83** that can be dropped down into position to block the flow of air to the lift rings and divert all of the air to the reactor.

With a propulsion jet reactor **81** to drive the aircraft, it is not necessary to tilt the aircraft for developing a horizontal component from the rotor discharge. However, the propulsion jet reactor **81** can be used in addition to any horizontal component developed by tilting of the aircraft.

When very high horizontal speed is desired, one or more powerful propulsion jet reactors **81** are used and the tilting of the aircraft is not relied upon for horizontal flight because the drag is somewhat increased by any tilting of the aircraft with a resulting increase in the front profile of the upper stator.

Fig. 17 shows a fourth modification of the invention in which the rotor is placed in a wing **91**. This wing **91** has ailerons **93**, a fin **94** and a rudder **95**. The wing is an upper stator of the aircraft, and there is a lower stator **98** which functions in the same way as the other modifications of the invention. There is a propulsion jet reactor **100** at the trailing edge of the wing **91** and this jet reactor **100** is supplied with air from the rotor in the same manner as already described in connection with Fig. 16.

The wing **91** has a number of advantages over the simpler upper stator **28** when high horizontal speed is desired and when the aircraft is designed for greater carrying capacity. The wing **91** has a shape of delta wings which are designed for high speed jet planes, and the rotor **26** enclosed within the wing offers no additional drag when the aircraft is traveling at high horizontal speed.

With the modification of the invention shown in Fig. 17, the rotor **26** can be used for vertical ascent, and when the aircraft has assumed sufficient horizontal speed to derive ample lift from the wing **91**, the rotor **26** can be shut off, if other means are available to supply air to the jet reactor **100**. The aircraft is then operated entirely as a jet plane. A slide or door **105** can be used to cover the air inlet opening **38** during high speed horizontal flight, and provision can be made for moving the reactors **45** up into the wing in the same manner as retractable landing gear. The annular discharge space between the upper and lower stators can be closed, if desired, in a manner similar to the way in which slot controllers are used with conventional aircraft.

Fig. 19 shows a fifth modification of the invention in

214 || @HighEarthOrbit_ linktr.ee/Grider2

which a plurality of rotors **26** are enclosed within a large wing **110**. This fifth modification differs from that shown in Fig. 17 principally in the size of the wing and in the use of more than one rotor **26**.

In the case of multi-rotor aircraft, such as shown in Fig. 19, the gyroscope effects of the rotors compensate themselves and the normal conditions of static and aerodynamics controls takes place.

Three jet reactors **100** are provided for propelling the aircraft shown in Fig. 19. Each of these reactors is supplied with air from a different one of the rotors **26**. The wings **91** and **110**, shown in Figs. 17 and 19 have the advantage of providing space beyond and above the rotors for the accommodation of passengers and freight. The wing **19** has an extensive cabin **112** above the rotors, seats **114** and a center aisle **116**. The cabin has windows **118**, throughout its length and the pilot is located in the nose of the wing **110** with a window **120** providing good visibility to the front and sides.

The preferred embodiments, and some modifications of the invention have been illustrated and described, but other modifications can be made without departing from the invention as defined in the claims.

I claim:

1. A heavier-than-air aircraft comprising, in combination, a stator assembly comprising spaced upper and lower interconnected stator elements, a rotor mounted on said stator assembly for rotation on a vertical axis, said rotor being located between said stator elements and in a chamber formed thereby, means on said rotor for discharging air outwardly from the periphery of the rotor in a substantially horizontal direction, and an annular air foil surrounding the periphery of said rotor and having a surface lying in the path of said air and curving downwardly and forming the upper surface of an opening through the bottom of the aircraft.

2. An aircraft including an upper stator having an opening for the downward flow of air, a lower stator rigidly connected to the upper stator, a rotor housed between the stators and having radially extending blades in position to draw air downwardly through the opening in the upper stator and to discharge the air outwardly, and a lift ring surface below the upper stator and forming the upper surface of an opening through the bottom of the aircraft.

3. An aircraft comprising a rotor housed between upper and lower stators, the upper stator having an opening therethrough above the center of the rotor, and the rotor having blades that draw air through the opening and discharge it radially, and an annular lift ring surface under a portion of the upper stator beyond the peripheral limit of the rotor and forming the upper surface of an opening through the bottom of the aircraft.

4. The aircraft described in claim 3 with a jet reactor connected to the rotor by a support which extends from the rotor outwardly and downwardly to a location below the lift ring.

5. An aircraft comprising a stator assembly, a rotor housed within the stator assembly, the rotor comprising a centrifugal blower having blades that draw air downwardly through an opening in the stator assembly, and that discharge the air by centrifugal force outwardly, an annular air foil attached to the stator assembly, and in the air stream and curving downwardly and forming the upper surface of an opening through the bottom of the aircraft and power driving mechanism connected to the rotor for turning it.

6. An aircraft comprising a stator assembly, a power-driven rotor housed within the stator assembly, the rotor having a hub portion that turns on a bearing in the stator assembly about an axis extending substantially vertically, and the rotor having radially extending blades that draw air downwardly through an opening in the stator assembly around the hub portion of the rotor, and that discharge the air radially outward, power driving mechanism for turning the rotor, and a lift ring comprising an annular air foil connected to the stator assembly in the air stream discharged by the rotor, and curving downwardly and forming the upper surface of an opening through the bottom of the aircraft.

7. An aircraft including a stator assembly, a rotor comprising a centrifugal blower having a hub portion that rotates on a bearing, carried by the stator assembly, about a substantially vertical axis, radially extending blades of the rotor completely housed within the stator assembly in position to draw air downwardly through an opening in the stator assembly, said stator assembly having an annular outlet passage extending from adjacent the circumference of the rotor and downwardly and outwardly from the rotor with the upper wall of the annular passage serving as a lift ring surface against which the blast of air from the rotor is directed to impart lifting force to the aircraft the surface of the lift ring curving downwardly and forming the upper surface of an opening through the bottom of the aircraft, and power driving mechanism for the rotor.

8. The aircraft described in claim 7, characterized by a second lift ring including an annular air foil located between the upper and lower walls of the outlet through which the air from the rotor is discharged, the second lift ring being connected to the stator assembly above it by vanes that hold the second lift ring in a predetermined spaced relation to the top wall of the opening.

9. An aircraft comprising a stator assembly with a chamber therein, a rotor enclosed within the chamber, the rotor comprising a centrifugal blower with a hub portion that turns about a substantially vertical axis and on bearings carried by the stator assembly, the rotor also having radially extending blades which rotate between upper and lower walls of the chamber provided by the stator assembly, power driving mechanism for the rotor, the stator assembly having an inlet opening above the hub portion of the rotor in position to supply air to the blades, and having also an annular outlet opening extending outwardly and downwardly from a region beginning at the outer limits of the blades, and at least one annular lift ring attached to the blades and located in the air outlet of the stator assembly and in the air stream from the rotor, the surface of the lift ring curving downwardly and forming the upper surface of an opening through the bottom of the aircraft.

10. An aircraft comprising a stator assembly having a chamber therein with a central opening at the top and an annular lower opening with a lift ring surface therein, the surface of the lift ring curving downwardly and forming the upper surface of an opening through the bottom of the aircraft a rotor housed within the chamber and comprising a centrifugal blower with a hub portion that turns on a bearing on the stator assembly about a substantially vertical axis and that has radially extending blades which propel a stream of air from the central opening through the lower annular opening, fuel tanks within the hub portion of the rotor, and power driving means for the rotor including a jet reactor connected to the rotor by a frame extending from the blades outwardly and downwardly through the annular lower opening so as to locate the reactor in the ambient atmosphere below the aircraft, and a fuel line through which fuel is supplied from the tanks to the jet reactor by centrifugal force.

11. An aircraft comprising a stator assembly having a chamber therein with a central upper opening and an annular lower opening, a rotor enclosed within the chamber and comprising a centrifugal blower with radially extending blades to draw air from the upper opening and discharge it downwardly and outwardly through the annular lower opening, power driving mechanism for the rotor including a jet reactor connected to the rotor by a support extending inwardly and upwardly from the jet reactor and to the rotor, and a lift ring comprising an annular air foil in the path of the air stream discharged

215 || @HighEarthOrbit_ linktr.ee/Grider2

by the rotor, the surface of the lift ring curving downwardly and forming the upper surface of an opening through the bottom of the aircraft.

12. An aircraft as described in claim 11 characterized by a lift ring which is an annular air foil spaced from the walls of the annular opening, and further characterized by vanes extending upwardly in the path of the air stream through the lower annular opening, said vanes extending at acute angles to radii from the axis of rotation of the rotor in directions to deflect the air stream from the rotor at an angle which produces a reaction counter to the direction of rotation of the rotor for preventing the stator assembly from turning in the same direction as the rotor.

13. An aircraft comprising a stator assembly having a rotor chamber therein with a central upper opening and a downwardly and outwardly extending lower annular opening through the bottom of the aircraft, a rotor in the chamber having radially extending blades, power driving mechanism for rotating the rotor to propel an air stream downwardly through the central upper opening and outwardly through the lower annular opening, a lift ring comprising an annular air foil in the lower annular opening, vanes connected to the stator assembly and located in the path of the air stream discharged from the rotor, said vanes extending at acute angles to radii from the axis of rotation of the rotor in directions for counteracting the tendency of the stator to turn with the rotor, at least part of the vanes being adjustable angularly with respect to said radii to compensate for changes in the friction which tends to turn the stator assembly with the rotor.

14. The aircraft described in claim 13 and in which the lift ring constitutes an annular air foil located in the lower annular opening from the chamber and spaced from the upper wall of the opening, and the vanes include fixed portions that connect the lift ring to the stator assembly and movable portions that can be shifted into different angular positions transverse of said radii for producing different degrees of reaction in a direction to compensate the tendency of the stator assembly to turn with the rotor.

15. An aircraft including a rotor having radially extending blades, power driving mechanism for the rotor, a stator having a bearing on which the rotor turns about a substantially vertical axis, annular lift rings including a bottom surface of the stator in the air stream from the rotor and shaped to deflect the air stream in a direction to develop lift and forming the upper surface of an opening through the bottom of the aircraft, a plurality of other annular lift rings spaced from the bottom surface of the stator and from each other but all located in the path of the air stream from the rotor and all shaped to deflect the air stream through the opening in the bottom of the aircraft and in directions to produce lift.

16. An aircraft comprising an upper stator, a lower stator, a rotor located between the stators with radially extending blades that draw air downwardly through an opening in the upper stator and that discharge the air outwardly and downwardly through an annular outlet in the bottom of the aircraft and between the upper and lower stators, and lift rings including an annular bottom surface of the upper stator comprising a top wall of the annular outlet opening shaped to deflect air downwardly to develop lift, a second lift ring comprising an air foil spaced downwardly from the top wall of the annular outlet and attached to the rotor for rotation as a unit therewith, the inner edge of the other lift ring being located near the outer tips of the rotor blades.

17. An aircraft having an upper stator with an opening therein for the downward flow of air, a lower stator rigidly connected to the upper stator, a rotor comprising a centrifugal blower located between the stators and enclosed thereby, the rotor having a hub portion that rotates on a bearing carried by the stators and about a substantially vertically extending axis, fuel tanks within the hub of the rotor, power driving mechanism for the rotor including a jet reactor which is supplied with fuel from the fuel tanks in the rotor by centrifugal force, an air duct through which the reactor is supplied with air from the rotor, and a lift ring comprising an annular air foil with its inner edge located near the outer tips of the rotor blades, and forming the upper surface of an opening through the bottom of the aircraft to deflect the air stream from the rotor in a direction to produce lift.

18. An aircraft including a stator assembly with a chamber therein, a rotor housed within the chamber and having radially extending blades for drawing a current of air downwardly through an opening in the stator assembly and for discharging the air outwardly and downwardly through an annular outlet passage in the bottom of the stator assembly, power driving mechanism for the rotor, a lift ring in the air stream from the rotor, the surface of the lift ring curving downwardly and forming the upper surface of an opening through the bottom of the aircraft and other power means for producing a reaction in a direction substantially normal to the axis of the rotor for imparting horizontal movement to the aircraft.

19. The aircraft described in claim 18 and in which the other power means include a rearwardly directed reactor jet supplied with air by the rotor.

20. An aircraft including a stator assembly having a chamber therein, a rotor enclosed in the chamber and comprising a centrifugal blower that draws air downwardly through an opening in the top of the stator assembly and then discharges the air through a passage in the stator assembly and in an annular stream downwardly through an outlet opening in the bottom of said stator assembly, an annular lift ring in the passage and located in position to deflect the air stream and shaped to deflect the air stream in a direction to produce lift for vertical ascent, the stator assembly constituting a wing which serves as an air foil section for producing lift when the aircraft is flying horizontally at substantial speed, the wing being thick enough to include the rotor chamber, and control surfaces connected to the wing for manoeuvring the aircraft in horizontal flight.

21. An aircraft including a stator assembly having chambers therein, a rotor enclosed in each of said chambers, each rotor comprising a centrifugal blower that draws air downwardly through an opening in the top of the stator assembly and then discharges the air radially, and a lift ring around each of the blowers curving downwardly and forming the upper surface of a passage opening through the bottom of the stator assembly to deflect the air stream in a direction to produce lift.

22. The aircraft described in claim 21 and in which the stator assembly constitutes a wing which serves as an air foil section for producing lift when the aircraft is flying horizontally at substantial speed and in which the wing is thick enough to include the chambers that house the rotors, and in which the wing has control surfaces for manoeuvring in horizontal flight.

References Cited in the file of this patent

UNITED STATES PATENTS

1,021,116	Ure	Mar. 26, 1912
1,660,257	Crespo	Feb. 21, 1928
1,724,226	Sorensen	Aug. 13, 1929
1,908,212	Alfaro	May 9, 1933
2,008,464	Nishi	July 16, 1935
2,077,471	Fink	Apr. 20, 1937
2,468,787	Sharpe	May 3, 1949
2,485,502	McCollum	Oct. 18, 1949
2,567,392	Naught	Sept. 11, 1951
2,670,049	Christie	Feb. 23, 1954

FOREIGN PATENTS

543,399	France	June 2, 1922

Sept. 11, 1951 H. NAUGHT 2,567,392

FLUID SUSTAINED AIRCRAFT

Filed June 28, 1948 4 Sheets-Sheet 1

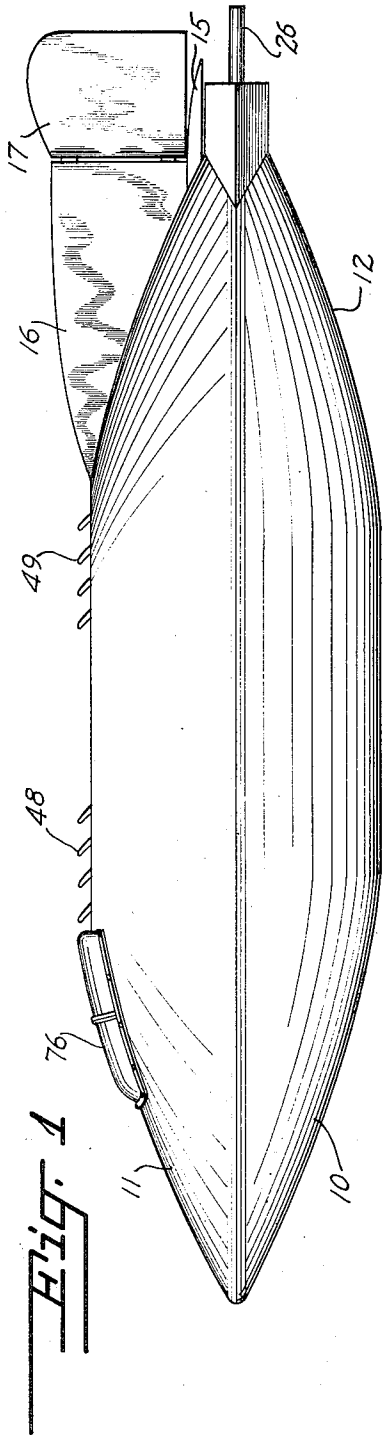

Fig. 1

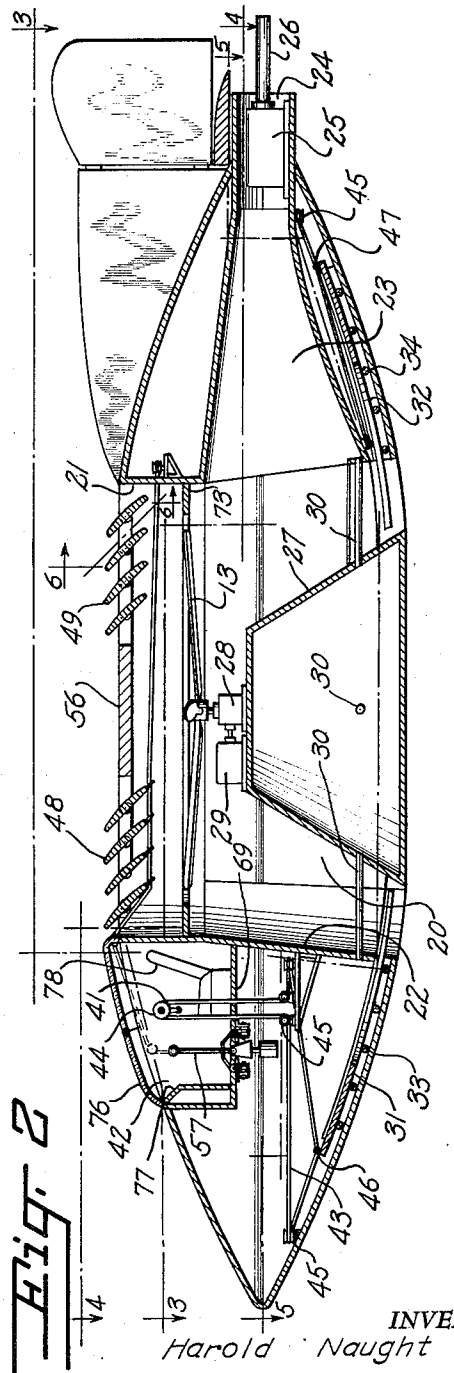

Fig. 2

INVENTOR.
Harold Naught
BY Victor J. Evans & Co.
ATTORNEYS

217 || @HighEarthOrbit_ linktr.ee/Grider2

Sept. 11, 1951 H. NAUGHT 2,567,392

FLUID SUSTAINED AIRCRAFT

Filed June 28, 1948 4 Sheets-Sheet 2

Fig. 3

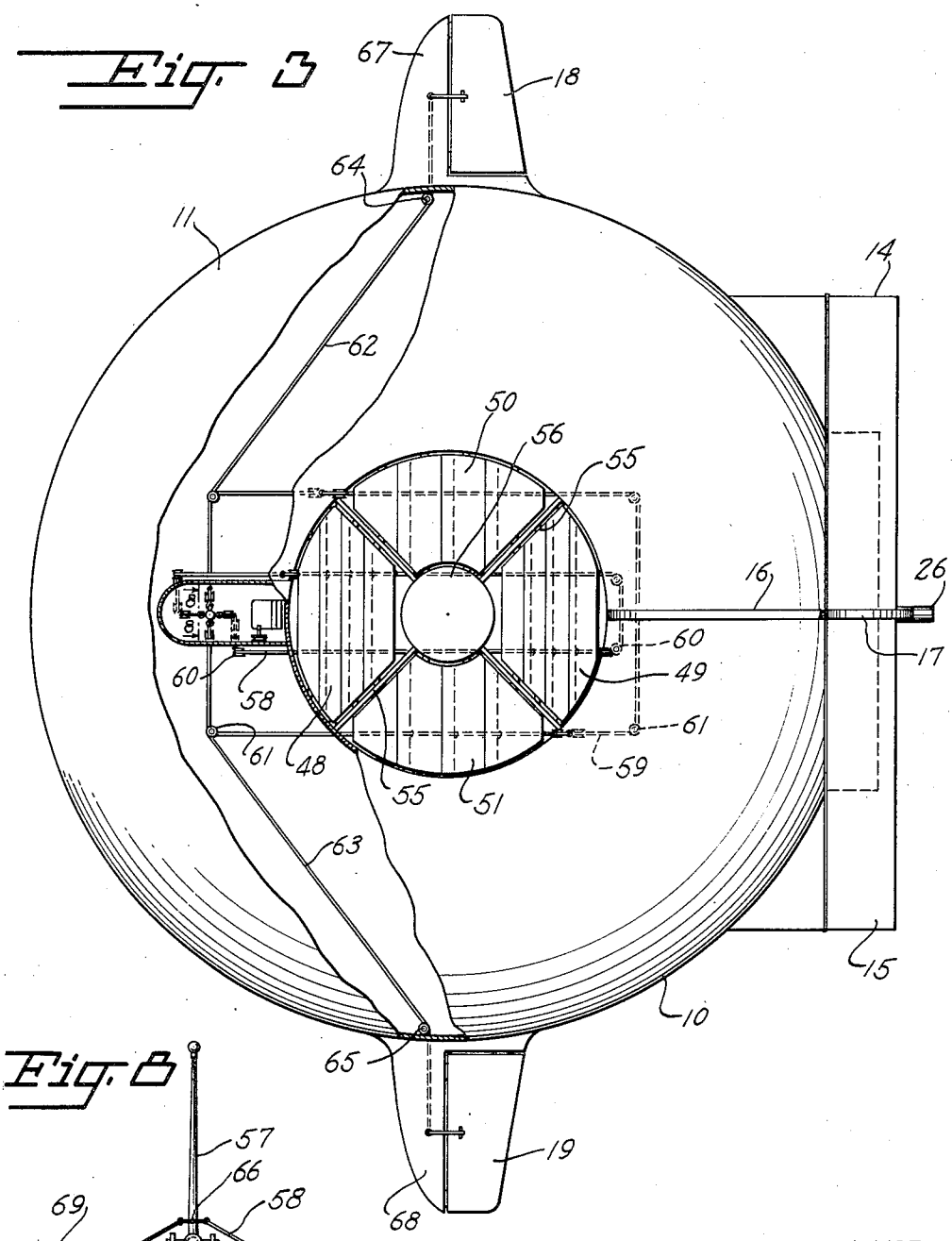

Fig. 8

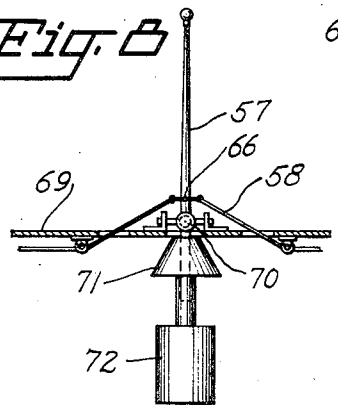

INVENTOR.
Harold Naught

BY Victor J. Evans & Co.

ATTORNEYS

218 || @HighEarthOrbit_ linktr.ee/Grider2

FLUID SUSTAINED AIRCRAFT

Filed June 28, 1948 4 Sheets-Sheet 3

Fig. 4

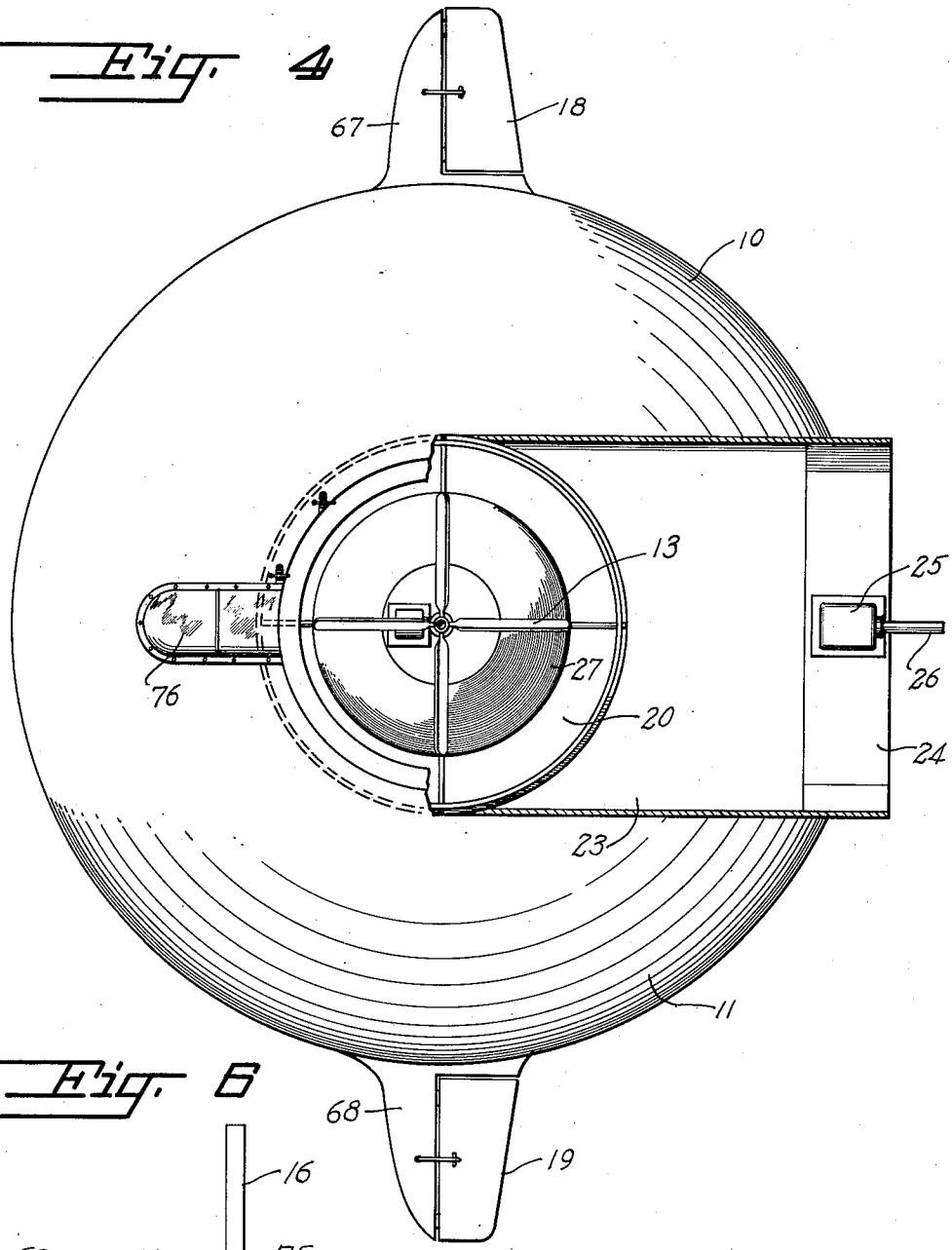

Fig. 6

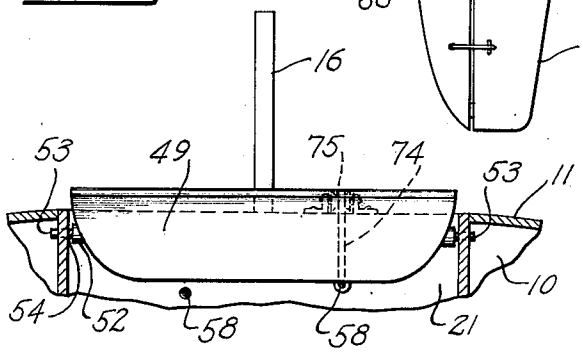

INVENTOR.
Harold Naught
BY Victor J. Evans & Co.
ATTORNEYS

219 || @HighEarthOrbit_ linktr.ee/Grider2

Sept. 11, 1951 H. NAUGHT 2,567,392

FLUID SUSTAINED AIRCRAFT

Filed June 28, 1948 4 Sheets-Sheet 4

Fig. 5

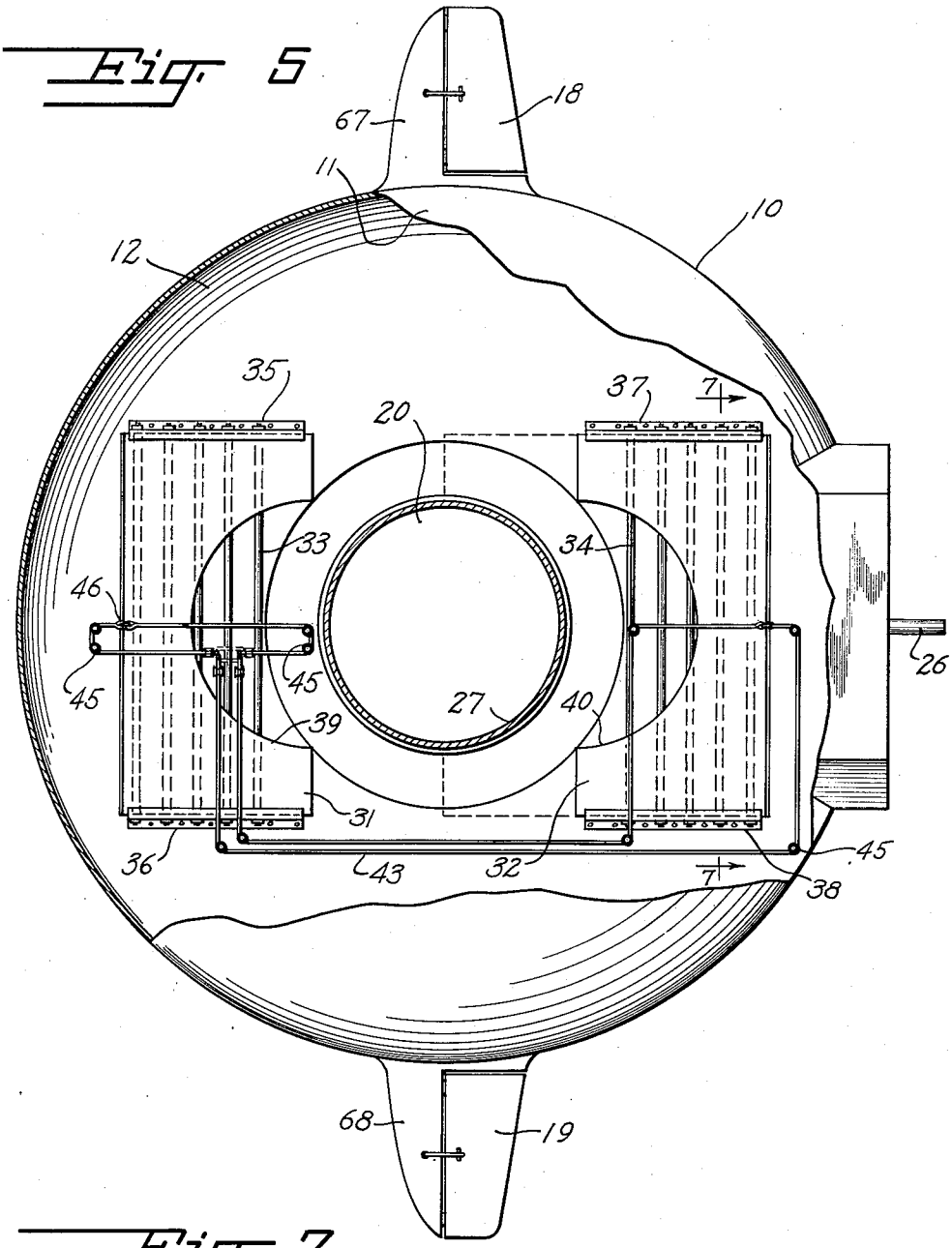

Fig. 7

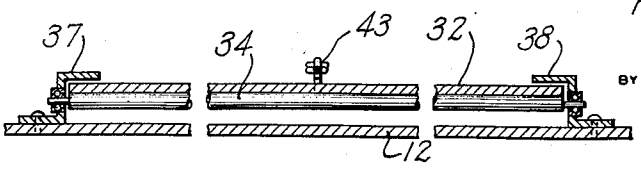

INVENTOR.
Harold Naught

BY Victor J. Evans & Co.

ATTORNEYS

220 || @HighEarthOrbit_ linktr.ee/Grider2

Patented Sept. 11, 1951

2,567,392

UNITED STATES PATENT OFFICE

2,567,392

FLUID SUSTAINED AIRCRAFT

Harold Naught, Rushville, Ill.

Application June 28, 1948, Serial No. 35,556

3 Claims. (Cl. 244—23)

1

This invention relates to aircraft of the helicopter and heavier than air type and particularly where the propeller is horizontally positioned in a vertically disposed cylinder, and in particular the invention relates to improvements in aircraft of this type wherein the propeller is positioned in a well in a large disc and the disc is provided with stabilizing means and means for controlling the passage of air through the well.

The purpose of this invention is to prove an improved method of stabilizing aircraft of the helicopter type and particularly of the type having a circular wing in the form of a large disc with a horizontally disposed propeller positioned in a vertically positioned well therein.

Various attempts have been made to stabilize aircraft of the circular disc-like type but the gyroscopic action of the propeller causes uneven stresses and strains which result in tilting and make balancing difficult. With this thought in mind this invention contemplates a helicopter in the form of a large disc with a propeller in a vertically disposed well in the center and with means for regulating the area of both the upper and lower ends of the well, and which is also provided with suitable elevators, stabilizers, ailerons and rudders.

The object of this invention is, therefore, to provide means for constructing aircraft of the helicopter type wherein the wing structure may be made circular and substantially flat and which is provided with internal means for maintaining it in a horizontal position.

Another object of the invention is to provide a helicopter having a propeller in a centrally disposed well in which regulating means is provided at both ends of the well for stabilizing the device.

Another object of the invention is to provide means for stabilizing aircraft of the helicopter type by controlling air currents around the propeller.

A further object of the invention is to provide a helicopter in the form of a large disc with stabilizing means incorporated therein, which is of a simple and economical construction.

With these and other objects and advantages in view the invention consists of the new and useful combination, construction, and arrangement of parts as hereinafter more fully described, set forth in the claims appended hereto, and disclosed in the accompanying drawings forming part hereof, wherein:

Figure 1 is a view showing a side elevation of the helicopter.

Figure 2 is a vertical longitudinal section through the aircraft showing the relative positions of the elements.

2

Figure 3 is a sectional plan through the aircraft taken on line 3—3 of Figure 2 with part broken away showing the aileron control cables.

Figure 4 is a plan view of the aircraft taken on line 4—4 of Figure 2 with part broken away showing the air tunnel for horizontal travel.

Figure 5 is a sectional plan taken on line 5—5 of Figure 2 showing the elements for regulating the area at the lower end of the air well.

Figure 6 is a detail taken on line 6—6 of Figure 2 showing the mounting of one of the air control shutters at the upper end of the air well.

Figure 7 is a detail taken on line 7—7 of Figure 5 showing the roller bearings for mounting the control slides at the lower end of the air well.

Figure 8 is a detail illustrating the mounting of the control lever or stick.

Referring now to the drawings wherein like reference characters denote corresponding parts the improved airship or helicopter of this invention includes a body 10 providing a combination fuselage and wing and having an upper wall 11 and a lower wall 12, a propeller 13, elevators 14 and 15, a vertical stabilizer 16, a rudder 17, and ailerons 18 and 19.

The body 10 is formed with a centrally disposed vertical well 20 having a straight upper section 21 and a lower gradually enlarging section 22, and the lower section is provided with a rearwardly extending tunnel 23 having converging walls forming a throat 24 at the rear through which air is discharged with a jet-like action to provide power for traveling horizontally. A jet motor 25 with a nozzle 26 may be mounted in the throat 24 which may be used for horizontal driving power, or as auxiliary power, if desired.

The propeller 13 is positioned in the upper straight section 21 and mounted on a frustroconical casing 27 through a gear housing 28 and a motor 29 is also mounted on the casing 27 and connected to the gear housing for driving the propeller. The casing 27 is supported by struts 30 from the side wall of the well as shown in Figures 2 and 4. The air forced downwardly by the propeller strikes the outer surface of the cone and is deflected outwardly at an angle of approximately five to ten degrees, and being forced through a comparatively small peripheral opening is ejected with a jet-like force.

The area of the peripheral opening around the base of the cone is controlled by slides or sliding plates 31 and 32 as shown in Figure 5,

221 || @HighEarthOrbit_ linktr.ee/Grider2

and the plates are mounted on rollers **33** and **34** in tracks formed with angles **35** and **36** for the plate **31**, and **37** and **38** for the plate **32**. The inner edges of the plates are provided with semi-circular recesses **39** and **40** which straddle the cone or casing **27**, and the positions of the plates are controlled by a crank **41** in a cockpit **42** through a cable **43** on a drum **44**. The cable extends downwardly as shown in Figure 2 and is trained over pulleys **45** and attached to the plate **31** at the point **46**, and to the plate **32** at the point **47**. As the crank is turned the plates are actuated to positions toward or away from the casing **27** thereby decreasing or increasing the area of the discharge opening around the base of the cone.

The air inlet opening at the upper end of the well is controlled by four sets of shutters **48**, **49**, **50** and **51**, as shown in Figure 3, and the shutters are mounted on individual shafts **52** as illustrated in Figure 6. The ends **53** of the shafts, which are reduced in diameter to provide shoulders **54**, are journaled in the wall of the upper straight section **21** of the well, at one end with the inner ends journaled in arms **55** of a spider **56**. These shutters are actuated by the stick **57** through cables **58** and **59** that are trained over pulleys **60** and **61**, respectively, and forward and backward movement of the stick opens and closes the shutters **48** and **49** while lateral movement thereof opens and closes the shutters **50** and **51**. The opening and closing of these shutters provides stabilizing means for the aircraft as it controls the flow of air to the propeller.

Lateral movement of the stick **57** also actuates the ailerons **18** and **19** through the cables **62** and **63** which are trained over pulleys **64** and **65** respectively, and connected to the stick at the point **66**. The ailerons **18** and **19** are hinged to the edges of fins **67** and **68** extending from the sides of the body **10**.

The stick **57** is mounted on the floor **69** of the cockpit **42** through a universal joint **70** and weights **71** and **72** are provided on the lower end whereby the stick is held upright by gravity. The battery of the aircraft may be used as the weights.

The upper straight section **21** of the well is provided with an annular ring **73** which is spaced slightly from the tips of the propeller blades to force the air into the propeller. The shutters in the upper end of the well may be attached to the operating cables through arms **74** which are mounted in bearings **75**, as shown in Figure 6.

The cockpit **42** is provided with a transparent cover **76** and an instrument panel **77** and a seat **78** are provided therein.

The fuel tanks and cargo may be placed in the frustro-conical casing **27**.

With the parts arranged in this manner an operator in the cockpit has absolute control over the aircraft at all times and by adjusting the positions of the shutters and slides the plane may be stabilized and raised and lowered, or driven horizontally, as may be desired.

It will be understood that the positions of the slides and shutters may be reversed, or shutters or slides may be used at both ends of the well, or any suitable means may be used for adjusting the areas at the ends of the well.

It will also be understood that other modifications may be made in the design or arrangement of the parts without departing from the spirit of the invention.

What is claimed is:

1. In an airship, the combination which comprises a horizontally disposed circular body having arcuate upper and lower walls tapering from a section having flat upper and lower surfaces at the center to an outer edge V-shape in cross section, a centrally positioned vertically disposed cylindrical wall having a gradually enlarging lower end extended through the said center section having the flat upper and lower surfaces of the body providing a substantially open vertically disposed well extended through the body, a hollow frustro-conical shaped centrally disposed base positioned in the lower part of the said well with the periphery of the lower end thereof spaced from the lower end of the wall of the well providing an annular air passage in the lower flat surface of the body, a horizontally disposed propeller journaled on the upper end of the said frustro-conical shaped base and spaced downwardly from the upper end of the well, a plurality of units of shutters positioned in the upper end of the well and journaled in the upper part of the body, means actuating the shutters for controlling the passage of air through sections of the upper end of the well independently, plates slidably mounted in the lower part of the body and positioned to pass into the lower part of the well for closing the said annular passage in the lower part of the body and thereby controlling the passage of air through the lower end of the well, means for rotating the propeller, a tunnel rectangular shaped in cross section extended from said well to a point at the rear edge of the said body providing a rear outlet for air in the well, ailerons extended from the sides of the body and adjustably mounted thereon, a vertically disposed stabilizer positioned on the upper surface of the body, and a rudder pivotally mounted on the said stabilizer.

2. In an airship, the combination which comprises a horizontally disposed circular body having arcuate upper and lower walls tapering from a section having flat upper and lower surfaces at the center to an outer edge V-shape in cross section, a centrally positioned vertically disposed cylindrical well having a gradually enlarging lower end extended through the said center having the flat upper and lower surfaces of the body providing a substantially open vertically disposed well extended through the body, a hollow frustro-conical shaped centrally disposed base positioned in the lower part of the said well with the periphery of the lower end thereof spaced from the lower end of the wall of the well providing an annular air passage in the lower flat surface of the body, a horizontally disposed propeller journaled on the upper end of the said frustro-conical shaped base and spaced downwardly from the upper end of the well, a plurality of units of shutters positioned in the upper end of the well and journaled in the upper part of the body, means actuating the shutters for controlling the passage of air through sections of the upper end of the well independently, plates slidably mounted in the lower part of the body and positioned to pass into the lower part of the well for closing the said annular passage in the lower part of the body and thereby controlling the passage of air through the lower end of the well, means for rotating the propeller, a tunnel rectangular shaped in cross section extended from said well to a point at the rear edge of the said body providing a rear outlet for air in the well, a jet action motor positioned in the rear end of the tunnel for providing a jet propelling force to co-

222 || @HighEarthOrbit_ linktr.ee/Grider2

act with the air from the propeller, ailerons extended from the sides of the body and adjustably mounted thereon, a vertically disposed stabilizer positioned on the upper surface of the body, and a rudder pivotally mounted on the said stabilizer.

3. In an airship, the combination which comprises a horizontally disposed circular body having arcuate upper and lower walls tapering from a section having flat upper and lower surfaces at the center to an outer edge V-shape in cross section, a centrally positioned vertically disposed cylindrical wall having a gradually enlarging lower end extended through the said center having the flat upper and lower surfaces of the body providing a substantially open vertically disposed well extended through the body, a hollow frustro-conical shaped centrally disposed base positioned in the lower part of the said well with the periphery of the lower end thereof spaced from the lower end of the wall of the well providing an annular air passage in the lower flat surface of the body, a horizontally disposed propeller journaled on the upper end of the said frustro-conical shaped base and spaced downwardly from the upper end of the well, a plurality of units of shutters positioned in the upper end of the well and journaled in the upper part of the body, means actuating the shutters for controlling the passage of air through sections of the upper end of the well independently, plates slidably mounted in the lower part of the body and positioned

to pass into the lower part of the well for closing the said annular passage in the lower part of the body and thereby controlling the passage of air through the lower end of the well, means for rotating the propeller, a tunnel rectangular shaped in cross section extended from said well to a point at the rear edge of the said body providing a rear outlet for air in the well, ailerons extended from the sides of the body and adjustably mounted thereon, a vertically disposed stabilizer positioned on the upper surface of the body, a rudder pivotally mounted on the said stabilizer, a cockpit in the said body, and means controlling the rudders and sliding plates from the said cockpit.

HAROLD NAUGHT.

REFERENCES CITED

The following references are of record in the file of this patent:

UNITED STATES PATENTS

Number	Name	Date
1,344,283	Webb	June 22, 1920
1,782,149	Salisbury et al.	Nov. 18, 1930
1,822,386	Andersen	Sept. 8, 1931
1,959,270	Hedlof	May 15, 1934
2,077,471	Fink	Apr. 20, 1937
2,377,835	Weygers	June 5, 1945
2,461,435	Neumann et al.	Feb. 8, 1949

223 || @HighEarthOrbit_ linktr.ee/Grider2

June 5, 1945. A. G. WEYGERS 2,377,835

DISCOPTER

Filed Jan. 1, 1944 9 Sheets-Sheet 1

Fig. 1

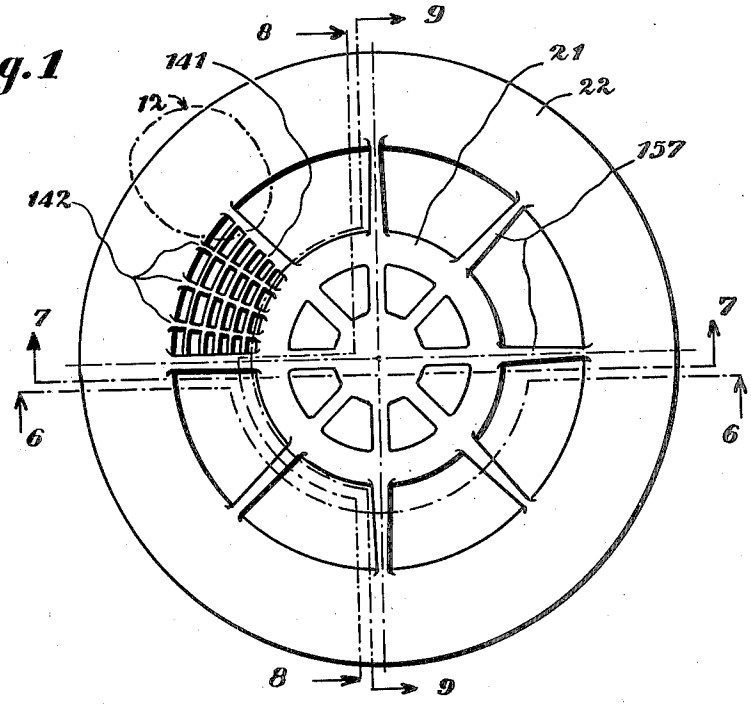

Fig. 2

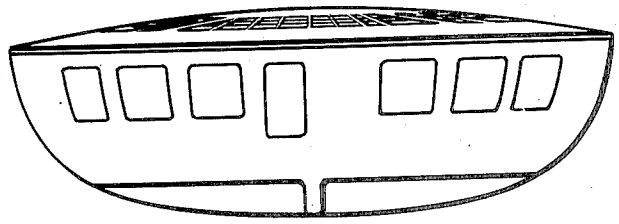

Fig. 4

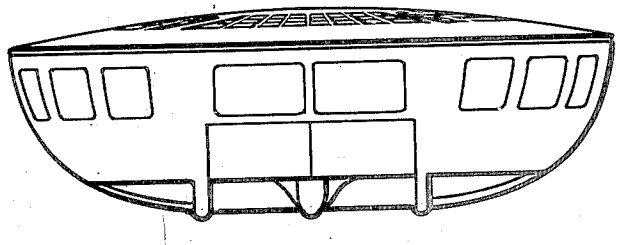

Inventor:
Alexander G. Weygers

By: Nicholas Rippen

224 || @HighEarthOrbit_ linktr.ee/Grider2

June 5, 1945. A. G. WEYGERS 2,377,835
DISCOPTER
Filed Jan. 1, 1944 9 Sheets-Sheet 2

Fig. 3

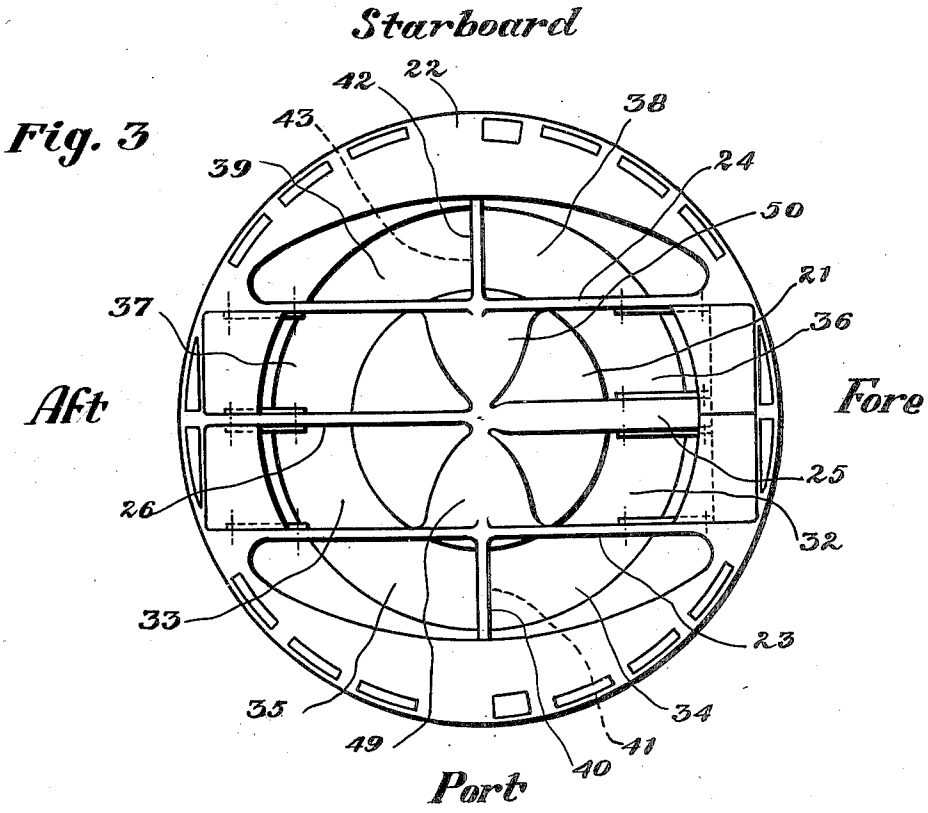

Fig. 5

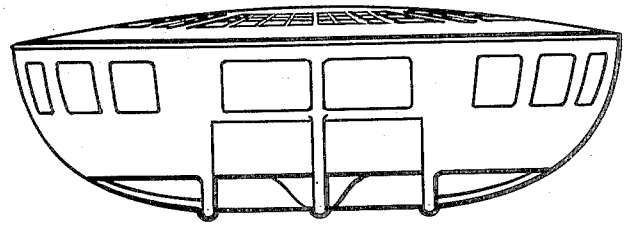

Inventor:
Alexander G. Weygers

By: Nicholas Rippen

225 || @HighEarthOrbit_ linktr.ee/Grider2

June 5, 1945. A. G. WEYGERS 2,377,835

DISCOPTER

Filed Jan. 1, 1944 9 Sheets-Sheet 3

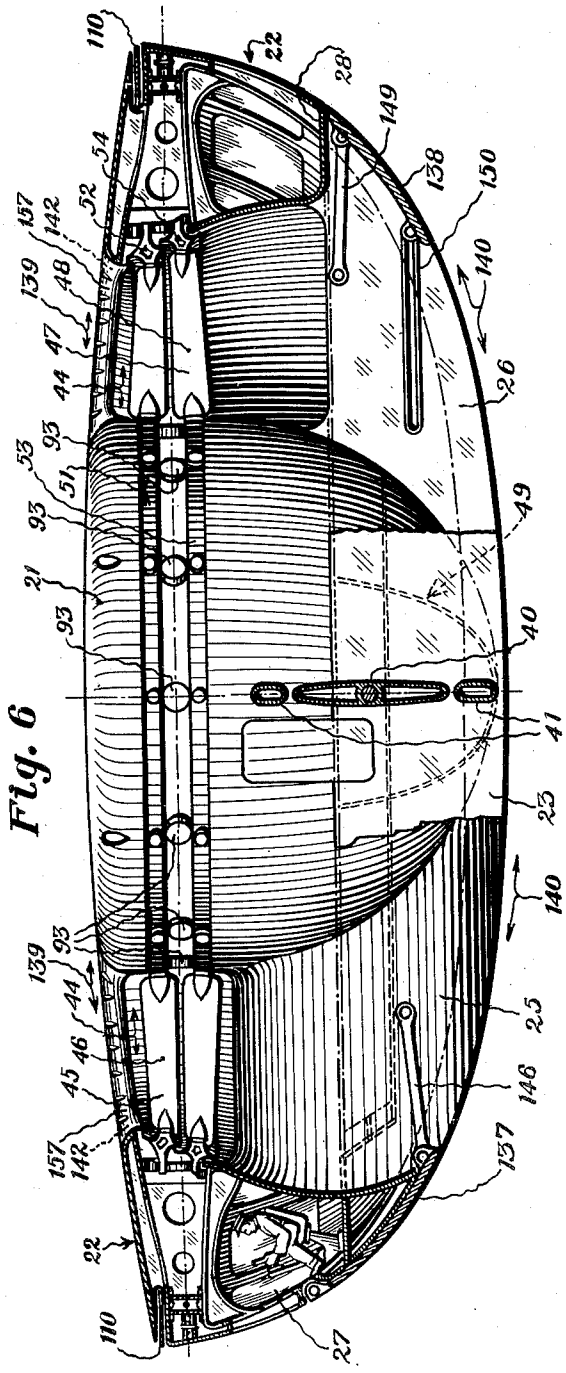

Fig. 6

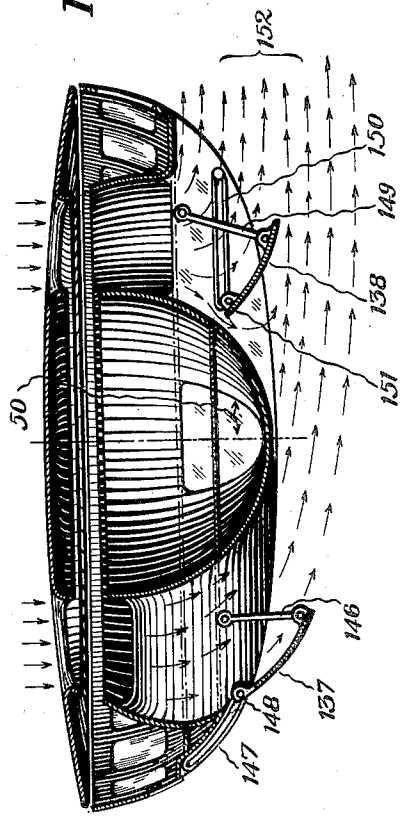

Fig. 7

Inventor:
Alexander G. Weygers

By: Nicholas Rippa

226 || @HighEarthOrbit_ linktr.ee/Grider2

June 5, 1945. A. G. WEYGERS 2,377,835

DISCOPTER

Filed Jan. 1, 1944 9 Sheets-Sheet 4

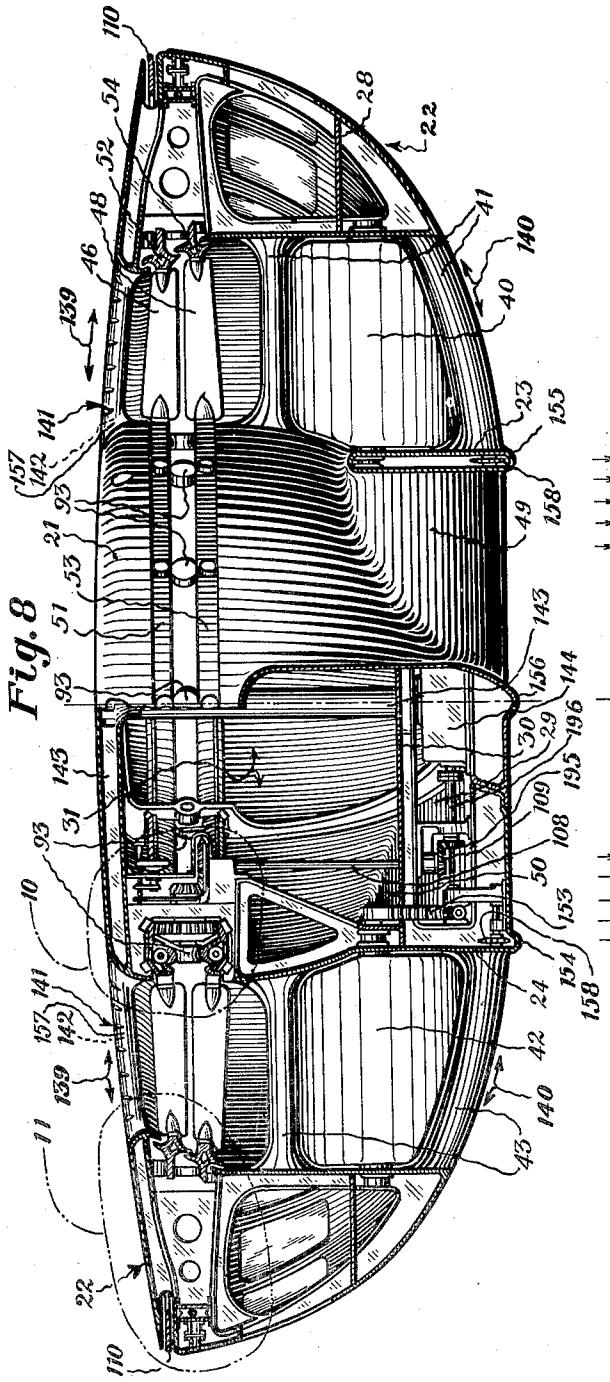

Fig. 8

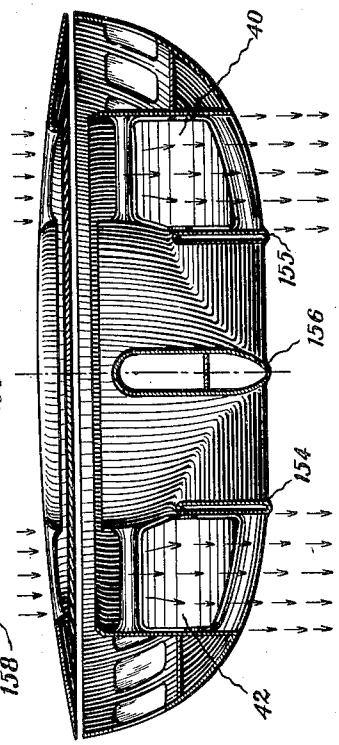

Fig. 9

Inventor:
Alexander G. Weygers

By: Nicholas Dippel

227 || @HighEarthOrbit_ linktr.ee/Grider2

DISCOPTER

Filed Jan. 1, 1944 9 Sheets-Sheet 5

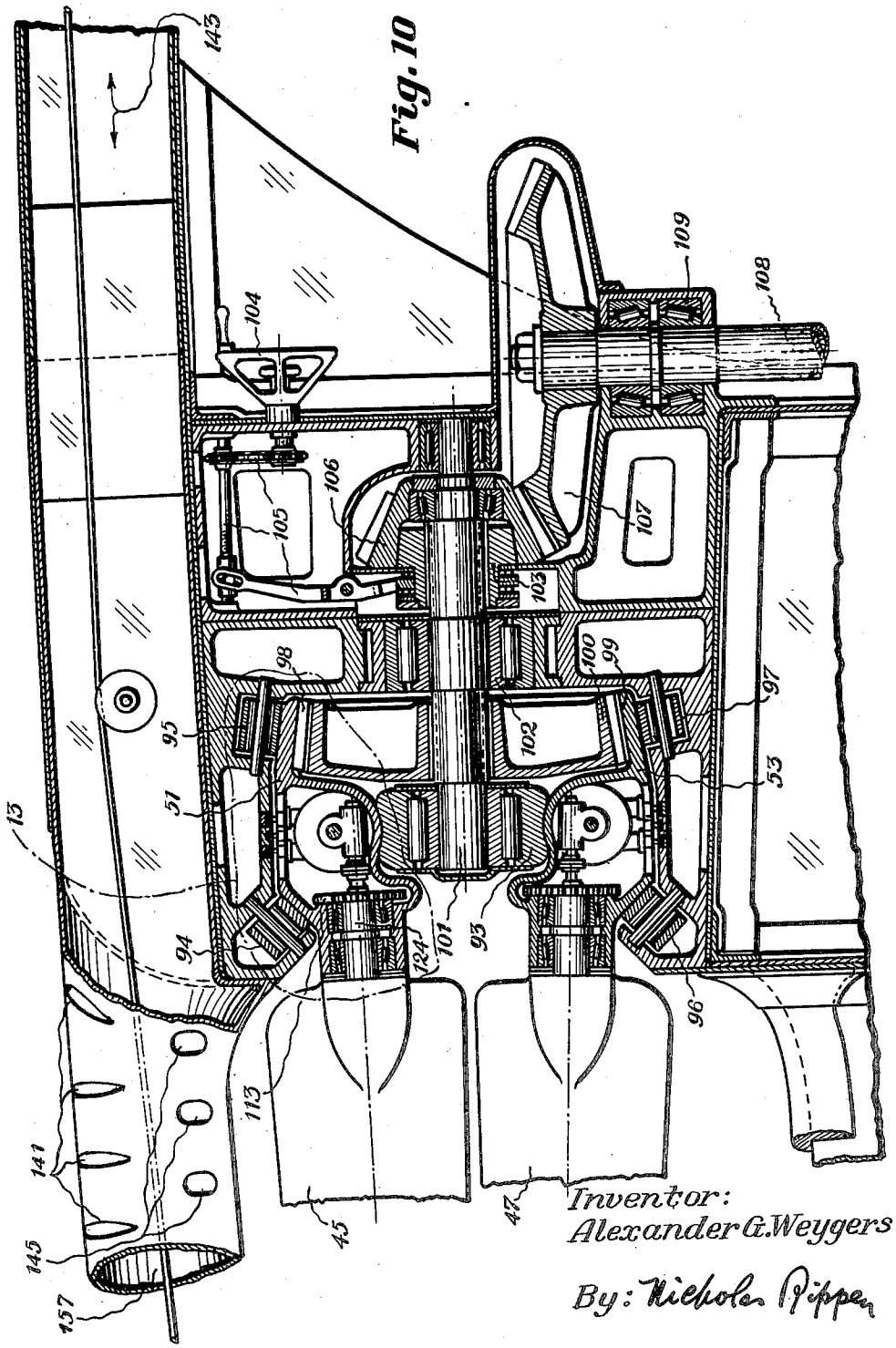

Inventor:
Alexander G. Weygers
By: Nicholas Pippen

228 || @HighEarthOrbit_ linktr.ee/Grider2

DISCOPTER

Filed Jan. 1, 1944 9 Sheets-Sheet 6

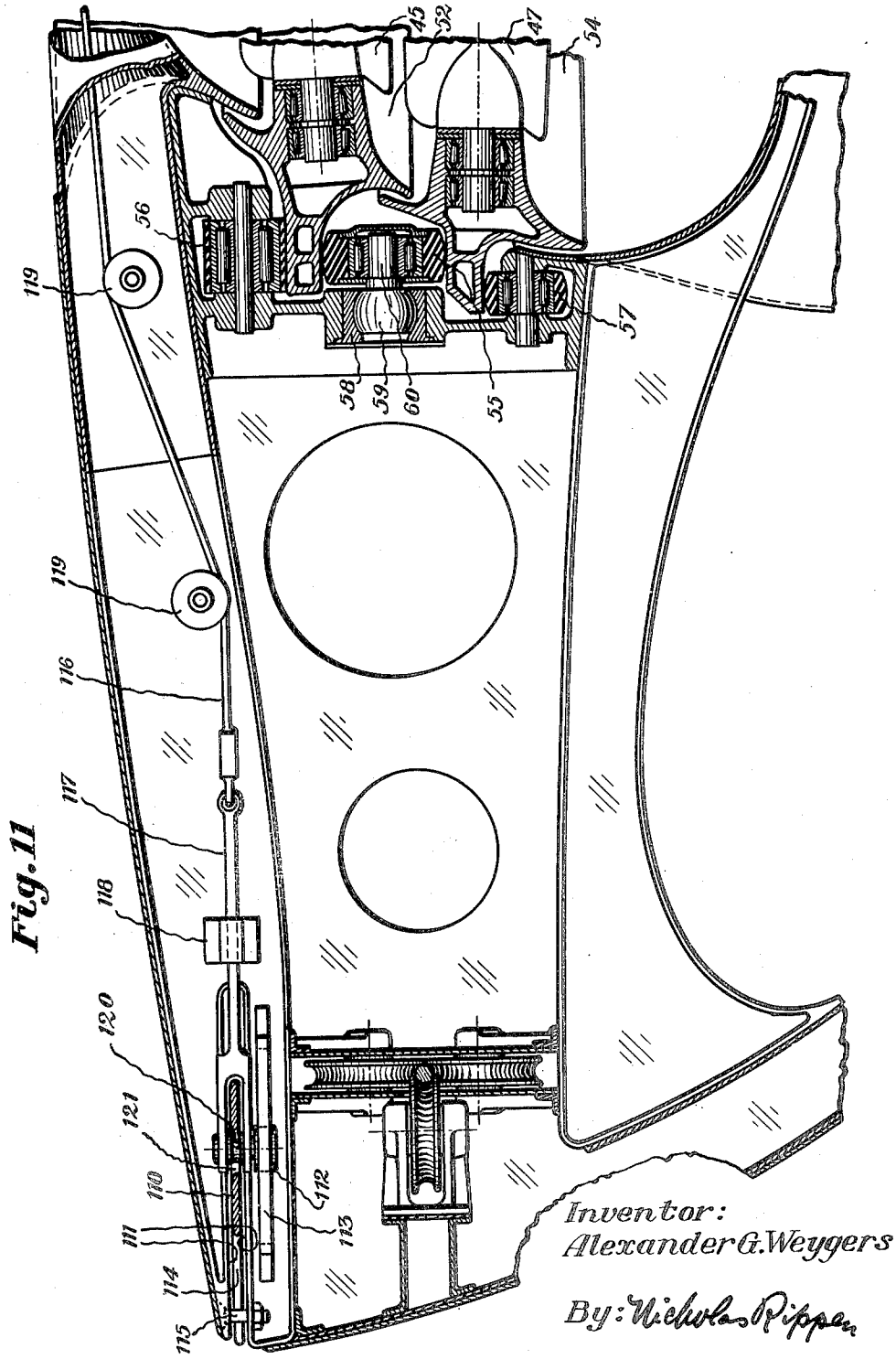

Fig. 11

Inventor:
Alexander G. Weygers

By: Nicholas Rippen

229 || @HighEarthOrbit_ linktr.ee/Grider2

June 5, 1945. A. G. WEYGERS 2,377,835

DISCOPTER

Filed Jan. 1, 1944 9 Sheets-Sheet 7

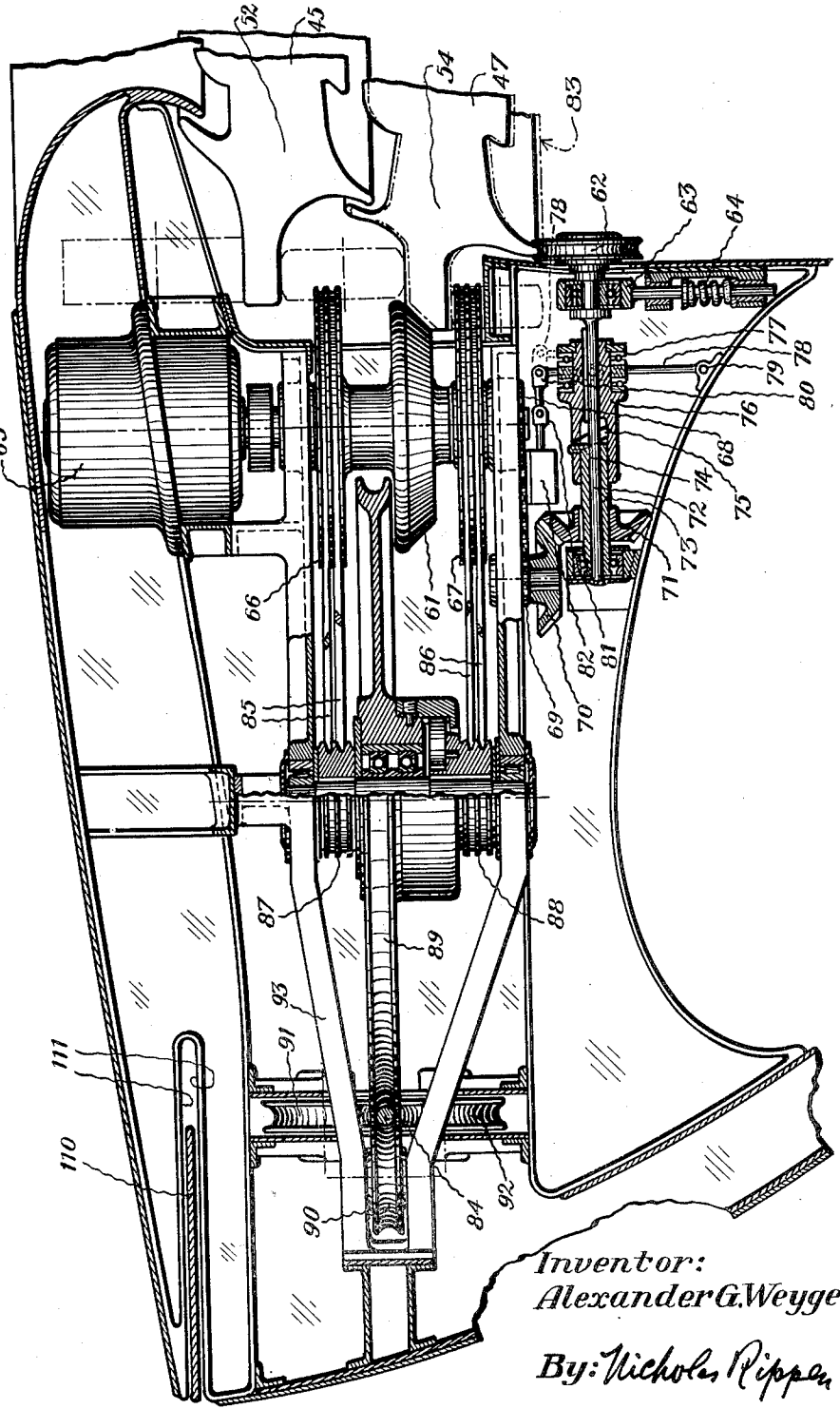

Fig. 12

Inventor:
Alexander G. Weygers

By: Nicholas Rippen

230 || @HighEarthOrbit_ linktr.ee/Grider2

June 5, 1945. A. G. WEYGERS 2,377,835

DISCOPTER

Filed Jan. 1, 1944 9 Sheets-Sheet 8

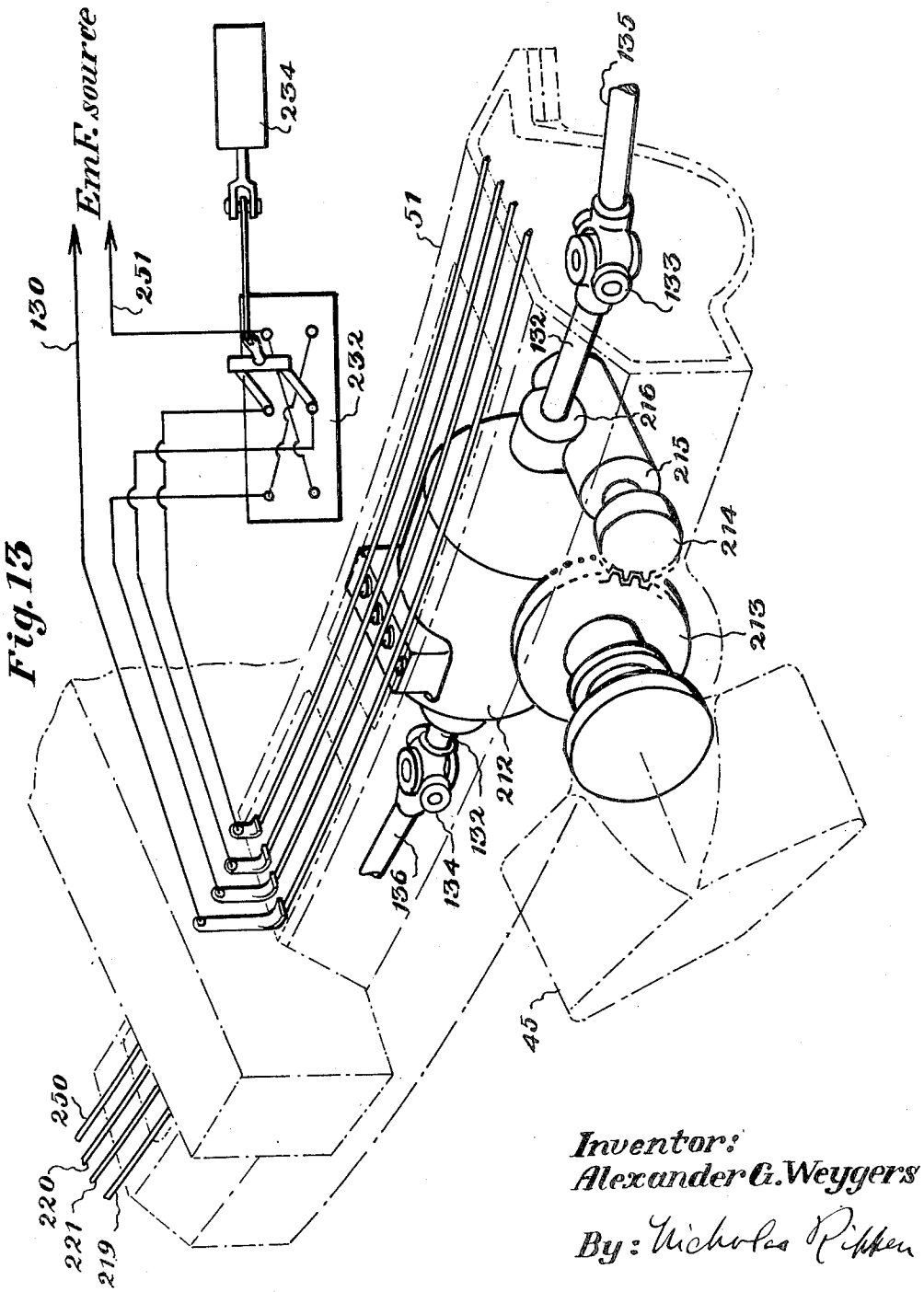

Inventor:
Alexander G. Weygers
By: Nicholas Pikken

231 || @HighEarthOrbit_ linktr.ee/Grider2

June 5, 1945. A. G. WEYGERS 2,377,835

DISCOPTER

Filed Jan. 1, 1944 9 Sheets-Sheet 9

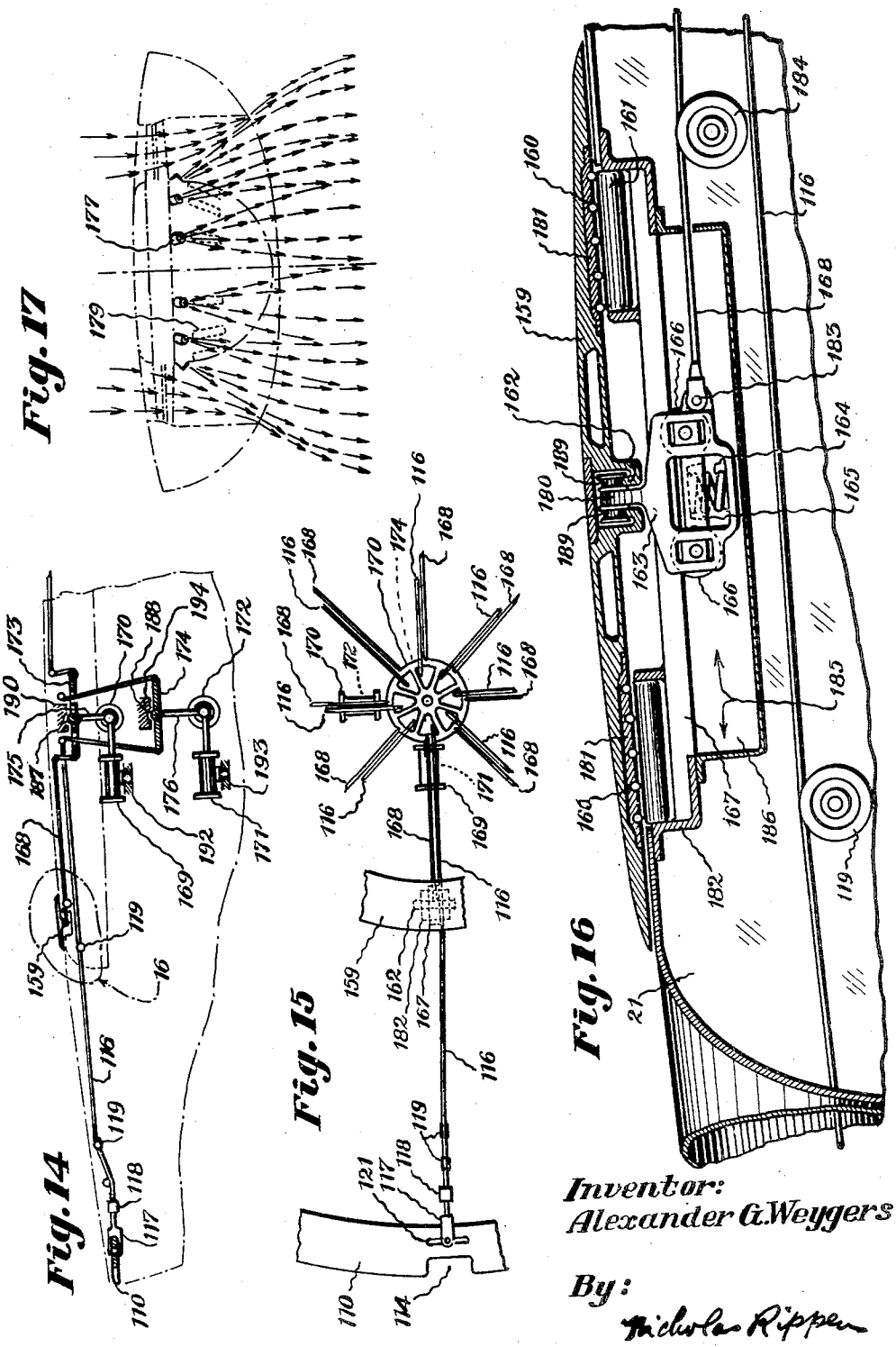

Inventor:
Alexander G. Weygers

By:
Nicholas Ripper

232 || @HighEarthOrbit_ linktr.ee/Grider2

Patented June 5, 1945 2,377,835

UNITED STATES PATENT OFFICE

2,37.,835

DISCOPTER

Alexander George Weygers, Oakland, Calif.

Application January 1, 1944, Serial No. 516,689

4 Claims. (Cl. 244—23)

My invention relates to wingless, heavier-than-air flying craft, whose outstanding example, until the time of the instant invention, has been the helicopter.

To a helicopter, a craft constructed on the principles of my invention bears a superficial resemblance, in that both types are sustained by at least one horizontal rotor. From this point on, however, all similarity between the two types of flying craft ends. A craft embodying my invention is distinguished from a helicopter in that the rotor or rotors in my craft are enclosed within a substantially vertical tunnel, the rotor regarded as a whole is mainshaftless and the external form of the craft is not very different from the familiar discus of the athlete, in common with which the craft enjoys certain aerodynamic advantages characteristic of the passage of the discus thru the air. Not only the rotors and power plant compartments but all of the usual moving and fixed protruding parts, present in both airplanes and helicopters, such as stabilizing and directing means and otherwise, are entirely enclosed within the strikingly simple and cleanly streamlined contour line of the craft when regarded from exteriorly thereof in any elevation view, thereby concealing from the casual view such parts.

The above mentioned three salient characteristics distinguishing my craft from the helicopter, set the two types apart by an extent at least as great as the difference between the helicopter and the airplane. Because of this basically new approach to the problem of designing superior flying craft, there is thereby posed a gap in generic terminology that can be filled only incompletely and awkwardly by qualifying the word, helicopter. To fill this gap, I have been compelled to coin a noun, a short, tri-syllabic term, for use now and in the future by myself and others in connection with all craft, whether designed by myself or others on the herein expounded principles, a term that connotes both the external form of the craft and its functional relationship to the helicopter. This term, selected for the title of this specification, is—discopter.

Craft embodying my invention may be sustained and propelled by a single rotor, a pair of coaxial rotors, a plurality of non-coaxial rotors, a plurality of non-coaxial pairs of coaxial rotors, or any other combination of the foregoing. For expounding said principles in a readily intelligible manner and also because it is a recommended type, particularly in the case of small craft, I have selected the type having a single pair of coaxial rotors revolving oppositely for description in this specification and for illustration in the accompanying drawings, in which—

Figure 1 is a plan view of said type as seen from above, the rotors having been removed from the view.

Figure 2 is a side elevation view thereof.

Figure 3 is a plan view thereof as seen from below, the rotors having been removed from the view.

Figure 4 is a fore or bow end elevation view thereof.

Figure 5 is an aft or stern end elevation view thereof.

Figure 6 is an enlarged, sectional view thereof, taken in the plane 6—6 in Figure 1 and as the discopter appears when in non-translational flight.

Figure 7 is a schematic sectional view thereof, taken in the plane 7—7 in Figure 1, to show the disposition of certain valves and air-currents when the discopter is in translational flight.

Figure 8 is an enlarged sectional view thereof, taken in the plane 8—8 in Figure 1.

Figure 9 is a schematic sectional view thereof, taken in the plane 9—9 in Figure 1, showing the disposition of certain valves and air-currents when the craft is in non-translational flight.

Figure 10 is an enlarged sectional view of certain parts within the circumscribed area 10 in Figure 8.

Figure 11 is an enlarged sectional view of certain parts within the circumscribed area 11 in Figure 8.

Figure 12 is an enlarged partly sectional view of certain parts within the circumscribed area 12 in Figure 1, adjacent the roof of the craft.

Figure 13 is an enlarged view of certain parts within the circumscribed area 13 in Figure 10.

Figure 14 is a schematic elevation view of certain parts adjacent the roofs of the two main bodies that are characteristic of the discopter, but embodying an optional, additional equilibrium-controlling means.

Figure 15 is a schematic plan view of the same.

Figure 16 is an enlarged sectional view of certain parts within the circumscribed area 16 in Figure 14.

Figure 17 is a schematic elevation view of a certain hub body in the craft, showing the disposition of certain rocket-type sustaining means.

Refer to Figures 3, 6 and 8. The main structure of the discopter consists of two mutually rigidly secured main bodies, one, a hub body 21, the other, a marginal body 22, disposed around, spaced from and secured to said hub body by a

233 || @HighEarthOrbit_ linktr.ee/Grider2

plurality of strength members therebetween, the space between the two bodies being a slipstream tunnel of composite form. Two of these strength members consist of narrow, deep, longitudinally extending, skin-covered hollow frames, laterally flanking said hub body, referred to herein also as keelsons; they are port keelson **23** and starboard keelson **24**. A third of the strength members is also a deep, longitudinally extending, skin-covered hollow frame, but it is wide enough to constitute therewithin a passageway for persons moving between the two main bodies. This member, also referred to as the vestibule, is indicated by **25**. A fourth of said strength members is, like members **23** and **24**, a narrow, deep, skin-covered frame, extending also longitudinally but, in this case, symmetrically or centrally of the craft at the aft or stern end thereof. It is indicated by **26** and is referred to as the aft keel. All skin-covered parts of the craft are provided with water-tight junctures so as to adapt the craft for floating on water as well as resting on land.

Marginal body **22**, by virtue of its outside disposition and its form lends itself unusually well to the provision in its outer wall of windows for maximum vision from inside of the craft. Also, it is commodious enough to provide a pilot's compartment **27**—see Figure 6—and a promenade deck all around the craft, whose floor is indicated by **28** and is referred to as the marginal floor. Hub body **21** contains main cabin **31** over engine compartment **29** under hub floor **30**.

The aforesaid strength members, together with other parts of the structure that are adjacent to them and in therewith common horizontal planes, such as wall sections of said main bodies and certain beam valves and their frames, to be referred to again below, define eight lower tunnel sections that are mutually separated sections of the previously referred to slipstream tunnel of composite form. The remainder of this tunnel consists of an upper, annular section, in which the two rotors revolve; refer also to Figures 7 and 9. Said eight lower tunnel sections are: fore inner port section **32**, contributively defined by vestibule **25** and port keelson **23**; aft inner port section **33**, contributively defined by keel **26** and port keelson **23**; fore outer port section **34**, contributively defined by the fore half section of port keelson **23**, port valve **40** and respective valve frame **41**; aft outer port section **35**, contributively defined by the aft half section of port keelson **23**, port valve **40** and respective valve frame **41**; fore inner starboard section **36**, contributively defined by vestibule **25** and starboard keelson **24**; aft inner starboard section **37**, contributively defined by keel **26** and starboard keelson **24**; fore outer starboard section **38**, contributively defined by the fore half section of starboard keelson **24**, starboard valve **42** and respective valve frame **43**; aft outer starboard section **39**, contributively defined by the aft half section of starboard keelson **24**, starboard valve **42** and respective valve frame **43**.

Refer to Figures 3, 6, 7, 8 and 9. The previously referred to upper or annular section is indicated by **44**. Accommodated by it and revolving therewithin are the upper rotor blades **45** of upper rotor **46** and the lower rotor blades **47** of lower rotor **48**, said rotors revolving in opposite directions. Main hub body **21** is thereof laterally flanked by two compartments or lobes extending from the interior thereof at the lower part thereof. They are port lobe **49** and starboard lobe **50**. These two lobes are disposed in loci where, in their absence, more or less eddying of air currents could be expected and therefore currents of little value. It is therefore thought advisable to constitute these lobes and thereby augment the total of utilizable space. Although adapted to house a variety of things, the two lobes herein contain mechanisms for actuating said valves.

Refer to Figures 6, 8, 10, 11, 12 and 13. Upper rotor **46** includes upper inner blade-mounting rotor ring **51** and upper outer blade-mounting rotor ring **52**. Lower rotor **48** includes lower inner blade-mounting rotor ring **53** and lower outer blade-mounting rotor ring **54**. The four rings are hollowed out for lightness, accessibility to bearing assemblies and to accommodate variable pitch-control mechanisms. Referring especially to Figure 11, supporting said outer rotor rings is a plurality of therebetween intervening rubber-tired thrust rollers **55**, suitably spaced from one another along the inner marginal edge of marginal main body **22**. Supporting the rotor rings **52** and **54** on those sides thereof that are opposed to the roller-**55**-adjacent sides thereof, is a plurality of rubber-tired thrust-bearing rollers **56** above and a like plurality **57** below, all suitably spaced from one another along the inner marginal edge of body **22**. Obliquely displaceable radial bearings **58** journal the "ball" ends **59** of pins **60** mounting rollers **55**.

Referring to Figure 12, lower outer rotor ring **54** is mounted in a manner whereby, when the rotor is at rest or revolving at idling speed, it is out of engagement with frictionally driven pulley **61**, but it is always in engagement with throw-out-shaft pulley **62**, whose shaft is journalled in bearings **63**, resiliently mounted in association with compression spring **64** in a manner whereby pulley **62** is continuously pushed upwardly toward rotor ring **54**. The shaft of electric motor **65** is disposed inside of a hollow shaft that mounts driven pulley **61** and the driving pulleys **66** and **67** and engages said hollow shaft thru a main pawl, said motor shaft having a sprocket **68** keyed to its end and engaging pawl sprocket **69** keyed to a common shaft with miter gear **70**, in turn driving miter gear **71**, keyed to hub **73**, which hub journals shaft **72**, the same shaft that pulley **62** is keyed to. Hub **73** is provided with pin **74** engaging helical lead **75** of sleeve **76**, which in turn mounts, thru ball thrust bearing **77**, the lever **78**, pivoted at one end thereof by pin **79** and at the other end thereof by pin **80**. Lever **78** is adapted to push and pull switch lever **81** of switch **82**, which controls the starting and stopping of electric motor **65**. The disposition of parts shown in Figure 12 is the one obtaining when the switch is off, the electric motor not turning, the driven pulley **61** being driven by rotor ring **54** because the latter is now revolving at full operating speed from the solid-line position it is now in and into which it has been pushed from the previous at-rest or idling position indicated by dot-and-dash lines **83**, expressing the upward reaction imposed on it by the air it is now displacing downwardly. In this full operating state, the higher R. P. M. of pulley **62** "over-rides" the relatively low R. P. M. otherwise imposed on the throw-out hub **73**, with the result that pin **74** causes sleeve **76** to move outwardly and carry with it switch lever **81** to be pushed correspondingly into the "off" position for motor **65**. Since motor **65** has as its function only the moderately fast revolving of gyroscopic ring **84**—to be referred to again below—when the rotors are revolving slowly or not at all, as when ending or beginning a flight, the motor **65** is designed to operate at a speed considerably less than

234 || @HighEarthOrbit_ linktr.ee/Grider2

the normal speed of the rotors, so that the aforesaid "over-riding" ensues. Pulley 62 has been provided with a pawl in similar manner as in pulley 89 in order that no slippage shall occur between rotor 54 and upward pressing pulley 62 when the rotor stands still or when its speed is less than the speed at which "over-riding" occurs.

Pulleys 66 and 67 drive, thru V-belts 85 and 86, the pulleys 87 and 88 respectively. Pulleys 87 and 88 are keyed to a shaft common to driving pulley 89, driving gyroscopic ring 84, which is supported by a plurality of sets of grooved-rimmed rollers, 90, 91 and 92, which sets are distributed at suitable intervals around marginal body along the outer margin thereof. One of said rollers, 90, and pulleys 89, 88, 87, 67, 66 and 61 are mounted in frame 122, which mounts also motor 65 and other neighboring parts.

The gyroscopic ring is a solid ring in one piece, although it may be constituted of a series of successively mutually secured segments as well. The ring is provided with mass and revolving speed adequate for its function of providing a considerable measure of gyroscopic stabilizing force on the craft.

Refer to Figures 6 and 8 and especially to 10. Said inner rotor rings are supported by a plurality of rollers 93 between the rings. Supporting the rotor rings 51 and 53 on those sides thereof that are opposed to the roller-93-adjacent sides thereof is the upper plurality of pairs of thrust rollers 94 and 95 and the lower plurality of pairs of thrust rollers 96 and 97, respectively, all of said pluralities being disposed at appropriate intervals around hub body 21 along the roof margin thereof.

Rotor rings 51 and 53 are provided also with mutually confronting, circular toothed racks, 98 and 99, respectively. Driving rotor rings 51 and 53 thru said racks is the bevel gear 100, which, together with one of said rollers 93, is keyed to shaft 101, journalled in bearing 102. Shaft 101 has, secured to the inner end thereof, the male cone clutch member 103, actuated by wheel 104 thru elements 105, member 103 engaging female cone clutch member 106 having a bevel-toothed periphery for coaction with bevel gear 107, keyed to counter shaft 108, journalled in bearing 109.

Referring to Figures 6, 8, 10 and 15 and especially to 11, the craft is provided with an outer stabilizing ring 110, also referred to as the secondary stabilizing ring, accommodated in slot 111. Ring 110 is displaceable eccentrically with reference to the vertical axis of the craft, in a horizontal direction that may be toward the bow, the stern, either beam, or obliquely. To reduce the otherwise perhaps excessive frictional relationship between the ring and its slot 111, the path of its movement is conditioned by a suitable plurality of rollers 112, secured to fork 117 and guided by guides 113, and a plurality of rollers 120, mounted on a roller pin mutual with rollers 112, and guided by slots 121 in ring 110; see especially Figure 15. Ring 110 is furthermore provided with notches 114, distributed along the outer margin thereof and freely accommodating the fixed pins 115, whose function it is to stiffen the otherwise insufficiently supported overhanging roof-margin of marginal body 22. Ring 110 is actuated by a plurality of cables 116 operating thru and attached to a corresponding plurality of forked rods 117, each journalled in a slide-bearing 118. Cables 116 are mounted on rollers 119. The function of ring 110 is a supplementary one for restoring equilibrium in response to manual operation or to an automatic pilot or to a combination thereof, supplementing the control exercised thru the structurally previously described valves, whose functioning will be described below. The integral nature of ring 110 makes it possible to displace it without resorting to push-and-pull controls. Only the one-way pulling control means in the form of cables 116, originating in a suitable control disc in the pilot's compartment is needed. Referring to Figure 8, countershaft 108 is driven, thru bevel gears 109 and 195, by shaft 196 of main power plant 144.

Referring to Figure 13, illustrating the mechanism for control of the pitch of the rotor blades, each blade shaft is geared to a thereto corresponding, individual, reversible electro servo motor 212 thru spur gears 213 and 214 and worm and pinion gears 215 and 216. Motor 212 is connected to the schematically represented electromotive force thru cables 130 and 251, the circuit thereof being completed by reversible switch 232. Switch 232 is closed or opened manually or it may be done automatically thru the medium of any one of a number of well known types of automatic pilots, schematically represented by 234, adapted to operatively respond to changes in altitude. Rails 221, 220, 219 and 250 are secured to rotor ring 51 in a manner whereby said rails are insulated from said ring.

Shaft 132 of motor 212 is connected, thru universal joints 133 and 134, to shafts 135 and 136, respectively, of the thereto flanking similar electric servo-motors, not shown, so that an acceptable degree of coordinated pitch-control of all of the rotor blades in rotor ring 51 can be attained. A similar arrangement obtains in the case of lower inner rotor ring 53. In view of the provision for an acceptable degree of coordinated pitch-control, only a single circuit, in the case of either inner rotor ring, from one of the blades to the indicating instrument is necessary.

Refer to Figures 1, 6, 7, 8 and 10. In addition to the previously referred to port and starboard valves, the craft is provided with a pair of fore or bow end valves 137, flanking vestibule 25 and functioning in lower tunnel sections 32 and 36, and a pair of aft or stern end valves 138, flanking keel 26 and functioning in lower tunnel sections 33 and 37.

The complete slipstream tunnel communicates with the exterior of the craft above by the substantially single roof opening or port 139, which may be regarded as only nominally subdivided into a plurality of ports by the grille elements, and below by the eight bottom ports 140. Roof port 139 is screened off above by a plurality of therewith coextensive, quadruple-function louver or grille panels, consisting of the hollow minor grille elements 141 and 142 and the therewith integral major grille elements 157. Elements 141 and 142 communicate interiorly thereof with one another and with major elements 157, which in turn communicate with exhaust pipe 143, extending upwardly from main power plant 144 for dissipation of the exhaust gases therefrom. Major grille elements 157 are provided with holes 145 communicating with the exterior of the craft by way of said roof port for egress therethru of said exhaust gases, as is the case with the said minor grille elements as well. It may be said that elements 141 and elements 142 and elements 157 each contributively constitute a muffler system for said main power plant, which is one of the four functions of the grille panels. A second function is the isolation of the interior of the slipstream

235 || @HighEarthOrbit_ linktr.ee/Grider2

tunnel from thereinto otherwise attracted foreign bodies, as, for example, birds. A third function is the heating of the air entering the slipstream tunnel, thereby reducing the tendency to ice-formation on critical moving and other parts. A fourth function, one that is specific to said major grille elements, 157, is to constitute rigid connecting braces—parts of the previously referred to strength members—between the two main bodies at their respective roof levels. A fifth function is conceivable: by making the grille panels of the louver type illustrated in Figure 1, but with the louver "boards" adjustable instead of fixed, the "boards" can be actuated to selectively block a part or all of the thereto corresponding, therewith coextensive roof port or ports, whereby control over the equilibrium of the craft may be thereby effected in obvious manner.

Foreign objects, such as rain, hail, snow and otherwise, passing thru the grille panels, will, upon contacting the rotor blades, be hurled centrifugally therefrom. Since unattached objects within a rotating body, upon contacting the interior members of this body, gravitate toward those parts thereof having greatest speed, therefore, the parts of greatest diameter, it follows that the rim diameter dimensions of the overlapping outer rotor rings, which increase gradually as they approach the lower rim of the lower rotor ring, will determine the path of movement of said unattached foreign bodies entering the slipstream tunnel. Once said objects have been projected centrifugally and downwardly, passing the rotor rings, the force of the downwardly directed slipstream will tend to carry the objects with it, to be ejected thru the bottom ports.

Referring to Figures 14, 15 and 16, there is illustrated here the substantially flat, eccentrically displaceable, primary stabilizing ring 159, movably secured to and overlying the upper marginal section of hub body 21 and adapted to being eccentrically displaced away from the vertical axis of the craft in any indicated direction to partially choke a desired section of the slipstream tunnel and thereby effect control over the equilibrium of the craft in a degree exceeding that provided by the previously described secondary flat or outer stabilizing ring 110. Ring 159 is referred to also as the inner flat stabilizing ring and alternatively as the slipstream-choking ring.

Substantially square housings 186, constituted of frames 182 and sections 185 are disposed at suitable intervals along the margin of hub body 21. Each housing 186 is provided with a pair of rails 167 in radial position with hub body 21, dividing the circumferential sides of the housing into two equal parts. The rails 167 engage flanged wheels 166, mounted in subframes 165, in turn resiliently mounted, thru springs 164, in major wheel-frames 163. Major frames 163 are provided with yoke-extensions 180, mounting thereto flanking flanged wheels 189, engaging rails 162, integral with ring 159. Ring 159 is provided with bearing plates 181, mounting pluralities of rollers 160, axially transversely engaging major rollers 161, mounted on rails 167 and frame 182. By this device, ring 159 is retained snugly and yet nearly frictionlessly against the hub body. Each said major wheel-frame is provided with a lug, to which a cable 168 is secured by a pin 183. Cables 168 ride on rollers 184 and are centrally joined to a central disc 173, which in turn is actuated by hydraulic cylinders 169 and 170 thru arm 175, journalled in ball joint 187, in response to the pilot's manual controls or to an automatic pilot or to both. Similarly, the cables 116, operating ring 110, terminate centrally in disc 174, actuated thru arm 176, journalled in ball joint 188, by hydraulic cylinders 171 and 172. Both ball joints 187 and 188 are fixed relatively to hub body 21. The aforesaid describes an optional additional stabilizing control device for the craft.

Refer to Figures 6, 7, 8 and 9. The fore or bow end valves 137 and the aft or stern end valves 138 are shown retracted in Figure 6, when the craft is, if in the air, in a hovering state, with the bottom parts 140 entirely unobstructed and therefore permitting the descending air currents from the rotors to continue substantially straight downwardly, providing only sustaining force for the craft.

In Figure 7, the bow end valves 137, under the action of slidable pins 148 secured to valves 137 and valve arms 146 and with the path of their movements conditioned by guides 147, have been displaced into a position wherein their inner surfaces constitute substantially well faired, aftwardly directed continuing surfaces of the fore surfaces of lower tunnel sections 32 and 36—see also Figure 3.

Similarly, in the case of stern end valves 138, under the action of slidable pins 151 secured to valves 138 and valve arms 149 and with the path of their movement conditioned by guides 150, these two valves have been displaced into positions wherein their inner curved surfaces extend aftwardly and downwardly. Obviously, the said disposition of said bow and stern end valves in Figure 7 operates to deflect the otherwise straight-downwardly directed slipstream 152 from the rotors into an aftwardly downward direction, thereby generating a propelling force on the craft in addition to a sustaining force thereon.

Refer to Figures 6, 7, 8 and 9. Port valve 40 and starboard valve 42, also referred to collectively as the beam valves, are shown in non-deflecting attitude for maximum utilization of the sustaining force generated by the descending currents thru lower tunnel sections 34, 35, 38 and 39. See also Figure 3. To correct yawing or to steer the craft, valves 40 and 42 may be suitably actuated. For example, assuming the pilot's desire to steer to the portside, the port valve can be pivoted to make it deflect the thereto corresponding currents slightly forwardly and the starboard valve pivoted to deflect the thereto corresponding currents aftwardly. Steering to the portside can be effected also by operating the portside valve alone, using it to deflect the thereto corresponding currents slightly forwardly, thereby braking the portside and without actuating the starboard valve at all, provided the center of rotation of the port and starboard valves intersects the ship's center of gravity.

In the event of a discopter type having a single rotor being used, the torque induced by the single rotor can be corrected automatically by actuating the beam valves with any one of a number of available automatic control devices. In the event of failure of either or both beam valves, the bow or stern end valves can be differentially actuated to set up yaw-correcting forces or to steer the craft or to restore equilibrium. All of the valves can be adapted to independent operation or to operation in any desired combination, under the control of the pilot or under automatic-pilot control or a combination thereof, utilizing devices that have long been familiar to the art. Since no claim is advanced respecting novelty of

236 || @HighEarthOrbit_ linktr.ee/Grider2

the actuating devices per se for said valves, because they do not constitute inventive parts of the instant invention, and to refrain from burdening this specification and accompanying drawings, no attempt is made to describe or illustrate them, excepting for a fragmentary illustration of some of the gearing actuating the starboard valve, indicated by **153** in Figure 8 and the gearing **158** actuating the fore and aft said valves.

Refer to Figure 17. In the event of breakdown of main power plant and to prevent a crash landing, the expedient of rocket sustentation is shown here being resorted to. This figure is a schematic view of the hub body provided with a series of circumferentially distributed jets **177** in the outer wall of the hub body and in the annular section of the slipstream tunnel. The jets are disposed in a manner whereby the discharge therefrom distributes as evenly as possible an annular blast filling the slipstream tunnel with a substantially balanced, downwardly directed slipstream, the power for the discharge deriving from explosive dry or liquid material of any suitable type. Suitable devices can be employed for selective use of the jets individually or for selectively determined use of their collective discharges to effect a downwardly directed force that is only slightly less than the force of gravity acting on the craft, whereby the craft can be eased down gently.

Refer to Figures 8 and 9. The craft has been shown without landing gears other than the moderately protruding bottom edges of the keel, keelsons and vestibule, which, in the case of the keelsons and vestibule, are indicated by **154**, **155** and **156** respectively. These protruding edges can be utilized for landing or resting on. The keelsons are adapted to being fitted with therein-contained retractable wheel-type landing gear or even caterpillar-type gear to facilitate the work of moving the craft about on the ground without resorting to the main power plant and rotors. This is particularly applicable to use of the craft amphibiously or for rising from and settling on water alone. Because the hull is readily adaptable to watertight construction thereof, because of the extreme flanking position of the keelsons' protruding bottom edges and because of the craft's substantially circular form, a capsizing of it in even a very heavy sea is unthinkable. The aftwardly flowing air-currents, a part of which are above the waterline, when suitably varied differentially by actuation of the two stern end valves, combined with reversed rotor-blade pitch, provides the craft with satisfactory self-docking quality and with the ability to execute other necessary movements while on the surface of the water.

In the event of a craft embodying a plurality of non-coaxial rotors, the term, marginal body, will be understood as applying to a composite structure of a plurality of hub bodies and respective slipstream tunnels other than the particular hub body and respective slipstream tunnel that happen to be under consideration.

I claim:

1. A substantially wingless, heavier-than-air flying craft, referred to as a discopter, powered by at least one main power plant and at least in greater part sustained and propelled by at least one main shaftless rotor powered by said main power plant and adapted to generate an initially downward slipstream, the main structure of the discopter consisting of a marginal body and at least one hub body, said marginal body being disposed around, spaced from and secured to said hub body by a plurality of therebetween intervening strength members, said space being a slipstream tunnel of composite form and constituted, in the upper part thereof, of an annular main tunnel section adapted to accommodate therewithin the said rotor, and, in the lower part of said tunnel, of a plurality of lower tunnel sections at least contributively defined by at least some of said strength members and including at least one port beam, at least one starboard beam, at least one bow end and at least one stern end lower tunnel section, the discopter including a plurality of quickly operable slipstream-controlling means respectively disposed in a corresponding number of said lower tunnel sections, said tunnel communicating with the exterior of the discopter, substantially at the roof thereof, by at least one roof port corresponding to said annular tunnel section, and, at the bottom of the discopter, by a plurality of bottom ports respectively corresponding to said lower tunnel sections.

2. A discopter as set forth in claim 1, at least one of said strength members being hollow and commodious enough to constitute itself into a passageway for persons between said two main bodies.

3. A discopter as set forth in claim 1, said strength members including a plurality of hollow braces between said two main bodies at their respective roof levels and adapted to function as part of a muffler system for the dissipation of the exhaust gases from said main power plant.

4. A discopter as set forth in claim 1 and including at least one grille panel disposed at said roof port, said panel being constituted, at least in appreciable part, of hollow members that are adapted to function as part of a muffler system for the dissipation of the exhaust gases from said main power plant, a part of said hollow members being relatively large and adapted to function as braces between said two main bodies at their respective roof levels.

ALEXANDER GEORGE WEYGERS.

237 || @HighEarthOrbit_ linktr.ee/Grider2

June 5, 1945. A. G. WEYGERS 2,377,835

DISCOPTER

Filed Jan. 1, 1944 9 Sheets-Sheet 1

Fig. 1

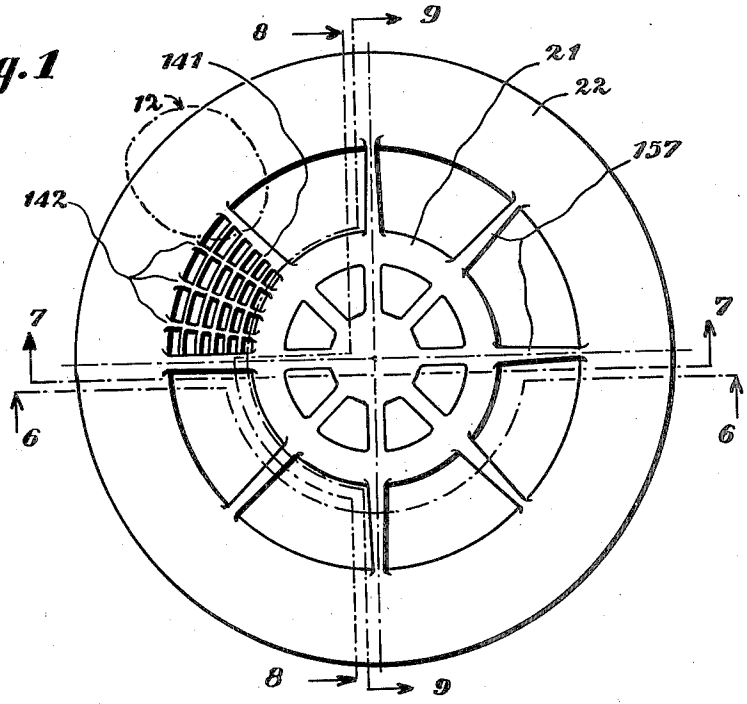

Fig. 2

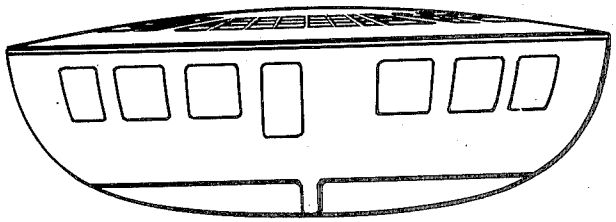

Fig. 4

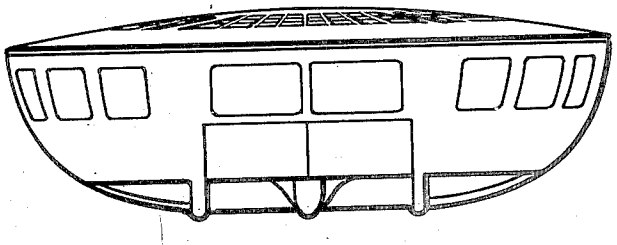

Inventor:
Alexander G. Weygers

By: Nicholas Rippen

June 5, 1945. A. G. WEYGERS 2,377,835

DISCOPTER

Filed Jan. 1, 1944 9 Sheets-Sheet 2

Fig. 3

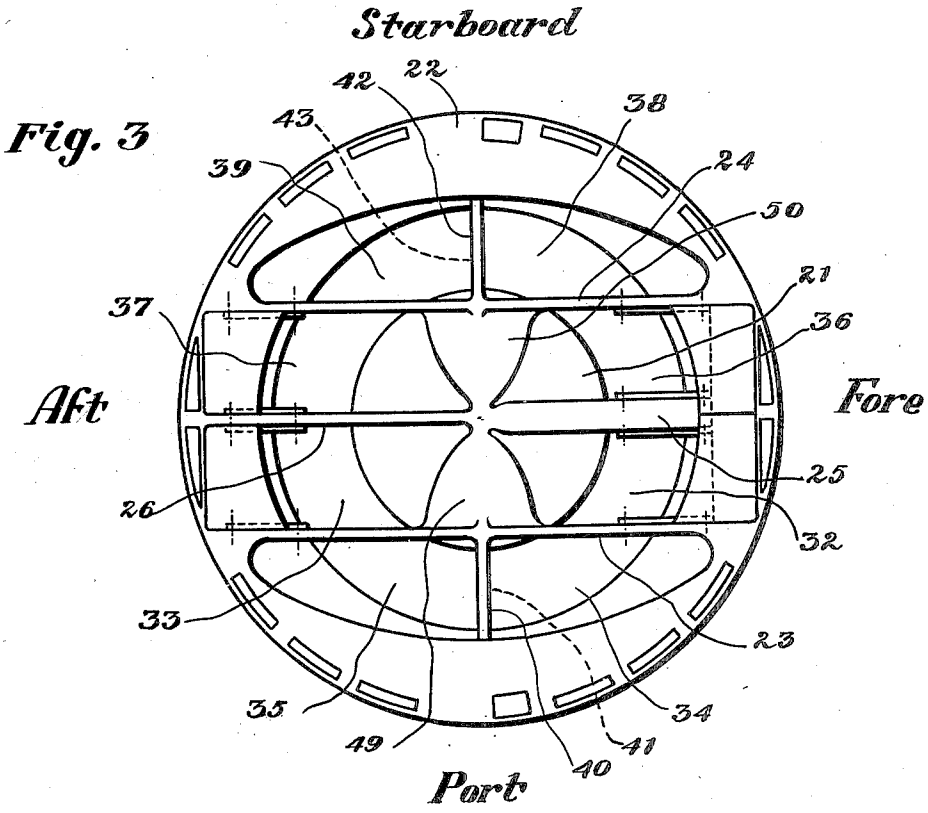

Fig. 5

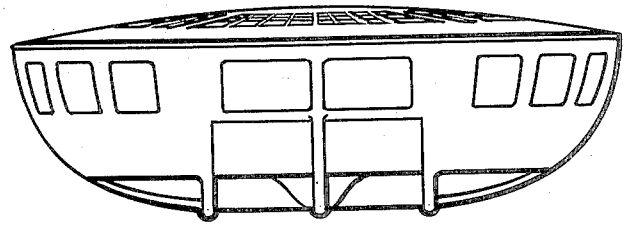

Inventor:
Alexander G. Weygers

By: Nicholas Rippen

239 || @HighEarthOrbit_ linktr.ee/Grider2

June 5, 1945. A. G. WEYGERS 2,377,835

DISCOPTER

Filed Jan. 1, 1944 9 Sheets-Sheet 3

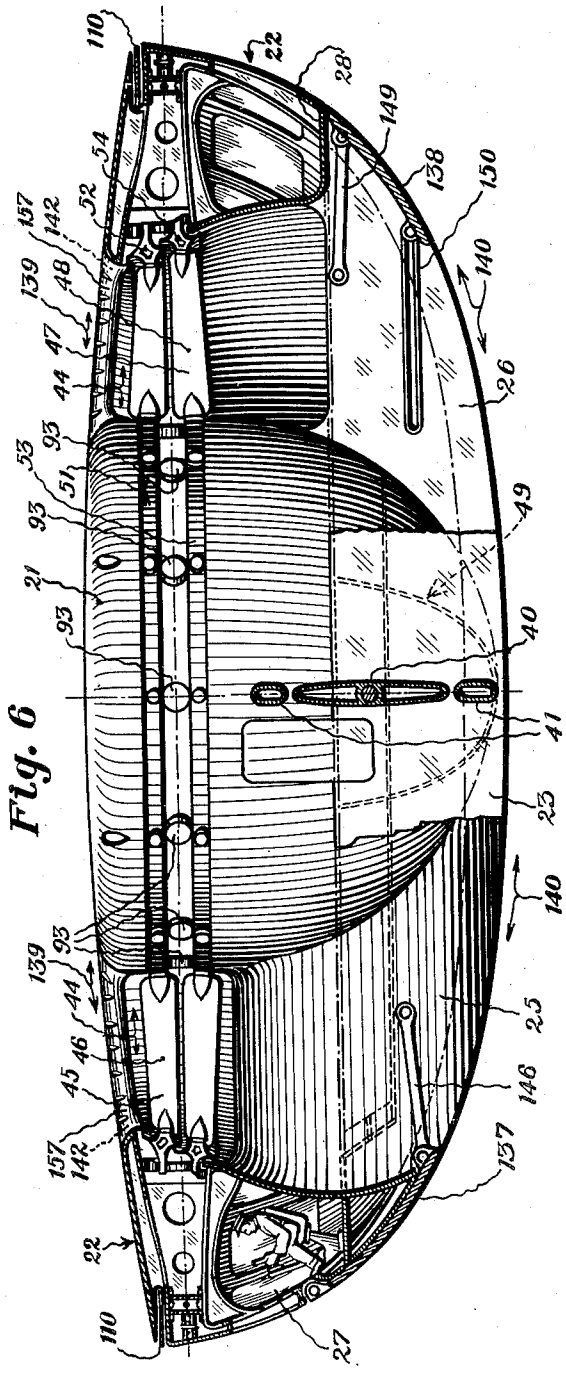

Fig. 6

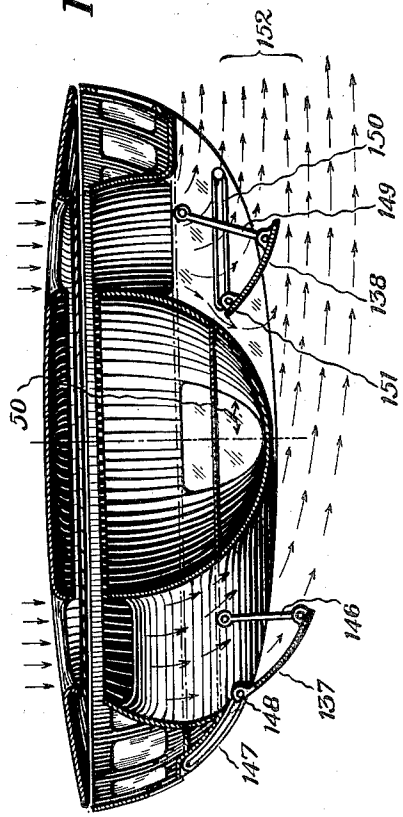

Fig. 7

Inventor:
Alexander G. Weygers

By: Nicholas Rippa

240 || @HighEarthOrbit_ linktr.ee/Grider2

June 5, 1945. A. G. WEYGERS 2,377,835

DISCOPTER

Filed Jan. 1, 1944 9 Sheets-Sheet 4

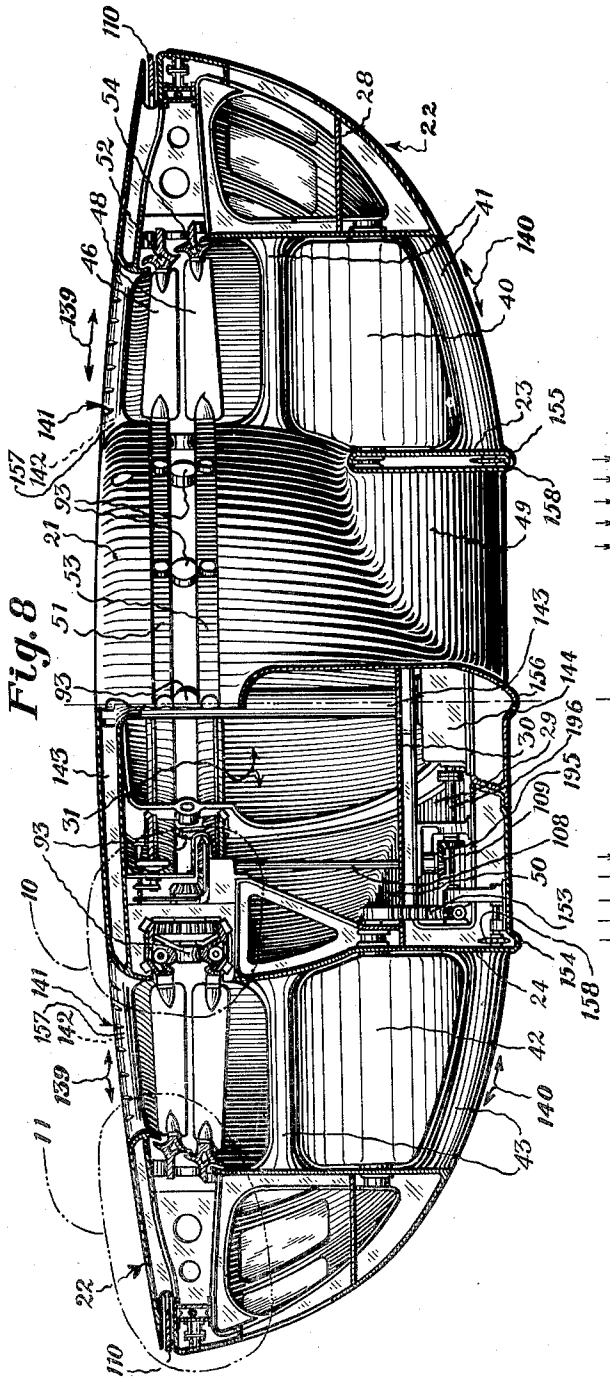

Fig. 8

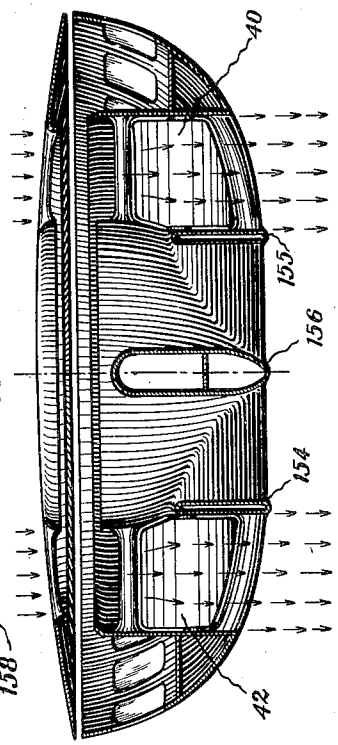

Fig. 9

Inventor:
Alexander G. Weygers
By: Nicholas Dippel

241 || @HighEarthOrbit_ linktr.ee/Grider2

DISCOPTER

Filed Jan. 1, 1944 9 Sheets-Sheet 5

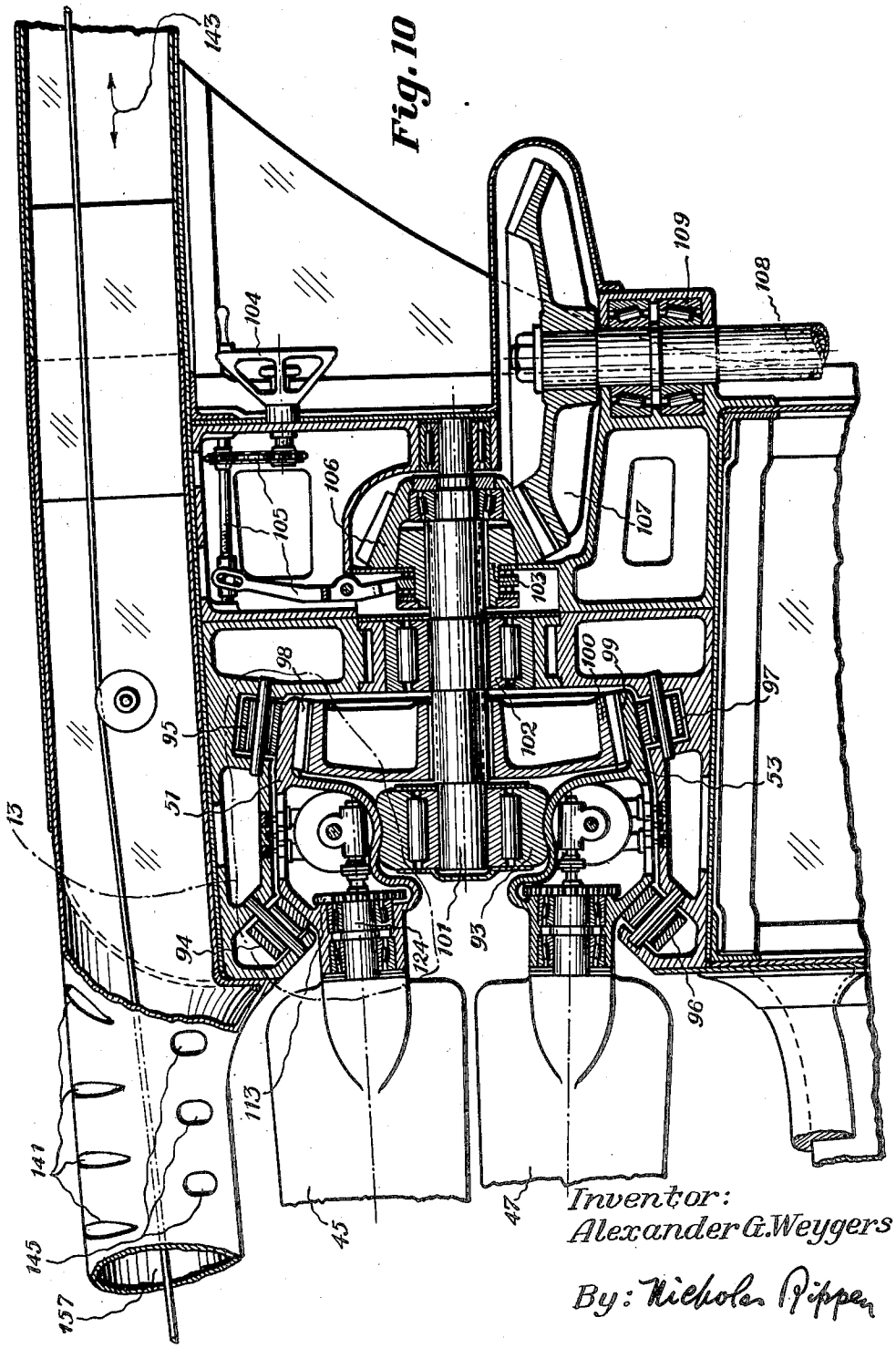

Inventor:
Alexander G. Weygers
By: Nicholas Pippen

242 || @HighEarthOrbit_ linktr.ee/Grider2

DISCOPTER

Filed Jan. 1, 1944 9 Sheets-Sheet 6

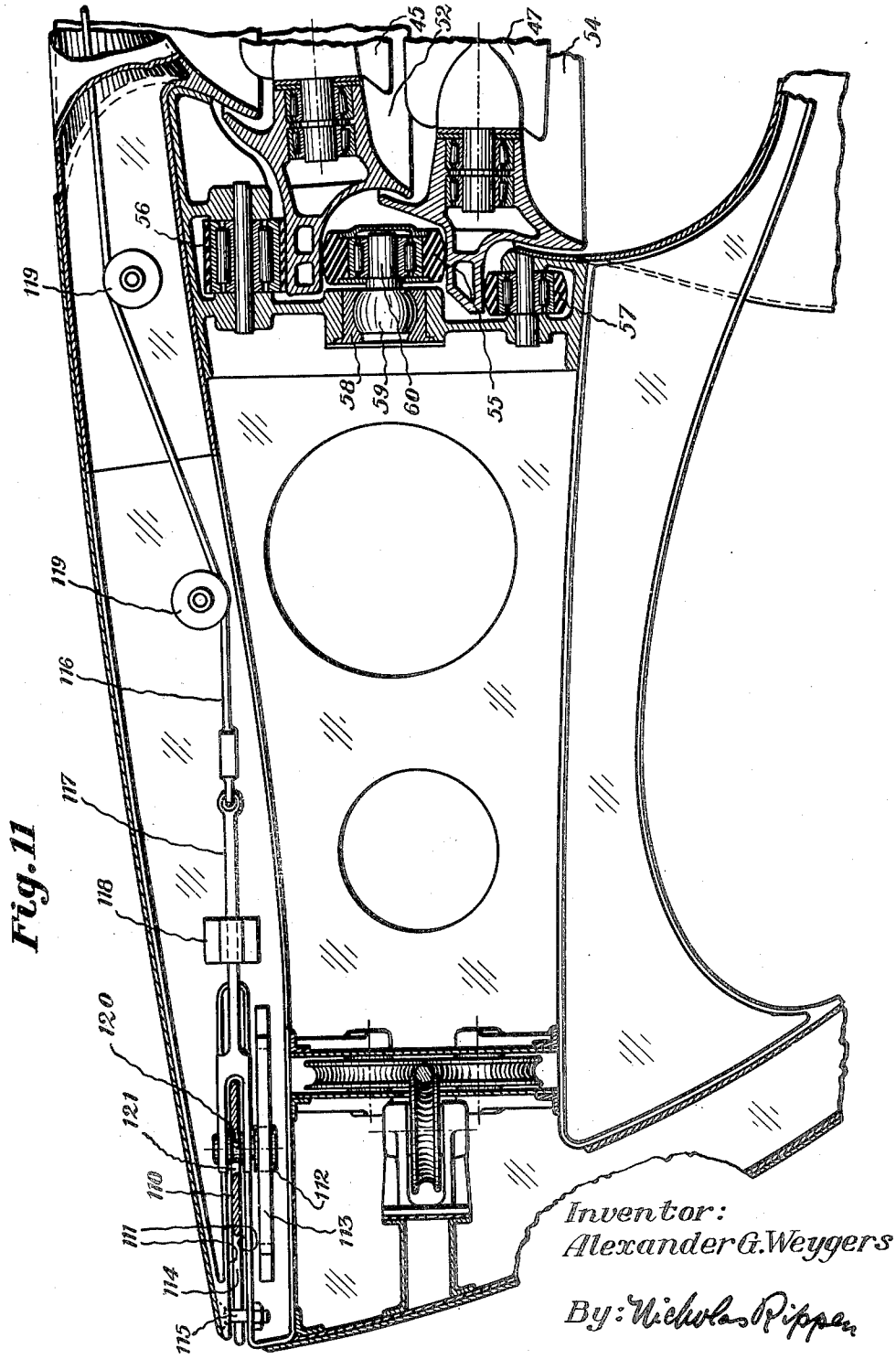

Fig. 11

243 || @HighEarthOrbit_ linktr.ee/Grider2

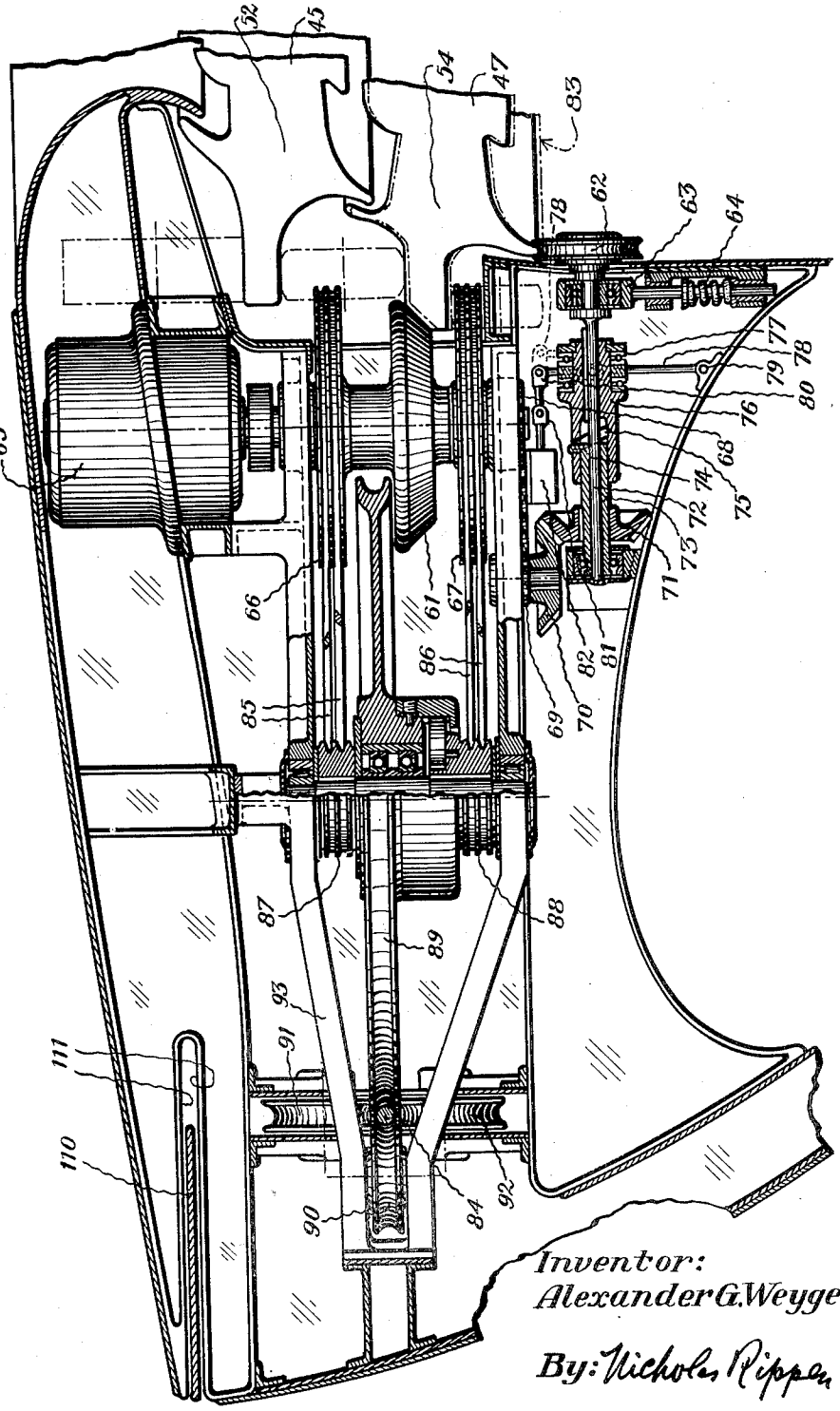

Fig. 12

Inventor:
Alexander G. Weygers

By: Nicholas Rippen

244 || @HighEarthOrbit_ linktr.ee/Grider2

June 5, 1945. A. G. WEYGERS 2,377,835

DISCOPTER

Filed Jan. 1, 1944 9 Sheets-Sheet 8

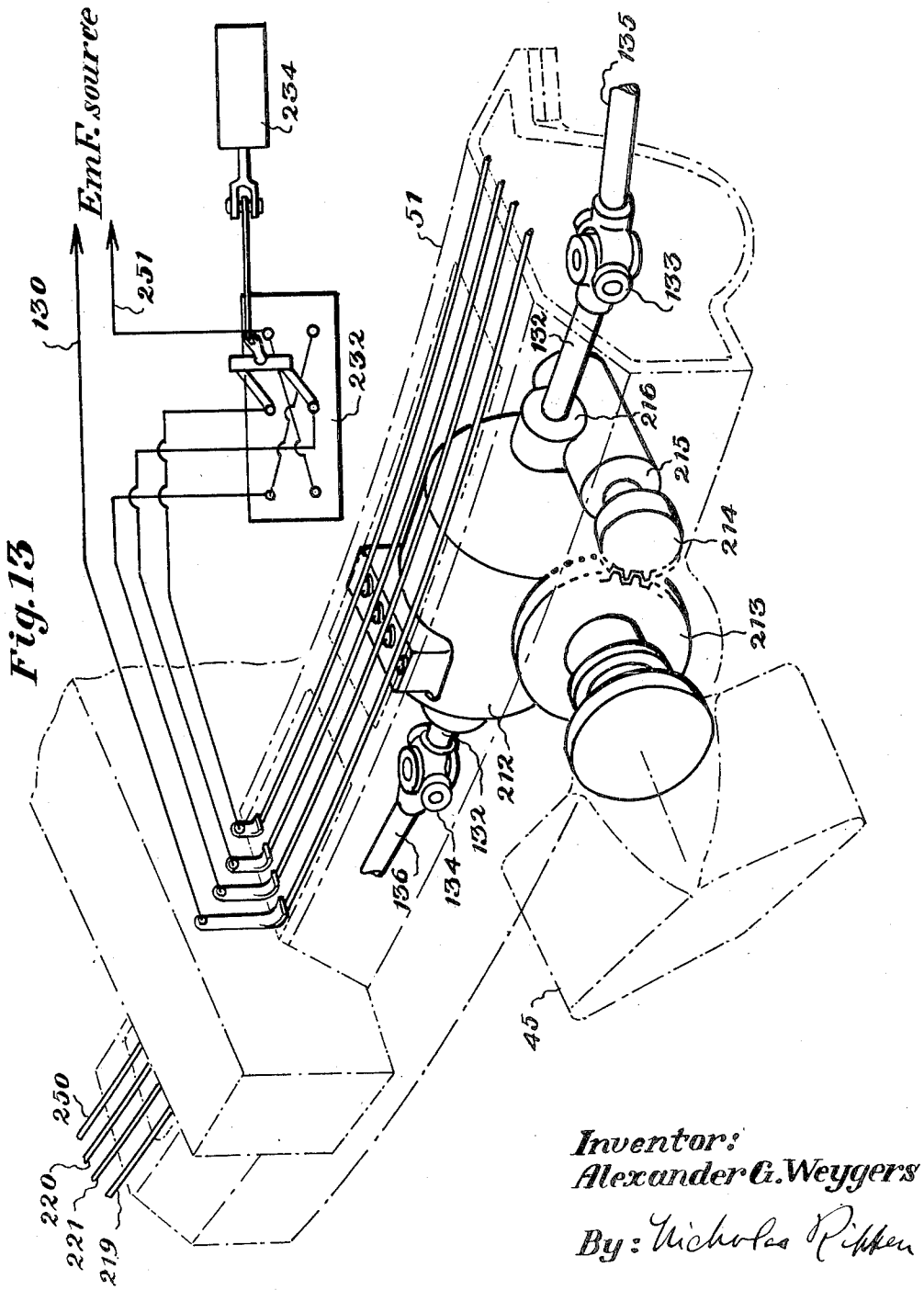

Inventor:
Alexander G. Weygers
By: Nicholas Pikken

245 || @HighEarthOrbit_ linktr.ee/Grider2

June 5, 1945. A. G. WEYGERS 2,377,835

DISCOPTER

Filed Jan. 1, 1944 9 Sheets-Sheet 9

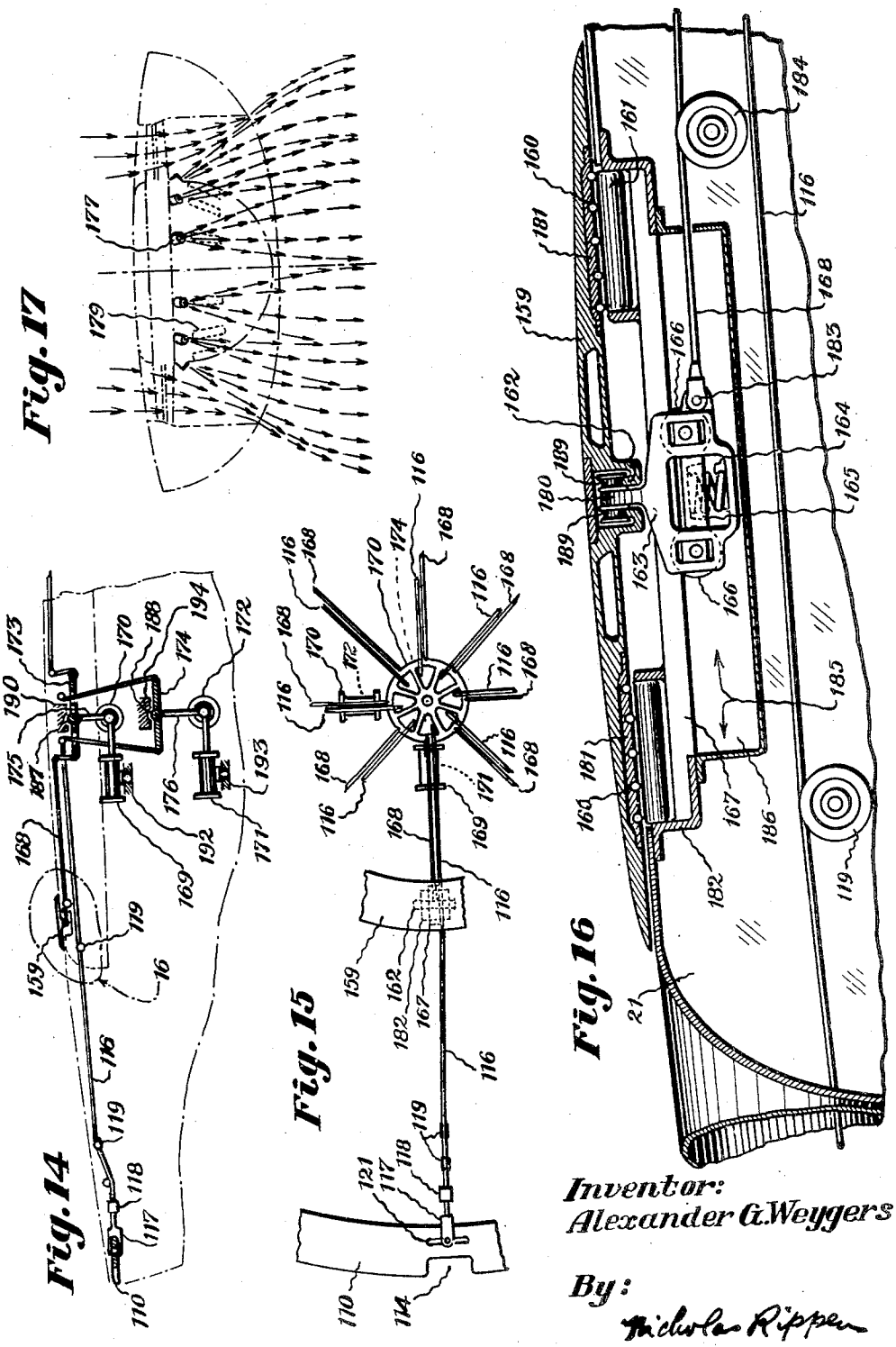

Inventor:
Alexander G. Weygers

By:
Nicholas Rippen

246 || @HighEarthOrbit_ linktr.ee/Grider2

Patented June 5, 1945 2,377,835

UNITED STATES PATENT OFFICE

2,37.,835

DISCOPTER

Alexander George Weygers, Oakland, Calif.

Application January 1, 1944, Serial No. 516,689

4 Claims. (Cl. 244—23)

My invention relates to wingless, heavier-than-air flying craft, whose outstanding example, until the time of the instant invention, has been the helicopter.

To a helicopter, a craft constructed on the principles of my invention bears a superficial resemblance, in that both types are sustained by at least one horizontal rotor. From this point on, however, all similarity between the two types of flying craft ends. A craft embodying my invention is distinguished from a helicopter in that the rotor or rotors in my craft are enclosed within a substantially vertical tunnel, the rotor regarded as a whole is mainshaftless and the external form of the craft is not very different from the familiar discus of the athlete, in common with which the craft enjoys certain aerodynamic advantages characteristic of the passage of the discus thru the air. Not only the rotors and power plant compartments but all of the usual moving and fixed protruding parts, present in both airplanes and helicopters, such as stabilizing and directing means and otherwise, are entirely enclosed within the strikingly simple and cleanly streamlined contour line of the craft when regarded from exteriorly thereof in any elevation view, thereby concealing from the casual view such parts.

The above mentioned three salient characteristics distinguishing my craft from the helicopter, set the two types apart by an extent at least as great as the difference between the helicopter and the airplane. Because of this basically new approach to the problem of designing superior flying craft, there is thereby posed a gap in generic terminology that can be filled only incompletely and awkwardly by qualifying the word, helicopter. To fill this gap, I have been compelled to coin a noun, a short, tri-syllabic term, for use now and in the future by myself and others in connection with all craft, whether designed by myself or others on the herein expounded principles, a term that connotes both the external form of the craft and its functional relationship to the helicopter. This term, selected for the title of this specification, is—discopter.

Craft embodying my invention may be sustained and propelled by a single rotor, a pair of coaxial rotors, a plurality of non-coaxial rotors, a plurality of non-coaxial pairs of coaxial rotors, or any other combination of the foregoing. For expounding said principles in a readily intelligible manner and also because it is a recommended type, particularly in the case of small craft, I have selected the type having a single pair of coaxial rotors revolving oppositely for description in this specification and for illustration in the accompanying drawings, in which—

Figure 1 is a plan view of said type as seen from above, the rotors having been removed from the view.

Figure 2 is a side elevation view thereof.

Figure 3 is a plan view thereof as seen from below, the rotors having been removed from the view.

Figure 4 is a fore or bow end elevation view thereof.

Figure 5 is an aft or stern end elevation view thereof.

Figure 6 is an enlarged, sectional view thereof, taken in the plane 6—6 in Figure 1 and as the discopter appears when in non-translational flight.

Figure 7 is a schematic sectional view thereof, taken in the plane 7—7 in Figure 1, to show the disposition of certain valves and air-currents when the discopter is in translational flight.

Figure 8 is an enlarged sectional view thereof, taken in the plane 8—8 in Figure 1.

Figure 9 is a schematic sectional view thereof, taken in the plane 9—9 in Figure 1, showing the disposition of certain valves and air-currents when the craft is in non-translational flight.

Figure 10 is an enlarged sectional view of certain parts within the circumscribed area 10 in Figure 8.

Figure 11 is an enlarged sectional view of certain parts within the circumscribed area 11 in Figure 8.

Figure 12 is an enlarged partly sectional view of certain parts within the circumscribed area 12 in Figure 1, adjacent the roof of the craft.

Figure 13 is an enlarged view of certain parts within the circumscribed area 13 in Figure 10.

Figure 14 is a schematic elevation view of certain parts adjacent the roofs of the two main bodies that are characteristic of the discopter, but embodying an optional, additional equilibrium-controlling means.

Figure 15 is a schematic plan view of the same.

Figure 16 is an enlarged sectional view of certain parts within the circumscribed area 16 in Figure 14.

Figure 17 is a schematic elevation view of a certain hub body in the craft, showing the disposition of certain rocket-type sustaining means.

Refer to Figures 3, 6 and 8. The main structure of the discopter consists of two mutually rigidly secured main bodies, one, a hub body 21, the other, a marginal body 22, disposed around, spaced from and secured to said hub body by a

247 || @HighEarthOrbit_ linktr.ee/Grider2

plurality of strength members therebetween, the space between the two bodies being a slipstream tunnel of composite form. Two of these strength members consist of narrow, deep, longitudinally extending, skin-covered hollow frames, laterally flanking said hub body, referred to herein also as keelsons; they are port keelson **23** and starboard keelson **24**. A third of the strength members is also a deep, longitudinally extending, skin-covered hollow frame, but it is wide enough to constitute therewithin a passageway for persons moving between the two main bodies. This member, also referred to as the vestibule, is indicated by **25**. A fourth of said strength members is, like members **23** and **24**, a narrow, deep, skin-covered frame, extending also longitudinally but, in this case, symmetrically or centrally of the craft at the aft or stern end thereof. It is indicated by **26** and is referred to as the aft keel. All skin-covered parts of the craft are provided with water-tight junctures so as to adapt the craft for floating on water as well as resting on land.

Marginal body **22**, by virtue of its outside disposition and its form lends itself unusually well to the provision in its outer wall of windows for maximum vision from inside of the craft. Also, it is commodious enough to provide a pilot's compartment **27**—see Figure 6—and a promenade deck all around the craft, whose floor is indicated by **28** and is referred to as the marginal floor. Hub body **21** contains main cabin **31** over engine compartment **29** under hub floor **30**.

The aforesaid strength members, together with other parts of the structure that are adjacent to them and in therewith common horizontal planes, such as wall sections of said main bodies and certain beam valves and their frames, to be referred to again below, define eight lower tunnel sections that are mutually separated sections of the previously referred to slipstream tunnel of composite form. The remainder of this tunnel consists of an upper, annular section, in which the two rotors revolve; refer also to Figures 7 and 9. Said eight lower tunnel sections are: fore inner port section **32**, contributively defined by vestibule **25** and port keelson **23**; aft inner port section **33**, contributively defined by keel **26** and port keelson **23**; fore outer port section **34**, contributively defined by the fore half section of port keelson **23**, port valve **40** and respective valve frame **41**; aft outer port section **35**, contributively defined by the aft half section of port keelson **23**, port valve **40** and respective valve frame **41**; fore inner starboard section **36**, contributively defined by vestibule **25** and starboard keelson **24**; aft inner starboard section **37**, contributively defined by keel **26** and starboard keelson **24**; fore outer starboard section **38**, contributively defined by the fore half section of starboard keelson **24**, starboard valve **42** and respective valve frame **43**; aft outer starboard section **39**, contributively defined by the aft half section of starboard keelson **24**, starboard valve **42** and respective valve frame **43**.

Refer to Figures 3, 6, 7, 8 and 9. The previously referred to upper or annular section is indicated by **44**. Accommodated by it and revolving therewithin are the upper rotor blades **45** of upper rotor **46** and the lower rotor blades **47** of lower rotor **48**, said rotors revolving in opposite directions. Main hub body **21** is thereof laterally flanked by two compartments or lobes extending from the interior thereof at the lower part thereof. They are port lobe **49** and starboard lobe **50**. These two lobes are disposed in loci where, in their absence, more or less eddying of air currents could be expected and therefore currents of little value. It is therefore thought advisable to constitute these lobes and thereby augment the total of utilizable space. Although adapted to house a variety of things, the two lobes herein contain mechanisms for actuating said valves.

Refer to Figures 6, 8, 10, 11, 12 and 13. Upper rotor **46** includes upper inner blade-mounting rotor ring **51** and upper outer blade-mounting rotor ring **52**. Lower rotor **48** includes lower inner blade-mounting rotor ring **53** and lower outer blade-mounting rotor ring **54**. The four rings are hollowed out for lightness, accessibility to bearing assemblies and to accommodate variable pitch-control mechanisms. Referring especially to Figure 11, supporting said outer rotor rings is a plurality of therebetween intervening rubber-tired thrust rollers **55**, suitably spaced from one another along the inner marginal edge of marginal main body **22**. Supporting the rotor rings **52** and **54** on those sides thereof that are opposed to the roller-**55**-adjacent sides thereof, is a plurality of rubber-tired thrust-bearing rollers **56** above and a like plurality **57** below, all suitably spaced from one another along the inner marginal edge of body **22**. Obliquely displaceable radial bearings **58** journal the "ball" ends **59** of pins **60** mounting rollers **55**.

Referring to Figure 12, lower outer rotor ring **54** is mounted in a manner whereby, when the rotor is at rest or revolving at idling speed, it is out of engagement with frictionally driven pulley **61**, but it is always in engagement with throw-out-shaft pulley **62**, whose shaft is journalled in bearings **63**, resiliently mounted in association with compression spring **64** in a manner whereby pulley **62** is continuously pushed upwardly toward rotor ring **54**. The shaft of electric motor **65** is disposed inside of a hollow shaft that mounts driven pulley **61** and the driving pulleys **66** and **67** and engages said hollow shaft thru a main pawl, said motor shaft having a sprocket **68** keyed to its end and engaging pawl sprocket **69** keyed to a common shaft with miter gear **70**, in turn driving miter gear **71**, keyed to hub **73**, which hub journals shaft **72**, the same shaft that pulley **62** is keyed to. Hub **73** is provided with pin **74** engaging helical lead **75** of sleeve **76**, which in turn mounts, thru ball thrust bearing **77**, the lever **78**, pivoted at one end thereof by pin **79** and at the other end thereof by pin **80**. Lever **78** is adapted to push and pull switch lever **81** of switch **82**, which controls the starting and stopping of electric motor **65**. The disposition of parts shown in Figure 12 is the one obtaining when the switch is off, the electric motor not turning, the driven pulley **61** being driven by rotor ring **54** because the latter is now revolving at full operating speed from the solid-line position it is now in and into which it has been pushed from the previous at-rest or idling position indicated by dot-and-dash lines **83**, expressing the upward reaction imposed on it by the air it is now displacing downwardly. In this full operating state, the higher R. P. M. of pulley **62** "over-rides" the relatively low R. P. M. otherwise imposed on the throw-out hub **73**, with the result that pin **74** causes sleeve **76** to move outwardly and carry with it switch lever **81** to be pushed correspondingly into the "off" position for motor **65**. Since motor **65** has as its function only the moderately fast revolving of gyroscopic ring **84**—to be referred to again below—when the rotors are revolving slowly or not at all, as when ending or beginning a flight, the motor **65** is designed to operate at a speed considerably less than

248 || @HighEarthOrbit_ linktr.ee/Grider2

the normal speed of the rotors, so that the aforesaid "over-riding" ensues. Pulley 62 has been provided with a pawl in similar manner as in pulley 89 in order that no slippage shall occur between rotor 54 and upward pressing pulley 62 when the rotor stands still or when its speed is less than the speed at which "over-riding" occurs.

Pulleys 66 and 67 drive, thru V-belts 85 and 86, the pulleys 87 and 88 respectively. Pulleys 87 and 88 are keyed to a shaft common to driving pulley 89, driving gyroscopic ring 84, which is supported by a plurality of sets of grooved-rimmed rollers, 90, 91 and 92, which sets are distributed at suitable intervals around marginal body along the outer margin thereof. One of said rollers, 90, and pulleys 89, 88, 87, 67, 66 and 61 are mounted in frame 122, which mounts also motor 65 and other neighboring parts.

The gyroscopic ring is a solid ring in one piece, although it may be constituted of a series of successively mutually secured segments as well. The ring is provided with mass and revolving speed adequate for its function of providing a considerable measure of gyroscopic stabilizing force on the craft.

Refer to Figures 6 and 8 and especially to 10. Said inner rotor rings are supported by a plurality of rollers 93 between the rings. Supporting the rotor rings 51 and 53 on those sides thereof that are opposed to the roller-93-adjacent sides thereof is the upper plurality of pairs of thrust rollers 94 and 95 and the lower plurality of pairs of thrust rollers 96 and 97, respectively, all of said pluralities being disposed at appropriate intervals around hub body 21 along the roof margin thereof.

Rotor rings 51 and 53 are provided also with mutually confronting, circular toothed racks, 98 and 99, respectively. Driving rotor rings 51 and 53 thru said racks is the bevel gear 100, which, together with one of said rollers 93, is keyed to shaft 101, journalled in bearing 102. Shaft 101 has, secured to the inner end thereof, the male cone clutch member 103, actuated by wheel 104 thru elements 105, member 103 engaging female cone clutch member 106 having a bevel-toothed periphery for coaction with bevel gear 107, keyed to counter shaft 108, journalled in bearing 109.

Referring to Figures 6, 8, 10 and 15 and especially to 11, the craft is provided with an outer stabilizing ring 110, also referred to as the secondary stabilizing ring, accommodated in slot 111. Ring 110 is displaceable eccentrically with reference to the vertical axis of the craft, in a horizontal direction that may be toward the bow, the stern, either beam, or obliquely. To reduce the otherwise perhaps excessive frictional relationship between the ring and its slot 111, the path of its movement is conditioned by a suitable plurality of rollers 112, secured to fork 117 and guided by guides 113, and a plurality of rollers 120, mounted on a roller pin mutual with rollers 112, and guided by slots 121 in ring 110; see especially Figure 15. Ring 110 is furthermore provided with notches 114, distributed along the outer margin thereof and freely accommodating the fixed pins 115, whose function it is to stiffen the otherwise insufficiently supported overhanging roof-margin of marginal body 22. Ring 110 is actuated by a plurality of cables 116 operating thru and attached to a corresponding plurality of forked rods 117, each journalled in a slide-bearing 118. Cables 116 are mounted on rollers 119. The function of ring 110 is a supplementary one for restoring equilibrium in response to manual operation or to an automatic pilot or to a combination thereof, supplementing the control exercised thru the structurally previously described valves, whose functioning will be described below. The integral nature of ring 110 makes it possible to displace it without resorting to push-and-pull controls. Only the one-way pulling control means in the form of cables 116, originating in a suitable control disc in the pilot's compartment is needed. Referring to Figure 8, countershaft 108 is driven, thru bevel gears 109 and 195, by shaft 196 of main power plant 144.

Referring to Figure 13, illustrating the mechanism for control of the pitch of the rotor blades, each blade shaft is geared to a thereto corresponding, individual, reversible electro servo motor 212 thru spur gears 213 and 214 and worm and pinion gears 215 and 216. Motor 212 is connected to the schematically represented electromotive force thru cables 130 and 251, the circuit thereof being completed by reversible switch 232. Switch 232 is closed or opened manually or it may be done automatically thru the medium of any one of a number of well known types of automatic pilots, schematically represented by 234, adapted to operatively respond to changes in altitude. Rails 221, 220, 219 and 250 are secured to rotor ring 51 in a manner whereby said rails are insulated from said ring.

Shaft 132 of motor 212 is connected, thru universal joints 133 and 134, to shafts 135 and 136, respectively, of the thereto flanking similar electric servo-motors, not shown, so that an acceptable degree of coordinated pitch-control of all of the rotor blades in rotor ring 51 can be attained. A similar arrangement obtains in the case of lower inner rotor ring 53. In view of the provision for an acceptable degree of coordinated pitch-control, only a single circuit, in the case of either inner rotor ring, from one of the blades to the indicating instrument is necessary.

Refer to Figures 1, 6, 7, 8 and 10. In addition to the previously referred to port and starboard valves, the craft is provided with a pair of fore or bow end valves 137, flanking vestibule 25 and functioning in lower tunnel sections 32 and 36, and a pair of aft or stern end valves 138, flanking keel 26 and functioning in lower tunnel sections 33 and 37.

The complete slipstream tunnel communicates with the exterior of the craft above by the substantially single roof opening or port 139, which may be regarded as only nominally subdivided into a plurality of ports by the grille elements, and below by the eight bottom ports 140. Roof port 139 is screened off above by a plurality of therewith coextensive, quadruple-function louver or grille panels, consisting of the hollow minor grille elements 141 and 142 and the therewith integral major grille elements 157. Elements 141 and 142 communicate interiorly thereof with one another and with major elements 157, which in turn communicate with exhaust pipe 143, extending upwardly from main power plant 144 for dissipation of the exhaust gases therefrom. Major grille elements 157 are provided with holes 145 communicating with the exterior of the craft by way of said roof port for egress therethru of said exhaust gases, as is the case with the said minor grille elements as well. It may be said that elements 141 and elements 142 and elements 157 each contributively constitute a muffler system for said main power plant, which is one of the four functions of the grille panels. A second function is the isolation of the interior of the slipstream

249 || @HighEarthOrbit_ linktr.ee/Grider2

tunnel from thereinto otherwise attracted foreign bodies, as, for example, birds. A third function is the heating of the air entering the slipstream tunnel, thereby reducing the tendency to ice-formation on critical moving and other parts. A fourth function, one that is specific to said major grille elements, 157, is to constitute rigid connecting braces—parts of the previously referred to strength members—between the two main bodies at their respective roof levels. A fifth function is conceivable: by making the grille panels of the louver type illustrated in Figure 1, but with the louver "boards" adjustable instead of fixed, the "boards" can be actuated to selectively block a part or all of the thereto corresponding, therewith coextensive roof port or ports, whereby control over the equilibrium of the craft may be thereby effected in obvious manner.

Foreign objects, such as rain, hail, snow and otherwise, passing thru the grille panels, will, upon contacting the rotor blades, be hurled centrifugally therefrom. Since unattached objects within a rotating body, upon contacting the interior members of this body, gravitate toward those parts thereof having greatest speed, therefore, the parts of greatest diameter, it follows that the rim diameter dimensions of the overlapping outer rotor rings, which increase gradually as they approach the lower rim of the lower rotor ring, will determine the path of movement of said unattached foreign bodies entering the slipstream tunnel. Once said objects have been projected centrifugally and downwardly, passing the rotor rings, the force of the downwardly directed slipstream will tend to carry the objects with it, to be ejected thru the bottom ports.

Referring to Figures 14, 15 and 16, there is illustrated here the substantially flat, eccentrically displaceable, primary stabilizing ring 159, movably secured to and overlying the upper marginal section of hub body 21 and adapted to being eccentrically displaced away from the vertical axis of the craft in any indicated direction to partially choke a desired section of the slipstream tunnel and thereby effect control over the equilibrium of the craft in a degree exceeding that provided by the previously described secondary flat or outer stabilizing ring 110. Ring 159 is referred to also as the inner flat stabilizing ring and alternatively as the slipstream-choking ring.

Substantially square housings 186, constituted of frames 182 and sections 185 are disposed at suitable intervals along the margin of hub body 21. Each housing 186 is provided with a pair of rails 167 in radial position with hub body 21, dividing the circumferential sides of the housing into two equal parts. The rails 167 engage flanged wheels 166, mounted in subframes 165, in turn resiliently mounted, thru springs 164, in major wheel-frames 163. Major frames 163 are provided with yoke-extensions 180, mounting thereto flanking flanged wheels 189, engaging rails 162, integral with ring 159. Ring 159 is provided with bearing plates 181, mounting pluralities of rollers 160, axially transversely engaging major rollers 161, mounted on rails 167 and frame 182. By this device, ring 159 is retained snugly and yet nearly frictionlessly against the hub body. Each said major wheel-frame is provided with a lug, to which a cable 168 is secured by a pin 183. Cables 168 ride on rollers 184 and are centrally joined to a central disc 173, which in turn is actuated by hydraulic cylinders 169 and 170 thru arm 175, journalled in ball joint 187, in response to the pilot's manual controls or to an automatic pilot or to both. Similarly, the cables 116, operating ring 110, terminate centrally in disc 174, actuated thru arm 176, journalled in ball joint 188, by hydraulic cylinders 171 and 172. Both ball joints 187 and 188 are fixed relatively to hub body 21. The aforesaid describes an optional additional stabilizing control device for the craft.

Refer to Figures 6, 7, 8 and 9. The fore or bow end valves 137 and the aft or stern end valves 138 are shown retracted in Figure 6, when the craft is, if in the air, in a hovering state, with the bottom parts 140 entirely unobstructed and therefore permitting the descending air currents from the rotors to continue substantially straight downwardly, providing only sustaining force for the craft.

In Figure 7, the bow end valves 137, under the action of slidable pins 148 secured to valves 137 and valve arms 146 and with the path of their movements conditioned by guides 147, have been displaced into a position wherein their inner surfaces constitute substantially well faired, aftwardly directed continuing surfaces of the fore surfaces of lower tunnel sections 32 and 36—see also Figure 3.

Similarly, in the case of stern end valves 138, under the action of slidable pins 151 secured to valves 138 and valve arms 149 and with the path of their movement conditioned by guides 150, these two valves have been displaced into positions wherein their inner curved surfaces extend aftwardly and downwardly. Obviously, the said disposition of said bow and stern end valves in Figure 7 operates to deflect the otherwise straight-downwardly directed slipstream 152 from the rotors into an aftwardly downward direction, thereby generating a propelling force on the craft in addition to a sustaining force thereon.

Refer to Figures 6, 7, 8 and 9. Port valve 40 and starboard valve 42, also referred to collectively as the beam valves, are shown in non-deflecting attitude for maximum utilization of the sustaining force generated by the descending currents thru lower tunnel sections 34, 35, 38 and 39. See also Figure 3. To correct yawing or to steer the craft, valves 40 and 42 may be suitably actuated. For example, assuming the pilot's desire to steer to the portside, the port valve can be pivoted to make it deflect the thereto corresponding currents slightly forwardly and the starboard valve pivoted to deflect the thereto corresponding currents aftwardly. Steering to the portside can be effected also by operating the portside valve alone, using it to deflect the thereto corresponding currents slightly forwardly, thereby braking the portside and without actuating the starboard valve at all, provided the center of rotation of the port and starboard valves intersects the ship's center of gravity.

In the event of a discopter type having a single rotor being used, the torque induced by the single rotor can be corrected automatically by actuating the beam valves with any one of a number of available automatic control devices. In the event of failure of either or both beam valves, the bow or stern end valves can be differentially actuated to set up yaw-correcting forces or to steer the craft or to restore equilibrium. All of the valves can be adapted to independent operation or to operation in any desired combination, under the control of the pilot or under automatic-pilot control or a combination thereof, utilizing devices that have long been familiar to the art. Since no claim is advanced respecting novelty of

250 || @HighEarthOrbit_ linktr.ee/Grider2

the actuating devices per se for said valves, because they do not constitute inventive parts of the instant invention, and to refrain from burdening this specification and accompanying drawings, no attempt is made to describe or illustrate them, excepting for a fragmentary illustration of some of the gearing actuating the starboard valve, indicated by **153** in Figure 8 and the gearing **158** actuating the fore and aft said valves.

Refer to Figure 17. In the event of breakdown of main power plant and to prevent a crash landing, the expedient of rocket sustentation is shown here being resorted to. This figure is a schematic view of the hub body provided with a series of circumferentially distributed jets **177** in the outer wall of the hub body and in the annular section of the slipstream tunnel. The jets are disposed in a manner whereby the discharge therefrom distributes as evenly as possible an annular blast filling the slipstream tunnel with a substantially balanced, downwardly directed slipstream, the power for the discharge deriving from explosive dry or liquid material of any suitable type. Suitable devices can be employed for selective use of the jets individually or for selectively determined use of their collective discharges to effect a downwardly directed force that is only slightly less than the force of gravity acting on the craft, whereby the craft can be eased down gently.

Refer to Figures 8 and 9. The craft has been shown without landing gears other than the moderately protruding bottom edges of the keel, keelsons and vestibule, which, in the case of the keelsons and vestibule, are indicated by **154**, **155** and **156** respectively. These protruding edges can be utilized for landing or resting on. The keelsons are adapted to being fitted with therein-contained retractable wheel-type landing gear or even caterpillar-type gear to facilitate the work of moving the craft about on the ground without resorting to the main power plant and rotors. This is particularly applicable to use of the craft amphibiously or for rising from and settling on water alone. Because the hull is readily adaptable to watertight construction thereof, because of the extreme flanking position of the keelsons' protruding bottom edges and because of the craft's substantially circular form, a capsizing of it in even a very heavy sea is unthinkable. The aftwardly flowing air-currents, a part of which are above the waterline, when suitably varied differentially by actuation of the two stern end valves, combined with reversed rotor-blade pitch, provides the craft with satisfactory self-docking quality and with the ability to execute other necessary movements while on the surface of the water.

In the event of a craft embodying a plurality of non-coaxial rotors, the term, marginal body, will be understood as applying to a composite structure of a plurality of hub bodies and respective slipstream tunnels other than the particular hub body and respective slipstream tunnel that happen to be under consideration.

I claim:

1. A substantially wingless, heavier-than-air flying craft, referred to as a discopter, powered by at least one main power plant and at least in greater part sustained and propelled by at least one main shaftless rotor powered by said main power plant and adapted to generate an initially downward slipstream, the main structure of the discopter consisting of a marginal body and at least one hub body, said marginal body being disposed around, spaced from and secured to said hub body by a plurality of therebetween intervening strength members, said space being a slipstream tunnel of composite form and constituted, in the upper part thereof, of an annular main tunnel section adapted to accommodate therewithin the said rotor, and, in the lower part of said tunnel, of a plurality of lower tunnel sections at least contributively defined by at least some of said strength members and including at least one port beam, at least one starboard beam, at least one bow end and at least one stern end lower tunnel section, the discopter including a plurality of quickly operable slipstream-controlling means respectively disposed in a corresponding number of said lower tunnel sections, said tunnel communicating with the exterior of the discopter, substantially at the roof thereof, by at least one roof port corresponding to said annular tunnel section, and, at the bottom of the discopter, by a plurality of bottom ports respectively corresponding to said lower tunnel sections.

2. A discopter as set forth in claim 1, at least one of said strength members being hollow and commodious enough to constitute itself into a passageway for persons between said two main bodies.

3. A discopter as set forth in claim 1, said strength members including a plurality of hollow braces between said two main bodies at their respective roof levels and adapted to function as part of a muffler system for the dissipation of the exhaust gases from said main power plant.

4. A discopter as set forth in claim 1 and including at least one grille panel disposed at said roof port, said panel being constituted, at least in appreciable part, of hollow members that are adapted to function as part of a muffler system for the dissipation of the exhaust gases from said main power plant, a part of said hollow members being relatively large and adapted to function as braces between said two main bodies at their respective roof levels.

ALEXANDER GEORGE WEYGERS.

251 || @HighEarthOrbit_ linktr.ee/Grid

PCT ORGANISATION MONDIALE DE LA PROPRIETE INTELLECTUELLE
Bureau international

DEMANDE INTERNATIONALE PUBLIEE EN VERTU DU TRAITE DE COOPERATION EN MATIERE DE BREVETS (PCT)

(51) Classification internationale des brevets 5 : B64G

A2

(11) Numéro de publication internationale: **WO 93/14973**

(43) Date de publication internationale: 5 août 1993 (05.08.93)

(21) Numéro de la demande internationale: PCT/OA93/00001

(22) Date de dépôt international: 15 janvier 1993 (15.01.93)

(30) Données relatives à la priorité:
01/MISE/DDI/PI 17 janvier 1992 (17.01.92) CM

(71)(72) Déposant et inventeur: DANGBO, Akouété, Vincent [TG/TG]; D.G.T.C.P (CASEF), B.P. 324, Lomé (TG).

(81) Etats désignés: US, (brevet européen) (AT, BE, CH, DE, DK, ES, FR, GB, GR, IE, IT, LU, MC, NL, PT, SE).

Publiée
Sans rapport de recherche internationale, sera republiée dès réception de ce rapport.

(54) Title: SPACE VESSEL SHAPED LIKE A FLYING SAUCER

(54) Titre: VAISSEAU SPATIAL EN FORME DE SOUCOUPE VOLANTE

(57) Abstract

Space vessel shaped like a flying saucer consisting of a disk-tank (1) on which are mounted the vessel's engines (2a, 2b) and rocket engines (3a, 3b) designed to impart a helicoidal movement to balance and overcome the earth's attraction, thereby enabling the vessel to climb and be suspended in space. Other jet engines (14a, 14b) and engines (15a, 15b) mounted at the top and base of the flight deck or cockpit (an area at the centre of the disk-tank not subject to rotation) impart to the rotating and suspended vessel, a translational, horizontal or oblique movement. The high frequency rotation of the disk-tank is accompanied by cavitation in the ambient medium with the result that the surrounding atmospheric layers are not longer able to offer a resistance to the vessel's passage.

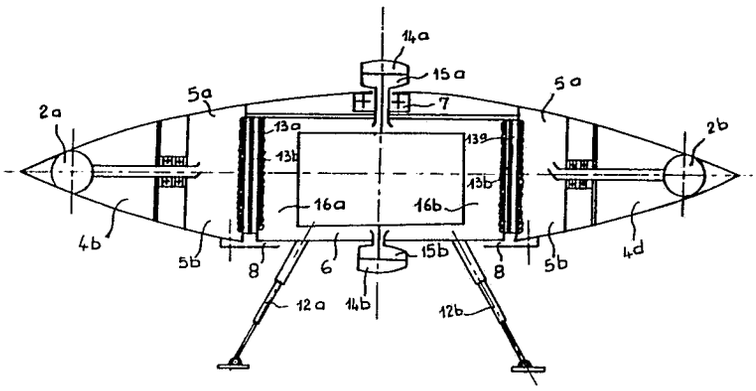

(57) Abrégé

L'invention a pour objet un vaisseau spatial en forme de soucoupe volante. C'est un disque-réservoir (1) auquel des réacteurs d'avion (2a, 2b) et des moteurs de fusée (3a, 3b) sont fixés dans le but de lui imprimer un mouvement hélicoïdal destiné à équilibrer, à vaincre l'attraction terrestre afin qu'il puisse se hisser et se maintenir en suspension dans l'espace. D'autres réacteurs (14a, 14b) et moteurs (15a, 15b) sont prévus, au sommet et à la base de l'habitacle, cabine de commande (une zone au centre du disque-réservoir mais soustraite au tournoiement) pour imprimer au vaisseau tournoyant et en suspension dans l'espace un mouvement de translation horizontale ou oblique. Le tournoiement à haute fréquence du disque-réservoir s'accompagne du phénomène de cavitation dans le milieu ambiant et de ce fait, les couches atmosphériques environnantes n'ont plus de consistance à pouvoir s'opposer au passage du vaisseau.

252 || @HighEarthOrbit_ linktr.ee/Grider2

UNIQUEMENT A TITRE D'INFORMATION

Codes utilisés pour identifier les Etats parties au PCT, sur les pages de couverture des brochures publiant des demandes internationales en vertu du PCT.

AT	Autriche	FR	France	MR	Mauritanie
AU	Australie	GA	Gabon	MW	Malawi
BB	Barbade	GB	Royaume-Uni	NL	Pays-Bas
BE	Belgique	GN	Guinée	NO	Norvège
BF	Burkina Faso	GR	Grèce	NZ	Nouvelle-Zélande
BG	Bulgarie	HU	Hongrie	PL	Pologne
BJ	Bénin	IE	Irlande	PT	Portugal
BR	Brésil	IT	Italie	RO	Roumanie
CA	Canada	JP	Japon	RU	Fédération de Russie
CF	République Centrafricaine	KP	République populaire démocratique de Corée	SD	Soudan
CG	Congo			SE	Suède
CH	Suisse	KR	République de Corée	SK	République slovaque
CI	Côte d'Ivoire	KZ	Kazakhstan	SN	Sénégal
CM	Cameroun	LI	Liechtenstein	SU	Union soviétique
CS	Tchécoslovaquie	LK	Sri Lanka	TD	Tchad
CZ	République tchèque	LU	Luxembourg	TG	Togo
DE	Allemagne	MC	Monaco	UA	Ukraine
DK	Danemark	MG	Madagascar	US	Etats-Unis d'Amérique
ES	Espagne	ML	Mali	VN	Viet Nam
FI	Finlande	MN	Mongolie		

253 || @HighEarthOrbit_ linktr.ee/Grider3

VAISSEAU SPATIAL EN FORME DE SOUCOUPE VOLANTE

Plusieurs types d'engins de transport sont, ou déjà conçus et réalisés, ou en projet : aéroglisseur, train à grande vitesse, hélicoptère, avion, fusée, navette spatiale etc.

Tous présentent l'insuffisance majeure d'avoir à percer les couches atmosphériques lors de leur déplacement, forçant ainsi leur passage.Or,cette dernière développe une réaction : c'est la résistance atmosphérique.

En considérant les aéronefs classiques que sont l'avion et l'hélicoptère, le premier, pour se déplacer nécessite une force de traction qui doit vaincre la traînée Rx et la pesanteur P par la portance Rz. La résultante R de Rx et Rz a pour valeur :

$R = 1/2\ e\ S\ V^2\ C$, Fig. 1.

Quant au second, en l'absence d'une force de traction proprement dite, la traînée portée vers l'avant lui sert de force de traction, Fig. 2.

Dans l'un comme dans l'autre cas la résistance atmosphérique constitue un gros obstacle à leur mouvement à grande vitesse ; c'est un handicap inhérent au mode de déplacement linéaire à travers les couches atmosphériques. Par exemple, une nouvelle navette spatiale, projet de la NASA pour 1999, fera 5000 km/h dans l'atmosphère contre 28000 km/h dans le vide cosmique.

Par ailleurs, en dehors de la fusée, les engins spatiaux classiques prennent appui sur les couches atmosphériques pendant leur évolution. L'équilibre précaire qui s'instaure entre la pesanteur P et la portance Rz est tel que toute panne des moteurs créant la force de traction entraîne la chute libre des aéronefs qui s'écrasent souvent au sol.

L'invention se propose de remédier à ces inconvénients. Elle a pour objet un vaisseau spatial de transport d'une conception fondamentalement différente car son évolution résulte de l'association de deux mouvements, à savoir : le

254 || @HighEarthOrbit_ linktr.ee/Grider2

mouvement de rotation ou de tournoiement et le mouvement de translation (verticale, horizontale ou oblique), ceci à l'instar de la planète Terre ou du morceau de surface plane lancé dans l'espace.

La description qui va suivre, en regard des dessins annexés donnés à titre d'exemple non limitatif, fera bien comprendre comment l'invention peut être réalisée. Les particularités qui ressortent, tant du texte que des dessins faisant bien entendu partie de ladite invention.

La Figure 1 est une représentation des forces mises en jeu par un avion.

La Figure 2 est une représentation des forces mises en jeu par un hélicoptère.

La figure 3 est une vue de dessus du nouveau vaisseau.

La figure 4 est une vue de profil.

La figure 5 est une vue en coupe du vaisseau suivant la ligne A - A de la figure 3.

La figure 6 est une vue de dessous.

Les figures 7a, 7b, 7c, 7d, 7e illustrent différentes étapes du mouvement de déplacement du vaisseau d'un lieu à un autre.

Les figures 8a et 8b sont des représentations des forces mises en jeu par le nouveau vaisseau.

L'invention, une nouvelle génération de vaisseau spatial en forme de SOUCOUPE VOLANTE, représenté à titre d'exemple sur la Fig. 4, est composé pour l'essentiel, d'un réservoir de substances propulsives 1 de forme discale, forme aérodynamique par excellence, auquel sont fixés des réacteurs classiques d'avion 2a, 2b et des moteurs de fusée 3a, 3b disposés de manière que, mis en marche, leurs poussées engendrent l'effet de couple de force sur le réservoir ou disque-réservoir 1.

Les réacteurs et moteurs sont inclinables de quelques degrés vers le ciel et vers le sol. Ils ont pour fonction de créer des poussées dans le but d'abord, de faire tournoyer le disque-réservoir et de lui imprimer ensuite un mouvement d'ascension verticale lorsqu'ils sont légèrement inclinés vers le sol ou au contraire, un mouvement de descente

255 | | @HighEarthOrbit_ linktr.ee/Grider2

verticale quand ils sont inclinés vers le ciel : l'association -mouvement de rotation mouvement de translation verticale- constitue le Mouvement Hélicoïdal dont la mesure du pas d'hélice est égale à :

$h = 2\pi v / w$.

La force ascensionnelle est créée dans le but d'équilibrer, de vaincre l'attraction que la terre exerce sur la masse du vaisseau afin qu'il puisse se hisser et se maintenir en suspension dans l'espace. Cette fonction du mouvement hélicoïdal correspond pratiquement à celle de la portance Rz de l'hélicoptère, Fig. 2, Fig. 7a et 7c.

En suspension dans l'espace, le vaisseau prend appui sur un coussin aérodynamique résultant des poussées des réacteurs ou des moteurs horizontaux en rotation.

Comparativement à la jupe d'air de l'aéroglisseur qui freine quelque peu le véhicule en déplacement à cause de la voilure de bordage, le coussin aérodynamique du vaisseau, sans bordage, est essentiellement fongible et fugitif, autrement dit constamment renouvelé ; il n'entrave aucunement le vaisseau dans son mouvement de translation, lequel flotte au dessus tout en y prenant appui.

Une rotation à haute fréquence du disque-réservoir dans l'atmosphère va provoquer le phénomène de cavitation dans le milieu ambiant; il s'ensuit une pulvérisation accompagnée de l'ionisation de l'atmosphère environnante en ce sens que les molécules d'air sont fracassées au passage du vaisseau. Dès lors, les couches atmosphériques vont manquer de consistance à pouvoir résister au passage du vaisseau à travers elles, quelle que fut sa vitesse.

Pour que le vaisseau serve de moyen de transport sécurisant, l'on ne saurait aménager des cabines dans le disque-réservoir on de celui-ci va engendrer une puissante force centrifuge qui étoufferait tout être vivant s'y trouvant.

C'est pour contourner cette situation peu confortable qu'il est pratiqué au milieu du disque-réservoir une zone dite "zone de tranquillité" parce que soustraite du

256 || @HighEarthOrbit_ linktr.ee/Grider2

tournoiement, pour servir d'habitacle et de cabine de commande 6, Fig. 5.

L'habitacle est donc monté sur systèmes de roulement à billes 7 ou sur systèmes de sustentation magnétique 8 ; des techniques équivalentes de substitution pouvant être utilisées à bon escient. Il s'insère parfaitement dans la forme discale d'ensemble afin d'éviter tout frottement avec les couches atmosphériques àla différence de la carlingue de l'hélicoptère qui se présente comme une masse énorme pendant sous les hélices.

Des tuyères 17a, 17b, 17c, 17d sont disposées à la base de l'habitacle pour lui assurer une meilleure stabilité ; elles servent aussi à incliner ou à redresser le vaisseau dans son ensemble, Fig 7b, 7d ; quatre béquilles 12a, 12b, 12c, 12d composent le piédestal du vaisseau au repos. L'habitacle comporte aussi une ou plusieurs portes d'accès munies d'échelle 11, des hublots 9, une ou plusieurs caméras 10 permettant une vue sur l'extérieur, Fig; 6.

Des électroaimants 13a, Fig. 5 disposés en ceinture autour de l'habitacle et 13b, Fig. 5 sur la paroi interne du disque-réservoir génèrent puis drainent des courants électriques destinés aux dispositifs électriques et électroniques à bord du vaisseau.

Pour imprimer un mouvement de translation au vaisseau en suspension dans l'espace et tournoyant, d'autres séries de réacteurs d'avion 14a, 14b doublés de moteurs de fusée 15a, 15b, Fig. 5 sont prévus, les uns au sommet, les autres à la base de l'habitacle. Donc, contrairement à la première série de réacteurs 2a, 2b et de moteurs 3a, 3b qui sont fixés au disque-réservoir et sont horizontaux, ceux de la seconde série, à savoir 14a, 14b et 15a, 15b sont portés par l'habitacle ; ils ont par conséquent une immobilité relative par rapport au mouvement rotatif du disque-réservoir, faute de quoi, le vaisseau serait pris dans un mouvement incontrôlable. Néanmoins, ils sont eux aussi inclinables de quelques degrés vers le ciel et vers le sol, selon que l'on veuille pencher ou redresser le vaisseau. Dans tous les cas,

257 | | @HighEarthOrbit_ linktr.ee/Grider2

ils sont verticaux, parallèles dans le plan et fonctionnent de façon simultanée afin que le vaisseau ne fasse pas de tonneaux. Ils sont donc fixés, eux autres à l'habitacle, lequel contient aussi leurs réservoirs de substances propulsives 16a, 16b, Fig. 5.

Ils ont pour rôle de développer des poussées devant imprimer au vaisseau déjà en suspension dans l'espace, tournoyant et flottant au dessus du coussin aérodynamique qu'il génère par ailleurs, un mouvement de translation soit horizontale, soit oblique suivant les besoins, Fig. 7b, 7c, 7d.

Pendant qu'il accomplit le mouvement de translation, le vaisseau est affranchi d'une part, de l'attraction terrestre, laquelle est équilibrée, vaincue par le mouvement hélicoïdal, d'autre part, de la résistance atmosphérique car, de part son profil aérodynamique et aussi du fait qu'il tournoie, le vaisseau tranche pour ainsi dire, les couches atmosphériques, fracassant au passage les molécules d'air ; il en résulte donc que les couches atmosphériques manquent de consistance à pouvoir résister au passage du vaisseau, quelle que fut sa vitesse.

Au lieu de percer donc les couches atmosphériques comme il en est des engins classiques, le vaisseau en forme de SOUCOUPE VOLANTE glisse gracieusement à travers elles, sans donner lieu au bang.

En somme, l'action des poussées des réacteurs et moteurs horizontaux consiste d'abord, à équilibrer, à vaincre l'attraction que la terre exerce sur la masse du vaisseau, Fig. 8a, ensuite, à pulvériser, à ioniser le milieu ambiant. Dès lors, les poussées de la seconde série de réacteurs et moteurs ont le champ libre pour imprimer au vaisseau une vitesse maximale, Fig. 8b. Celui-ci évolue alors comme dans l'ESPACE LIBRE, jusque là considéré comme étant du domaine de la théorie ; il est caractérisé par l'absence de toutes entraves telles que l'attraction terrestre et la résistance atmosphérique. De ce fait :

a) la moindre force de propulsion suffit à imprimer une accélération au vaisseau :

258 | | @HighEarthOrbit_ linktr.ee/Grider2

a = F : m avec a pour l'accélération, F la poussée et m la masse du vaisseau. A titre d'exemple : alors qu'une fusée classique de 100 t développant une poussée de 90 t ne bougerait pas du sol puisque l'attraction terrestre produit un effet supérieur à celui de la poussée, le vaisseau en forme de SOUCOUPE VOLANTE de 100 t hissé dans l'espace et dont les réacteurs ou moteurs verticaux développent une poussée de 90 t, connaîtrait une accélération de 8,829 m/s², (en supposant l'accélération constante) ;

b) la vitesse du vaisseau est quasiment directement proportionnelle à la vitesse d'éjection de gaz des réacteurs et moteurs 14a, 14b, 15a, et 15b :

v = c x ln (m.in. :m.fin.), ln(m.in. : m.fin.) étant considéré comme égal à 1 pour simplifier les calculs.

Ainsi sans big bang, bourdonnant à peine, baignant dans une auréole due à l'ionisation de l'atmosphère environnante, (résultat de molécules d'air fracassées), le vaisseau en forme de SOUCOUPE VOLANTE franchissant le cap de la vitesse critique des 11,19 km/s, s'affranchit, dans un premier temps, de la Gravitation terrestre.

Nota Bene : a) le vaisseau est équipé à la fois de réacteurs d'avion et de moteurs de fusée, les premiers étant prévus pour son évolution dans l'atmosphère, les seconds pour prendre la relève dans l'au-delà ;

b) bien que les pannes éventuelles de réacteurs et ou de moteurs de fusée en plein vol donnent lieu à plusieurs cas de figure, il ressort de leur analyse l'appréciation générale que, laissé à lui-même en plein vol, le vaisseau va pouvoir accomplir un vol plané pour se poser en douceur au sol.

c) l'application des principes de la Magnéto-Hydro-Dynamique au vaisseau en forme de SOUCOUPE VOLANTE viendrait à point nommé pour le rendre autonome au plan énergétique.

259 | | @HighEarthOrbit_ linktr.ee/Grider2

REVENDICATIONS

1-Vaisseau spatial en forme de SOUCOUPE VOLANTE tel que représenté à titre d'exemple sur les Fig. 4 et 5 se caractérise par une forme discale et une évolution résultant de la combinaison de deux mouvements que sont : le mouvement de rotation ou de tournoiement et le mouvement de translation.

2-Vaisseau spatial selon la revendication 1, caractérisé par des réacteurs classiques d'avion 2a, 2b, et des moteurs de fusée 3a, 3b fixés à un réservoir de forme discale 1 et disposés de manière que, mis en marche, leurs poussées engendrent l'effet de couple de force pour imprimer un mouvement hélicoïdal à l'ensemble du dispositif en vue d'équilibrer l'attraction que la terre exerce sur sa masse, Fig. 8a.

3-Vaisseau spatial selon la revendication 2, caractérisé par le fait que, hissé dans l'espace celui-ci flotte au dessus d'un coussin aérodynamique essentiellement fongible et fugitif constitué par les poussées des réacteurs ou des moteurs horizontaux en rotation, Fig. 7a, 7c.

4-Vaisseau spatial selon la revendication 1, caractérisé par le fait que, pour servir de moyen de transport sécurisant, une zone de tranquillité c'est-à-dire soustraite du tournoiement est conçue au centre du disque-réservoir : c'est l'habitacle et cabine de commande 6.

5-Vaisseau spatial selon la revendication 1, caractérisé par une seconde série de réacteurs 14a, 14b et de moteurs 15a, 15b, fixés cette fois à l'habitacle et dont les poussées sont destinées à imprimer à l'ensemble du dispositif un mouvement de translation horizontale ou oblique, Fig. 7b, 7d.

6 - Vaisseau spatial selon les revendication 2 et 5, caractérisé par une forme aérodynamique, des mouvements de

260 || @HighEarthOrbit_ linktr.ee/Grider2

tournoiement et de translation, lesquels contribuent à fracasser les molécules d'air, à pulvériser le milieu ambiant, bref à ioniser l'atmosphère environnante et à trancher les couches atmosphériques au passage, n'occasionnant plus de résistance atmosphérique, partant plus de bang.

7 - Vaisseau spatial selon les revendications 1 à 6, caractérisé par le fait que, l'équilibration de l'attraction terrestre par le mouvement hélicoïdal, le coussin aérodynamique fongible et fugitif, l'absence de résistance atmosphérique et de bang, tous ces facteurs réunis engendrent les conditions d'ESPACE LIBRE lui favorisant un mouvement de translation à très grande vitesse.

261 || @HighEarthOrbit_ linktr.ee/Grider2

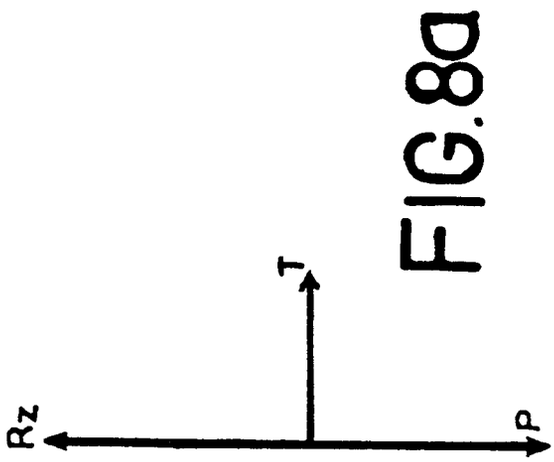

FIG.8a

FIG.8b

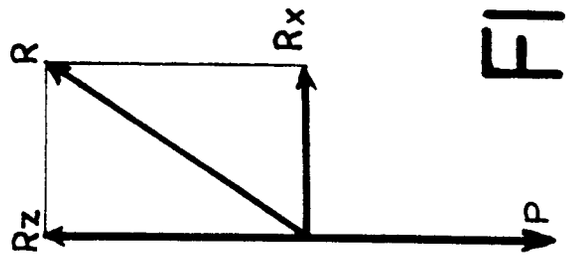

FIG.2

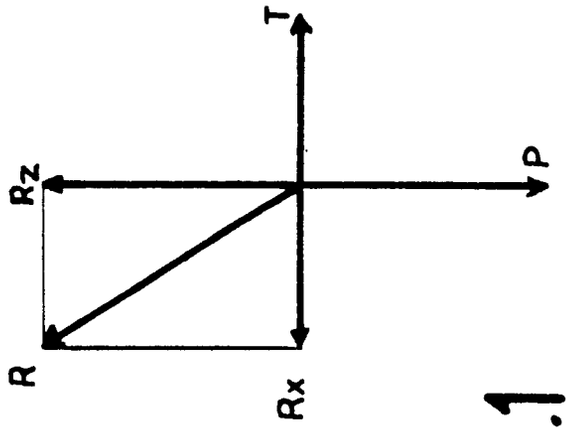

FIG.1

262 || @HighEarthOrbit_ linktr.ee/Grider2

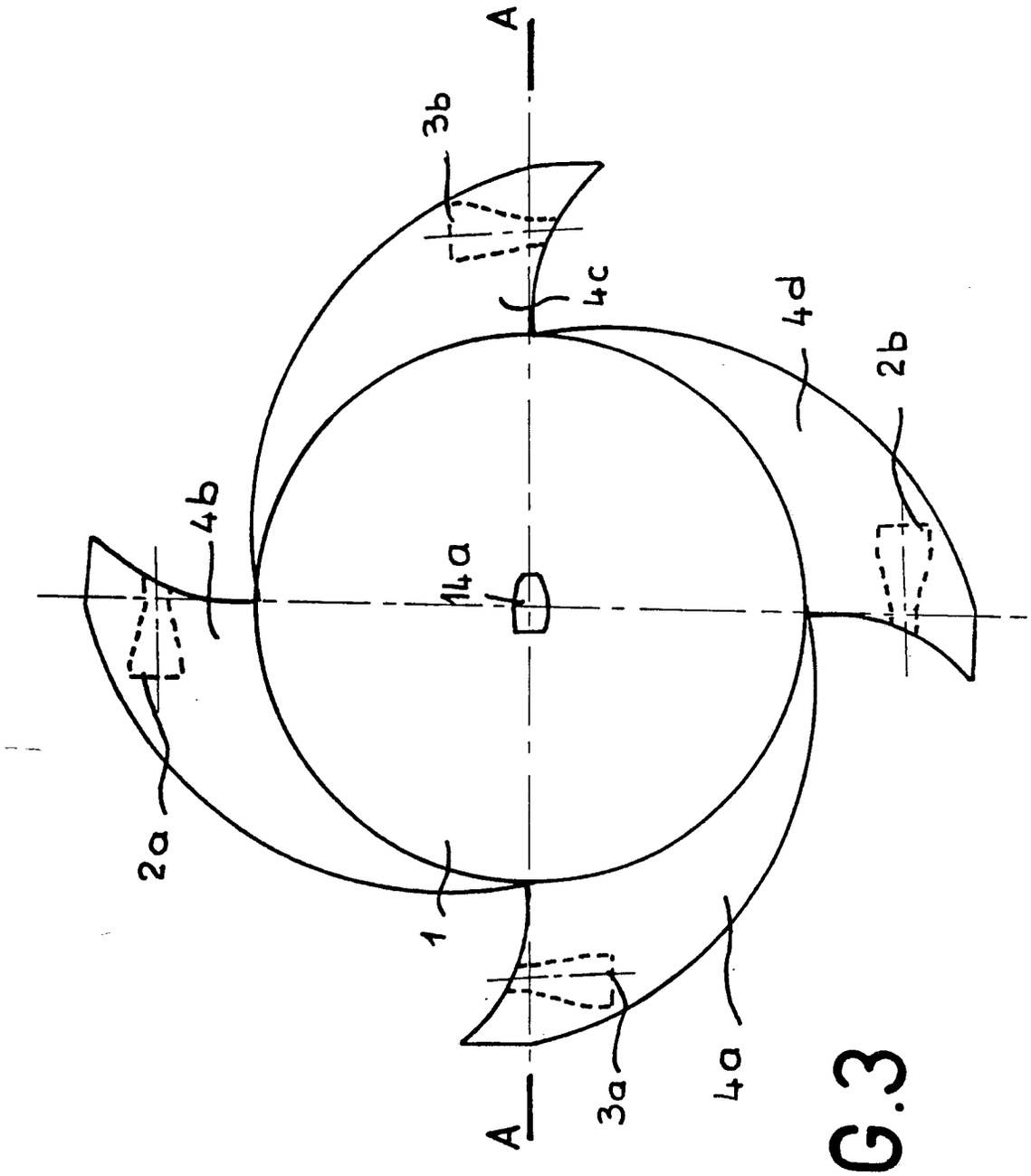

FIG.3

263 || @HighEarthOrbit_ linktr.ee/Grider2

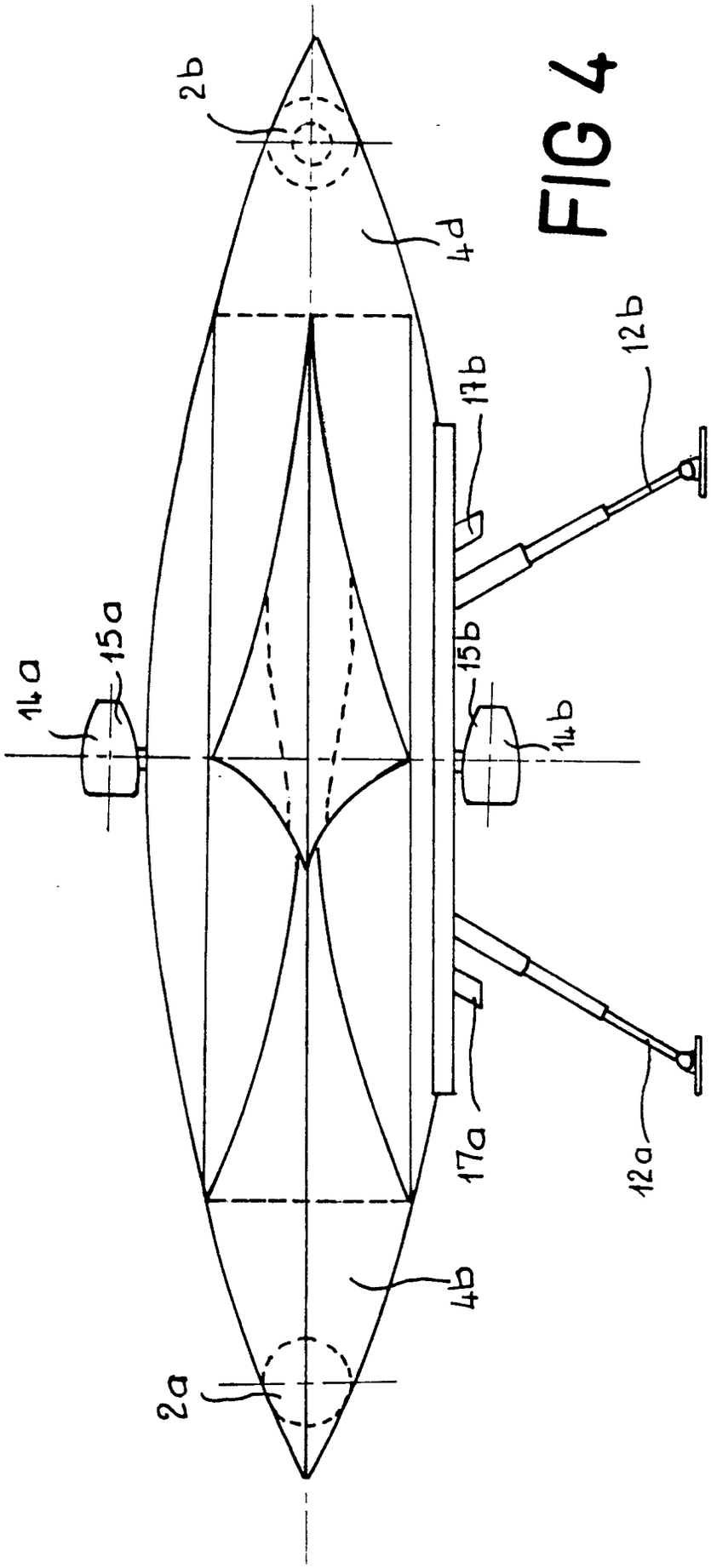

FIG 4

264 || @HighEarthOrbit_ linktr.ee/Grider2

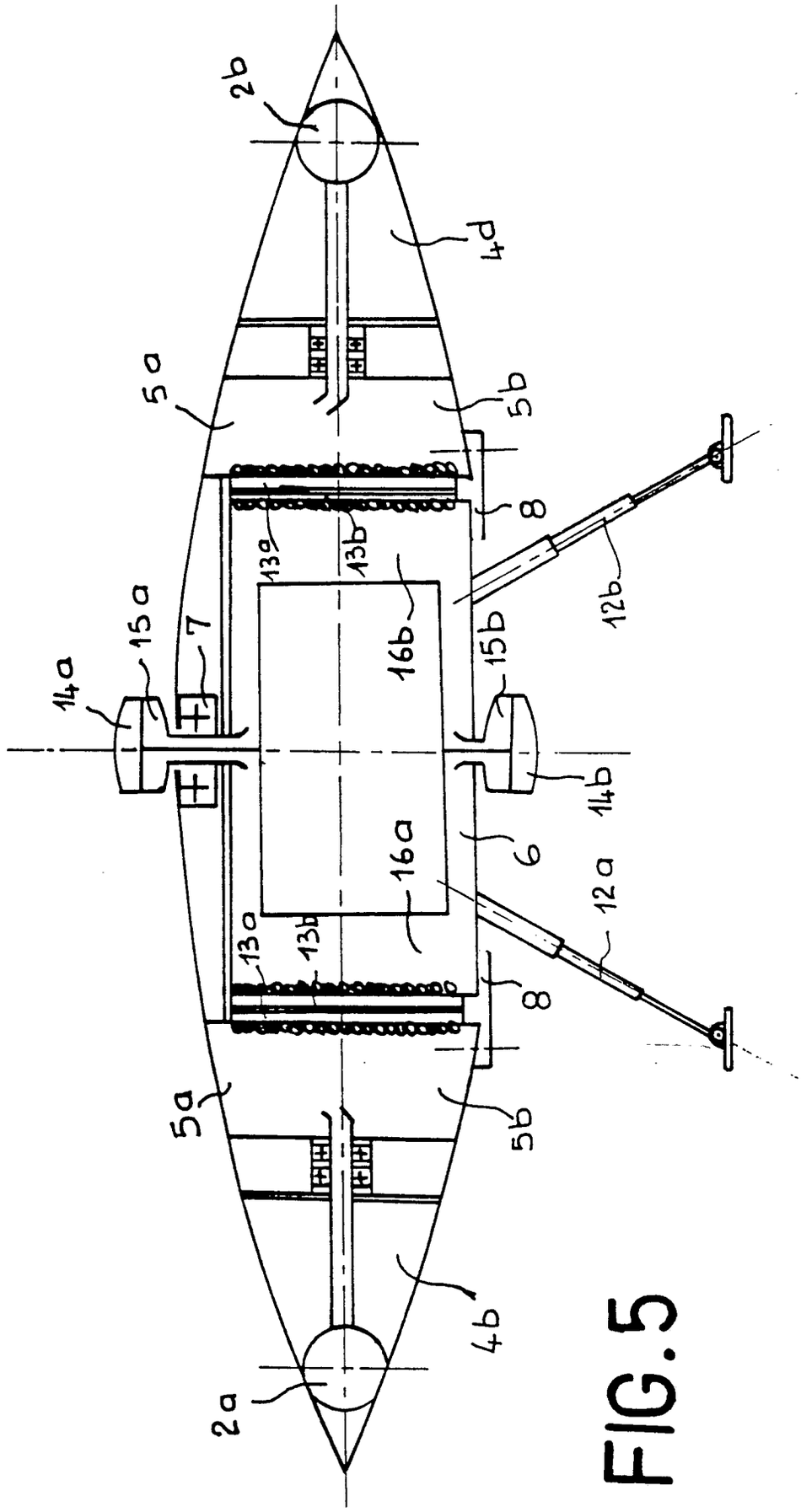

FIG. 5

265 || @HighEarthOrbit_ linktr.ee/Grider2

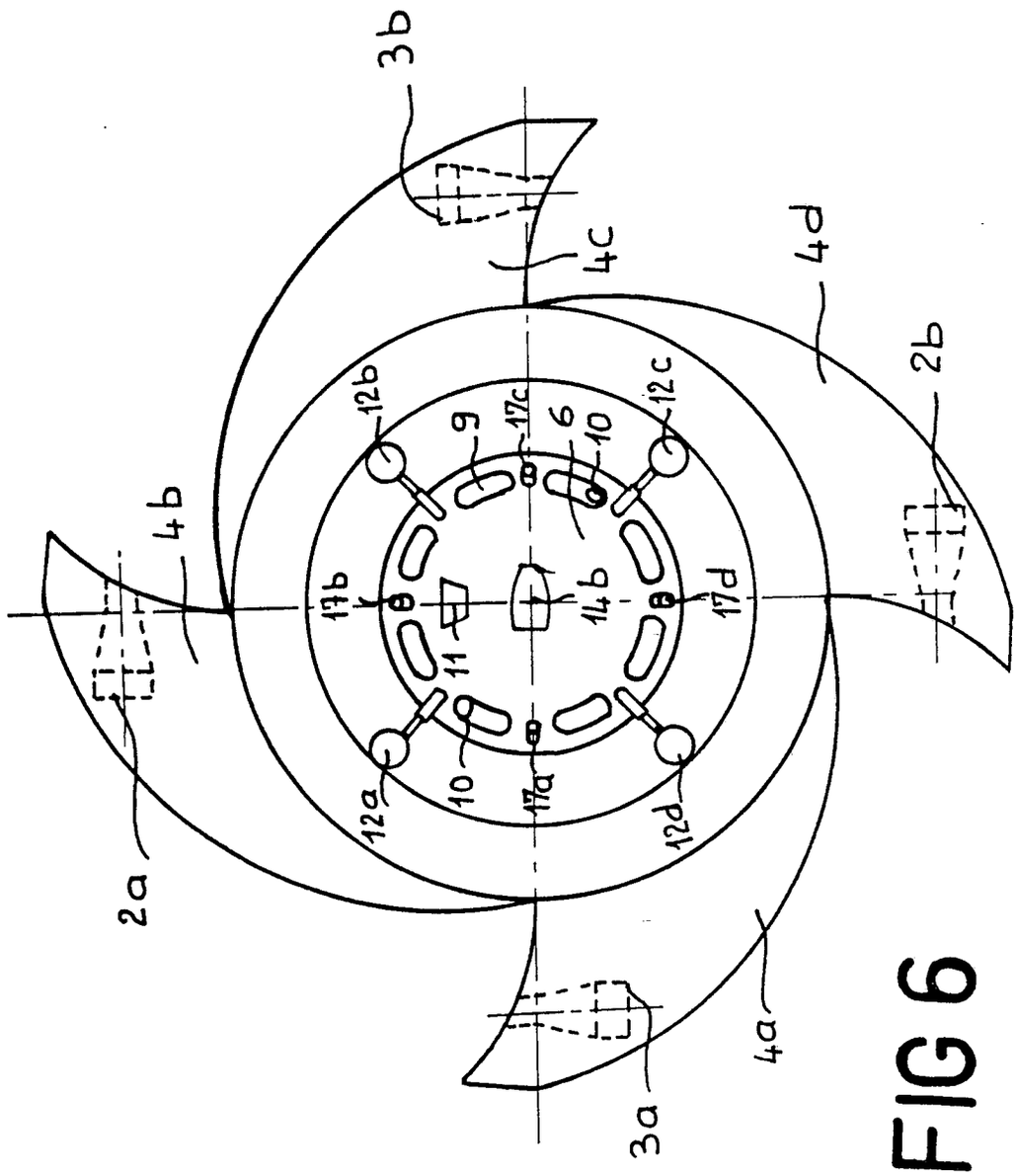

FIG 6

266 || @HighEarthOrbit_ linktr.ee/Grider2

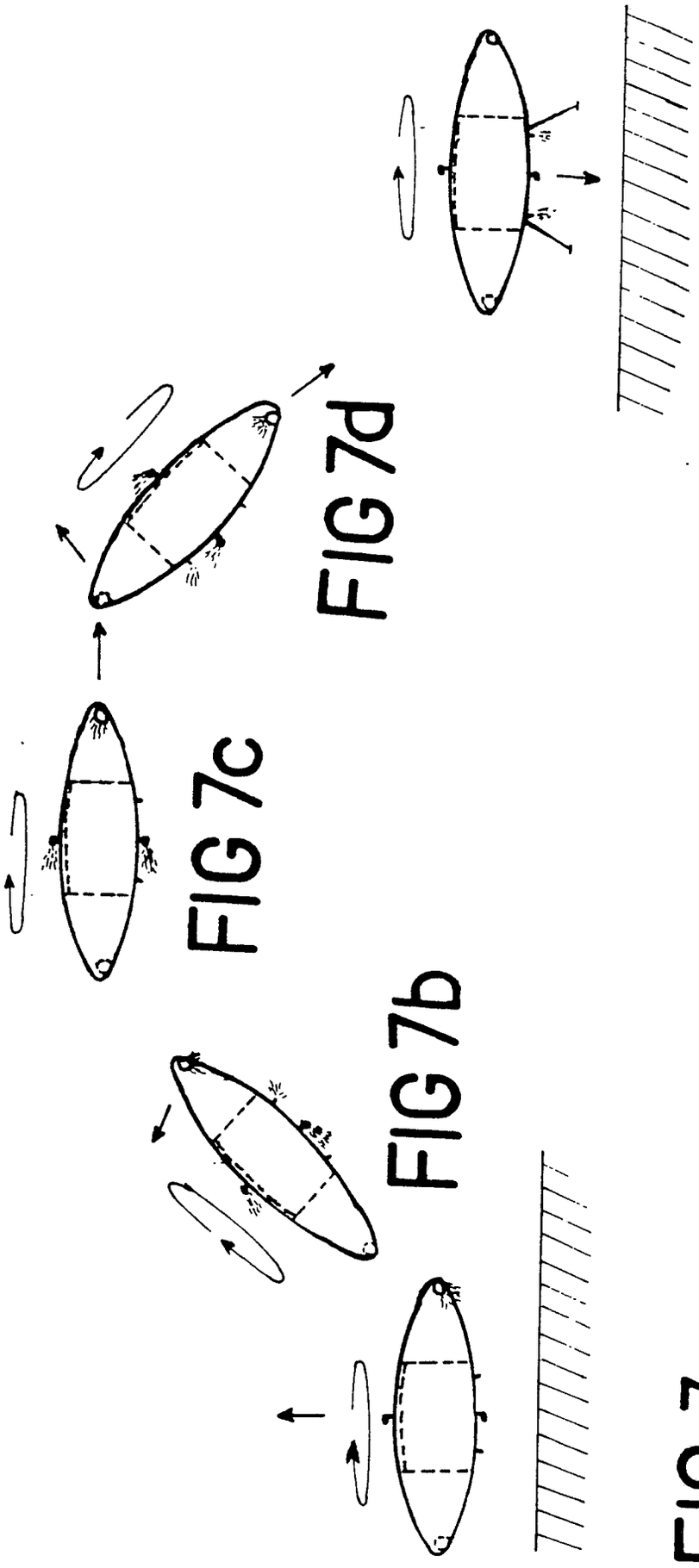

FIG 7a

FIG 7b

FIG 7c

FIG 7d

FIG 7e

267 || @HighEarthOrbit_linktr.ee/Grider2

US006179250B1

(12) **United States Patent**
Waters

(10) **Patent No.: US 6,179,250 B1**
(45) **Date of Patent: Jan. 30, 2001**

(54) **AIR AND SPACE VEHICLE PROPULSION SYSTEM**

(76) Inventor: **Laurence Waters**, 541 Stone St., Watertown, NY (US) 13601

(*) Notice: Under 35 U.S.C. 154(b), the term of this patent shall be extended for 0 days.

(21) Appl. No.: **09/247,961**

(22) Filed: **Feb. 10, 1999**

(51) **Int. Cl.**[7] **B64C 27/00**
(52) **U.S. Cl.** **244/62**; 244/172
(58) **Field of Search** ..... 244/62, 53 R, 244/172, 158 R

(56) **References Cited**

U.S. PATENT DOCUMENTS

3,095,163	*	6/1963	Hill	244/62
3,150,363		9/1964	Finvold	343/59 A
3,151,325		9/1964	Kompfuer	343/100 AM
3,169,245		2/1965	Cutler	343/100 ST
3,373,430		3/1968	Croswell et al.	343/773
3,495,791	*	2/1970	Drell et al.	244/172
3,504,868	*	4/1970	Engelberger	244/172
3,656,166		4/1972	Klopach et al.	343/773
3,662,554	*	5/1972	De Broqueville	244/62
4,253,190		2/1981	Czonka	244/62
4,663,932	*	5/1987	Cox	60/200.1
4,704,732		11/1987	Czonka	244/62
5,142,861	*	9/1992	Schlicher et al.	60/203.1
5,818,649	*	10/1998	Anderson	359/726

* cited by examiner

Primary Examiner—J. Woodrow Eldred
(74) *Attorney, Agent, or Firm*—Bernhard P. Molldrem, Jr.

(57) **ABSTRACT**

A propulsion system for aerospace vehicles employs dipole radiators in an interlayer space between outer and inner layers of the vehicle hull. Microwaves are applied, via a control console, to the radiators. The hull may be configured as sectors, and energy may be applied sector by sector to control levitation and propulsion. The outer hull layer can have a grooved inner surface, and may be formed of a titanium or beryllium alloy.

8 Claims, 4 Drawing Sheets

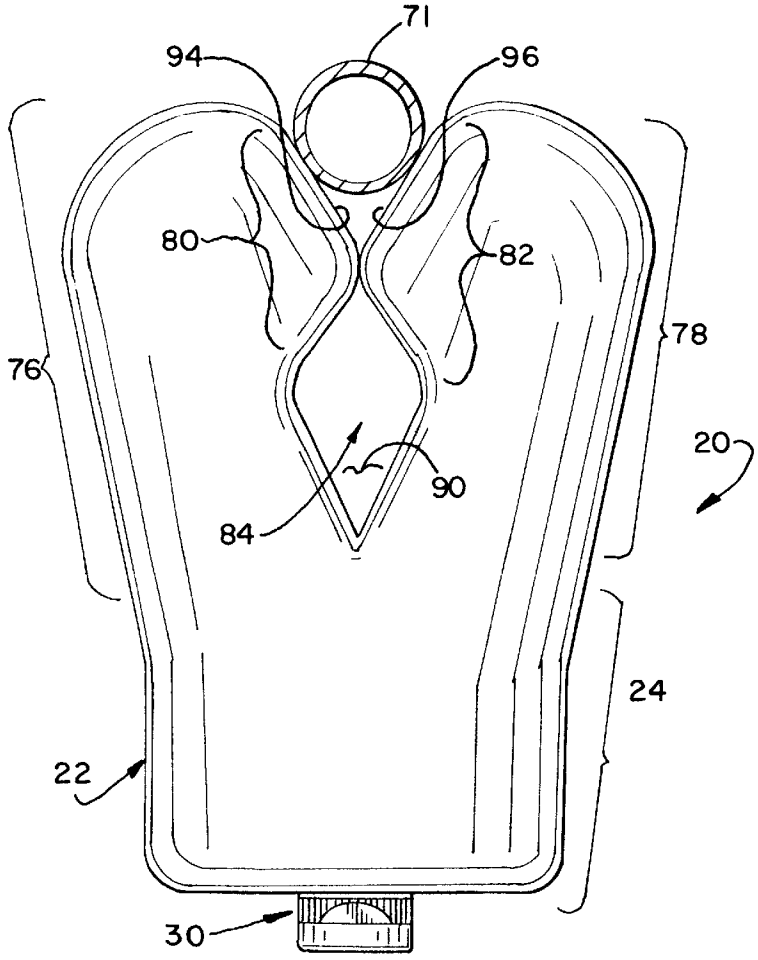

268 || @HighEarthOrbit_ linktr.ee/Grider2

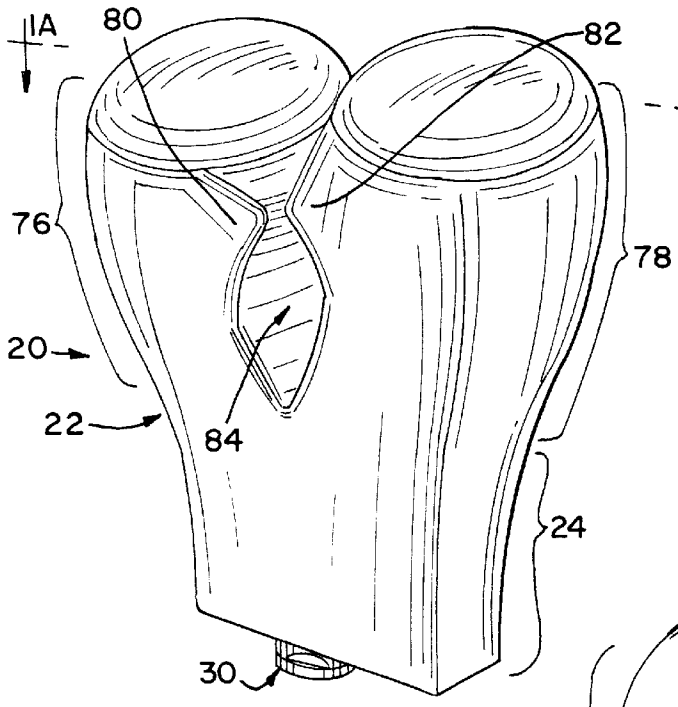

FIG. 1

FIG. 1A

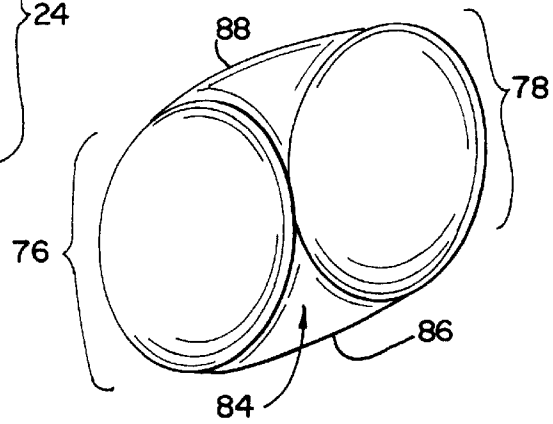

FIG. 2

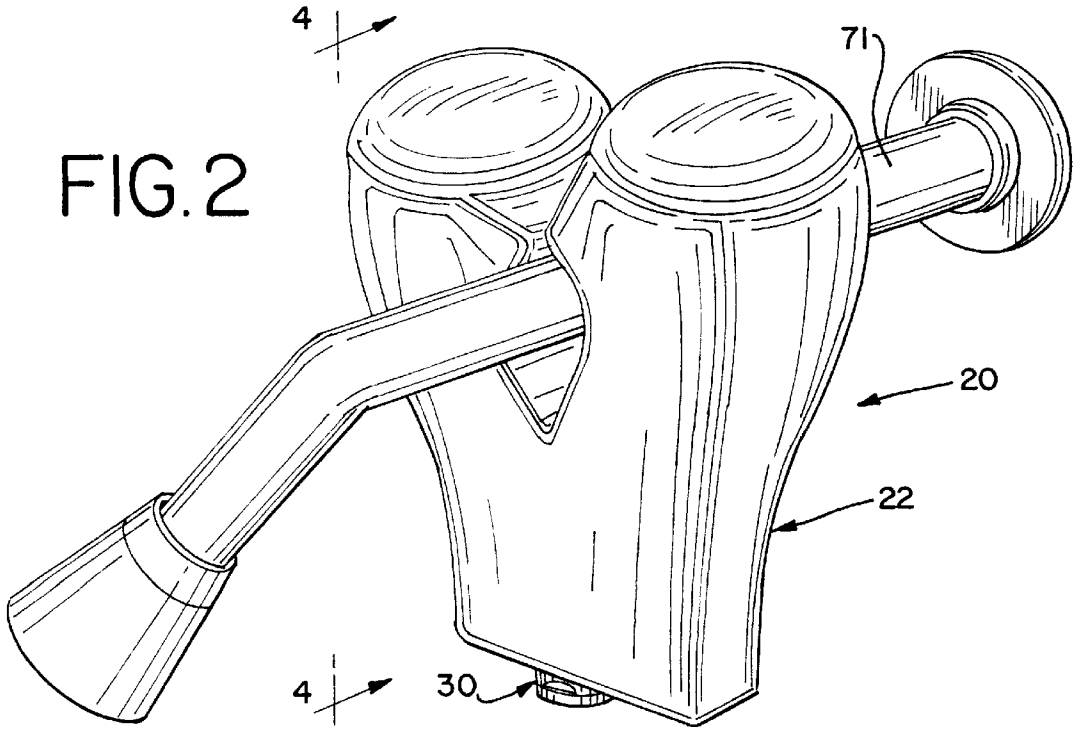

269 || @HighEarthOrbit_ linktr.ee/Grider2

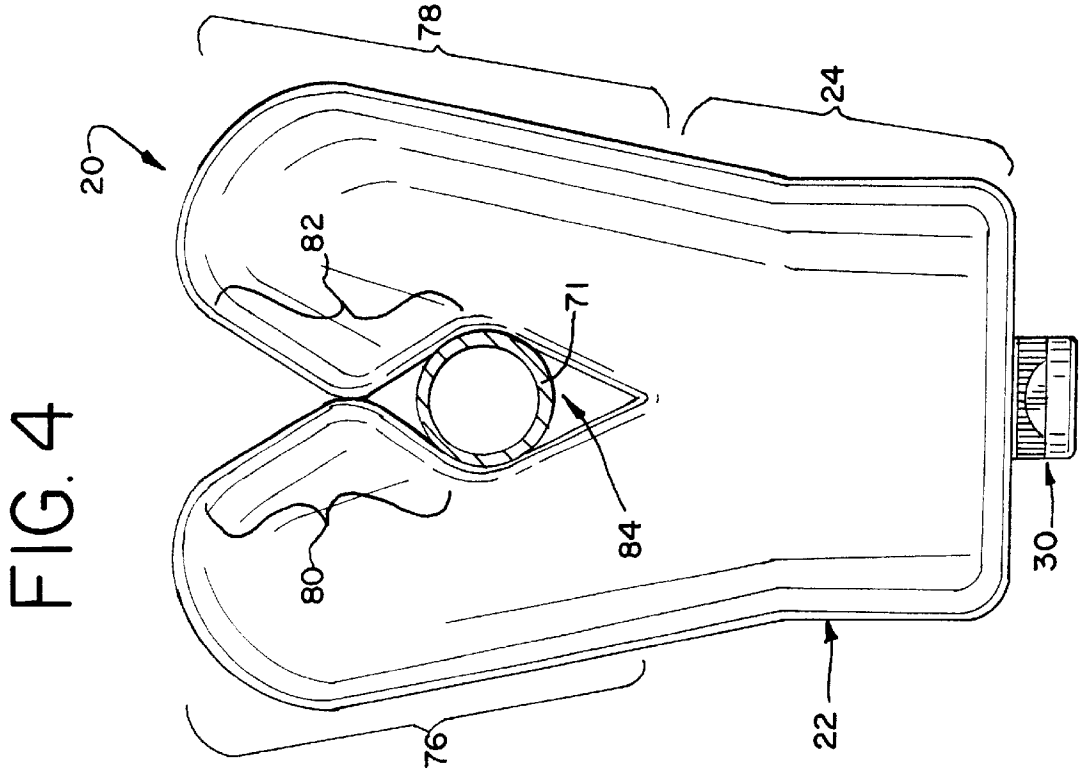

FIG. 4

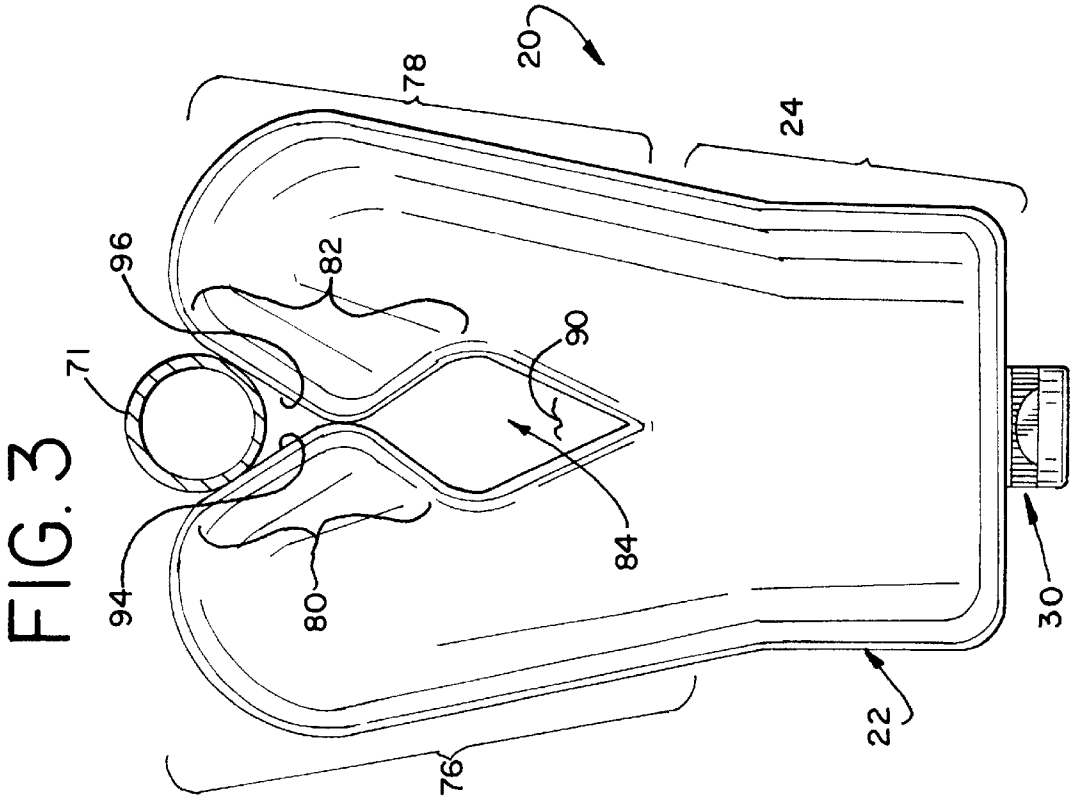

FIG. 3

270 || @HighEarthOrbit_ linktr.ee/Grider2

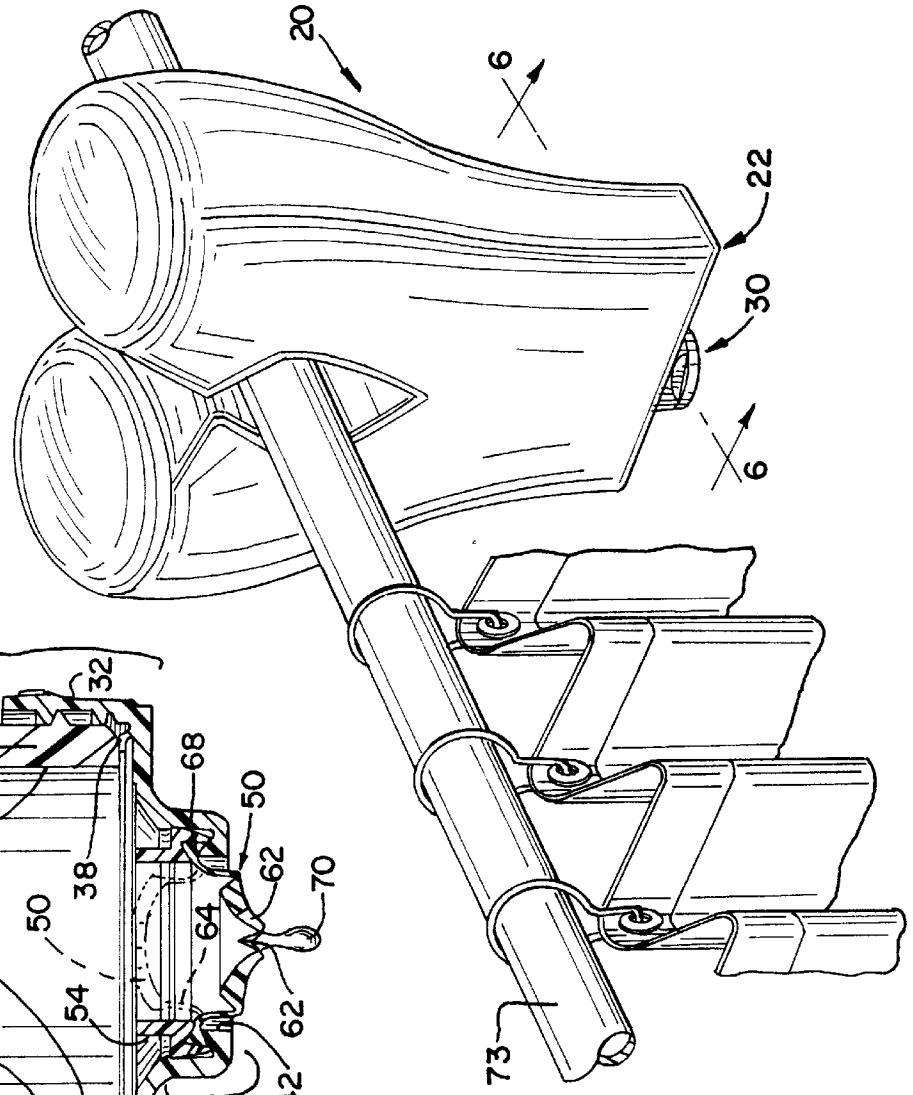

FIG. 5

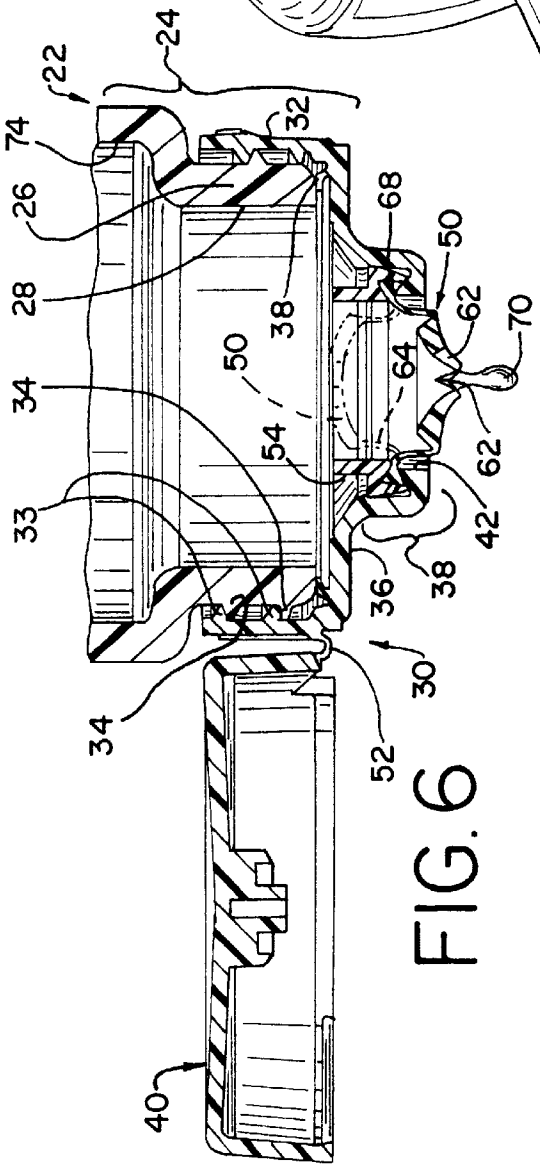

FIG. 6

271 || @HighEarthOrbit_ linktr.ee/Grider2

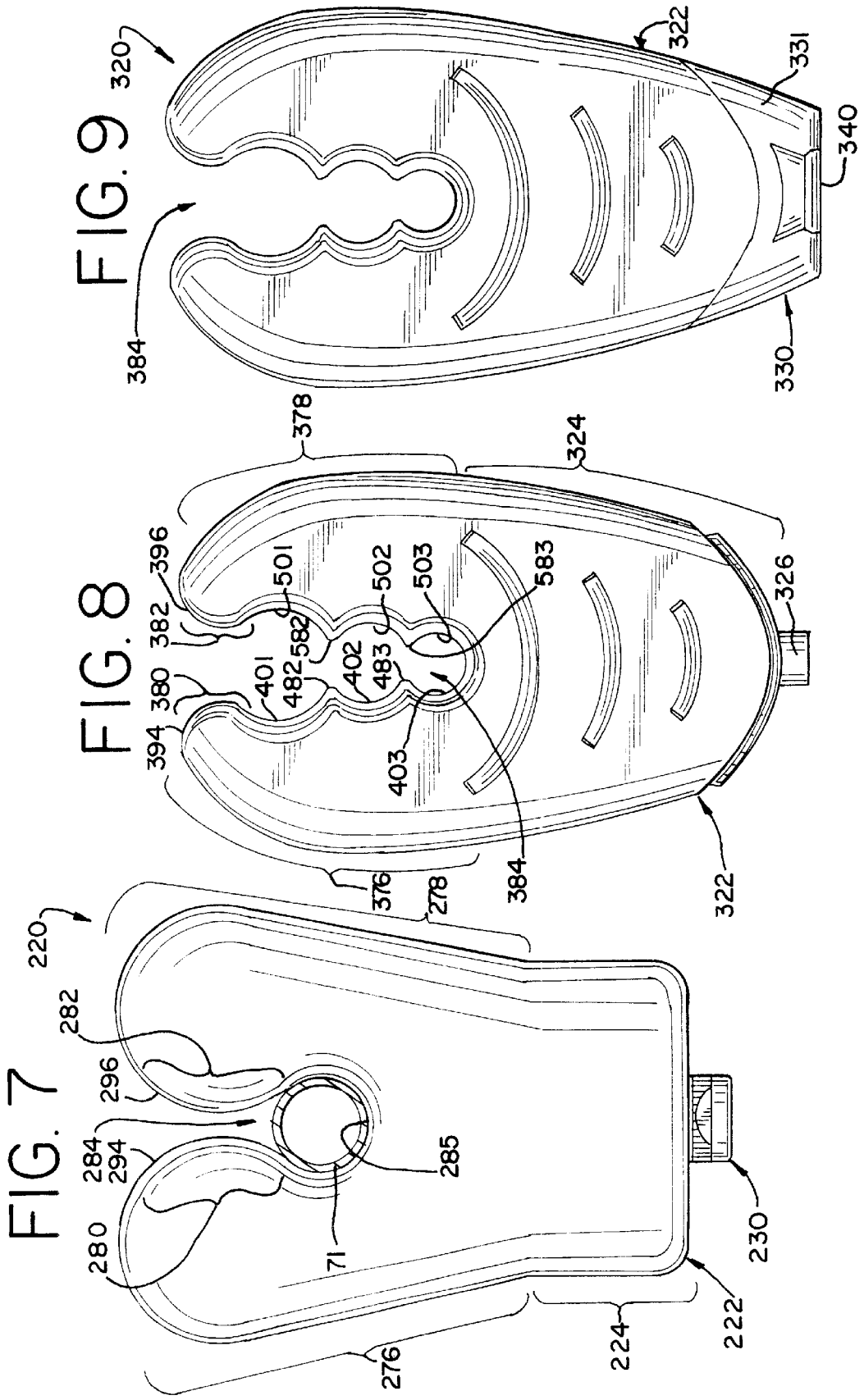

272 || @HighEarthOrbit_ linktr.ee/Grider2

AIR AND SPACE VEHICLE PROPULSION SYSTEM

BACKGROUND OF THE INVENTION

This invention relates to modes of transportation, and is especially directed to manned and unmanned aerospace (i.e., air and/or space) vehicles. The invention is specifically directed to a drive system that can be employed in such vehicles.

A technique for suspending a communications platform (i.e., a communications mirror) at a low altitude (100 to 200 kilometers) is described in U.S. Pat. No. 4,253,190 to Csonka. There, the mirror is kept aloft above the atmosphere by pressure of electromagnetic radiation that is beamed up at it from a ground antenna. A similar technique for suspending a platform at a high altitude in the atmosphere is described in U.S. Pat. No. 4,704,732 to Csonka. In that arrangement, the platform is again kept aloft by radiation from a ground station. However, in this case, the energy received by the platform is transferred to air molecules that impinge on it, and these momentum transferred to these molecules (which move downwards) provide lifting force to the platform. The temperature density of the platform is controlled, so that the net direction of force is in the desired direction. The explanation for the principles that these two patents rely on, and the supporting engineering mathematics, are contained in these two patents, and their disclosure is incorporated herein by reference.

On the other hand, no one has proposed a system for manned or unmanned aerospace flight that relies on radiation pressure, nor has anyone suggested using an on-board electromagnetic source for propulsion, either by radiation pressure or by molecular momentum transfer. Currently, chemical-based rocket drives are employed for manned vehicles, unmanned space vehicles, and orbiting craft. There is a need for a clean and economical way to travel both in air and in space, which does not rely on chemically generated thrust.

Objects and Summary of the Invention

Accordingly, it is an object of the invention to provide an effective and efficient means for transportation, in space or in the atmosphere, which avoids the drawbacks of the prior art.

It is another object to provide a mode of transportation that can be modified for use underwater.

It is a further object to provide a transportation system that employs microwave circuits that can be located in the skin or hull of the aerospace craft, and which relies on radiant pressure and particle momentum transfer principles.

According to an aspect of this invention, an aerospace vehicle drive system is provided as a part of a vessel. The vessel hull is or may be formed of multiple layers, with a void or inter-layer space formed between an inner layer and an outer layer (or group of layers). Radiators of electromagnetic power, i.e. dipole antennas, are situated in the inter-layer space. These may have reflectors formed in a part of the inner surface of this space, with the dipoles situated at the reflector. A power source, i.e., a source of electromagnetic wave energy, such as microwaves, inside the vessel is coupled to these radiators. A control mechanism, such as a control console, which may be computerized, controls the application of power to the radiators to control the direction of the net force and the amount of force that results from the drive. There may be a ring of radiators around the rim of the vessel as well.

In a preferred mode, the hull of the vessel is configured as a series of segments, and there are radiators in each of the segments. In this way the power may be controlled segment by segment. The outer layer may have a grooved inner surface, and the outer layer may be formed of either beryllium or titanium. Again, in a preferred embodiment, the vessel hull may have upper and lower hemispheres, with each hemisphere being divided into segments, i.e., thirty-six segments each having an extent of about ten degrees of arc. The outer hull may be of Teflon over a beryllium or titanium alloy. A transistion metal may be used at the grooved surface (i.e., Cr_x Mn_x antimonide, or another energy conducting material.

The propulsion system of this invention provides a clean, economical way for travel in the atmosphere or in space, and if modified can be used for marine use (surface or underwater). In each case, microwaves or other electromagnetic energy creates radiant pressure and results in particle momentum from the grooved layer of the hull.

There may be laser or maser weaponry provided in the vessel, which fire through windows provided on the rim between the upper and lower hemispheres.

The above and many other objects, features, and advantages of this invention will become apparent to persons skilled in the art from the ensuing description of a preferred embodiment, which should be considered in connection with the accompanying Drawing.

BRIEF DESCRIPTION OF THE DRAWING

FIG. **1** is a plan view of a vessel hull, illustrating segments, according to one embodiment of this invention.

FIG. **2** is a schematic view of a microwave source and control circuit.

FIG. **3** is a side elevation of the vessel hull of this embodiment.

FIG. **3A** shows a section of the hull or skin of the vessel.

FIGS. **3B** and **3C** illustrate an edge of on of the segments of this embodiment.

FIG. **4** is a sectional elevation showing the application of power to radiators in the vessel hull.

FIG. **5** is a schematic view of a control arrangement comprised of a number of consoles.

FIG. **6** an optical transducer for the vessel of this embodiment.

FIG. **7** is a sectional view of a weapons optical window of this embodiment.

FIG. **8** is a sectional view of a portion of the hull of this embodiment.

DETAILED DESCRIPTION OF A PREFERRED EMBODIMENTS

With reference to the Drawing, and initially to FIG. **1** thereof, a top plan view of the vessel or craft **10** shows the outer hull **12** and edges **14**. The vessel is of a round, i.e., circular profile, and is configured into segments **16**, here thirty-six segments each of ten degrees of arc.

FIG. **2** shows a power unit **20** of the type that is or may be used to power this vessel. Here, a power supply **22** supplies a maser circuit **24**, which in turn provides microwave power to a maser device **26**. A control input to the maser circuit **22** permits control from a control panel, to be discussed later. There are a number of these units **20** provided for each of the segments **16**.

FIG. **3** is an elevational view of the hull **12**, showing an upper hemisphere **28** and a lower hemisphere **30**, each

273 || @HighEarthOrbit_ linktr.ee/Grider2

having thirty six segments, as mentioned earlier. Each of these segments has a number of radiators, i.e., dipoles, and the hull is multi-layered.

FIG. **3**A is a section of the hull skin or wall, and has a inner layer or group of layers **34** and an outer layer or group of layers **35**, and these define between them an inter-layer gap or space **36**. There are dipole radiators located in this space **36** for the purpose of microwave radiant emission to cause particle momentum, and resulting motive force. As shown in FIG. **3**B, at an outer edge of each segment **16** there is a flange **38**, and on this flange is situated one or more dipole antennas or radiators **40**, which may be on a post above a spheric reflector **42**.

Within the hull, there are a number of these dipoles **40** situated on similar reflectors **42** on the inner layer **34** facing the outer layer **35** across the gap or space **36**. Inside the ship or vessel **10** there are respective microwave generators, i.e., power units **20**, each contained in a respecive pod in this embodiment. Ceramic magnetic conduits **44** carry microwaves to the dipole radiators **40** which are situated in reflectors **42** in the hull skin (see FIG. **3**B). For simplicity, only two of these are shown here. Also shown here, along the plane between the upper and lower hemispheres, there are or may be a plurality of traveling-wave wave guides **46** connecting an optical pump (discussed later) to optical windows **48** along the edge **14** of the hull.

A control console arrangement is shown schematically in FIG. **5**, comprised of a number of console boards, and joined to one another by signal and power buses. Here, a first console **101** contains modules for pilot communication, flight control, weapons triggering and targeting, systems monitoring and instrumentation, and life support monitoring. This console **101** has an associated joystick control **102** for pilot control of vehicle movement and of weaponry. Second and third comm interface consoles **103**, here shown together, control communications and include modules for impedance matching, microwave transmission, compensation to correct error, and microwave transmission. A main communications console **104** is configured for connection with all exterior sites. A main computer console **105** coordinates all functions and monitors coordinates on board, conducts system checks and diagnostics, and connects to the joystick **102**. This also controls stealth functions, using the microwave director antenna. Stealth may be active or passive. The main computer supplies control signals also along a signal bus **106** to the maser circuits **22** in each of the upper and lower segments. The main computer module **105** also connects to a life support systems console **107**. At a weapons maser control console **108**, there is a maser impedance matching module, an error correction module, a mixer control module, and a maser mirror control module, for stepmotor control, to be discussed shortly. Another module **109** has an RF control module, a systems check module, and RF generator module, and an RF output module. This provides RF signal to a marconi omnidirectional antenna on the bottom of the hull **12**. A similar module **110** provides RF signal to a marconi omnidirectional antenna on the top of the hull.

FIG. **6** illustrates the optical transducer that provides and directs optical energy to the traveling-wave wave guides **46** that carry it to the optical windows **48**. A drum or cylindrical housing **50** holds respective optical connectors **51** for each of the guides **46**. Each connector is at a predetermined angle in respect to the center of the housing **50**. Stepmotor power lines **52** connect between a stepper motor **53** and the console **108**, and the stepper motor controllably rotates an optical reflector or mirror **54** that is positioned on a mount **55** that is fitted onto the shaft of the motor **53**. A maser **56** or other source of energized particles or photons is or may be positioned on the axis of the stepper motor **53**, and the mirror steers the optical axis of the maser **56** to align with one or another of the travelling wave waveguides **46**.

The outer or distal end of the waveguides **46** is shown in detail in FIG. **7**, where an end termination **58**, i.e., an optical pump and focussing device, emits energy through the optical window **48** at the rim **14** of the vessel. The upper and lower hemispheres **28**, **30** of the hull **12** are shown here also.

Details of the structure of the hull **12** are shown in FIG. **8**. Here, one of the radiators **40** is shown in a portion of the hull inner layer **34**, situated in an associated concave reflector **42** formed in the layer **34**. The outer layer **35** is situated across the inter-layer space **36** from the layer **34**. Here, the facing (lower) side of the outer layer **35** is formed of a conductive material having grooves or teeth **60**. These may be formed of beryllium or titanium, and exterior of these grooves or teeth, the remaining layer portion **62** may be the same or a different material, such as Teflon. Electromagnetic energy, i.e., microwaves, become trapped in the grooves **60** or between the teeth and the trapped energy creates heat, that in turn creates particle momentum for propulsion purposes, as discussed above and in connection with U.S. Pat. No. 4,704,732. The inner hull layer **34** may have removeable panels to provide access for maintenance, except that the distance from radio emitter to the surface **60** is reduced to a few inches.

The hull **12** of the vessel or craft **10** may be a titanium alloy of the type commonly used by government space agencies and contractors, or may be a pure beryllium. The inner hull layer may be a titanium alloy. In the weapons system, the optical windows **48** may be a crystal composite, with outer layer of sapphire and inner center of ruby. The wave guide **46** may be a tunable wave guide.

The control consoles, as discussed above with reference to FIG. **5**, constitute the interface for the pilot. These may provide the pilot with all needed data and controls through buslines to the computer. Panel controls are mounted into the consoles so as to be accessable to the pilot. The omnidirectional marconis are for communications and sensors (telemetry). A main gyroscope connects with the pilot's gyroscope and gives positional data used in navigation and (optionally) for radio astronomy. The consoles also monitor life support functions, and may connect with instrumentation for checking atmosphere, humidity, and temperature. The consoles also employ a joystick control for the pilot to control direction and amount of levitation and thrust, and for control of weaponry. The weapons can be pre-tested at a low energy level, i.e., by using the maser **56** at a low energy level, for flight check and simulations, and in connection with director stealth functions.

In a preferred mode, the dipoles **40** may have an impedance of 300 ohms. A transistion metal alloy, such as chromium-manganese-antimony may be used in the vehicle hull **12**, with the amount of antimony being selected to change the transistion point at which is starts to create a magnetic flux. Common ceramic permanent magnet materials may be used for microwave applications in connection with this invention, such as barium ferrite (oriented), strontium ferrite, yttrium iron garnet, yttrium aluminum, gadolinium garnet, dysprosium (in ferrite). Beryllium aluminum (i.e., 33% aluminum) may be used as a beryllium alloy, as it has a good tensile strength and a high conductivity and high heat capacity, as well as being non-magnetic. Beryllium oxide, which may provide surface insulation, is a good conductor of heat.

274 || @HighEarthOrbit_ linktr.ee/Grider2

The vessel according to this invention provides a clean, economical means for transportation in air or in space, and may be adapted for travel in or under water. The pilot or operator, one inside the vessel, can power up the systems, initiate pre-flight checks, and then use the joystick to engage and initiate flight.

While the invention has been described in reference to a preferred embodiment, it should be understood that the invention is not limited to that precise embodiment. Rather, many modifications and variations will present themselves to those skilled in the art without departing from the scope and spirit of the invention, as defined in the appended claims.

I claim:

1. An aerospace vehicle drive, comprising a hull, said hull having a plurality of layers defining an inter-layer space between two of said layers; a plurality of electromagnetic emitters situated in said inter-layer space; power means within said hull providing electromagnetic energy; and control means for controlling application of said electromagnetic energy to the respective emitters and thus control the net amount and direction of force provided by said drive.

2. The aerospace vehicle drive according to claim **1**, wherein said emitters comprise dipole emitters.

3. The aerospace vehicle drive according to claim **1**, wherein said hull is configured as a plurality of segments, with each segment having one or more of said emitters.

4. An aerospace vehicle drive comprising a hull, said hull having a plurality of layers defining an inter-layer space between two of said layers; a plurality of electromagnetic emitters situated in said inter-layer space; power means within said hull providing electromagnetic energy; and control means for controlling application of said electromagnetic energy to the respective emitters and thus control the net amount and direction of force provided by said drive, wherein an outer one of said layers has a grooved inner surface.

5. The aerospace vehicle drive according to claim **4**, wherein said outer layer is formed of beryllium or titanium.

6. An aerospace vehicle and drive mechanism therefore, comprising a hull having upper and lower hemispheres, each hemisphere being divided into a plurality of segments; a plurality of electromagnetic emitters distributed over the hull such that each of said segments has one or more of said emitters; a source of electromagnetic energy within the hull, and supplying electromagnetic energy to said emitters; and control means for controlling application of said electromagnetic energy to the respective emitters and thus control to the net amount and direction of force provided by said drive.

7. The aerospace vehicle and drive mechanism therefor, according to claim **6**, wherein said hull is in the form of a plurality of layers defining an inter-layer space between two of said layers, and wherein at least some of said emitters are situated in said inter-layer space.

8. An aerospace vehicle and drive mechanism therefore, comprising a hull having upper and lower hemispheres, each hemisphere being divided into a plurality of segments; a plurality of electromagnetic emitters distributed over the hull such that each of said segments has one or more of said emitters: a source of electromagnetic energy within the hull, and supplying electromagnetic energy to said emitters; and control means for controlling application of said electromagnetic energy to the respective emitters and thus control the net amount and direction of force provided by said drive; wherein said hull is in the form of a plurality of layers defining an inter-layer space between two of said layers, and wherein at least some of said emitters are situated in said inter-layer space; and wherein an outer layer of said hull has a grooved inner surface. each of said segments has one or more of said emitters; a source of electromagnetic energy within the hull, and supplying electromagnetic energy to said emitters; and control means for controlling application of said electromagnetic energy to the respective emitters and thus control the net amount and direction of force provided by said drive.

* * * * *

275 || @HighEarthOrbit_ linktr.ee/Grider2

UNITED STATES PATENT AND TRADEMARK OFFICE

CERTIFICATE OF CORRECTION

PATENT NO. : 6,179,250 B1
DATED : January 30, 2001
INVENTOR(S) : Laurence Waters

It is certified that error appears in the above-identified patent and that said Letters Patent is hereby corrected as shown below:

Title page,
The title page, showing the illustrative figure should be deleted and sustitute therefore the attached title page.

Drawings,
Replace the three (3) sheets of drawing figures with the attached four (4) sheets containing Figs. 1 to 8.

Column 6,
Lines 31-37, after "inner surface.", all text should be deleted.

Signed and Sealed this

Twenty-seventh Day of November, 2001

Attest:

Nicholas P. Godici

NICHOLAS P. GODICI
Acting Director of the United States Patent and Trademark Office

Attesting Officer

276 || @HighEarthOrbit_ linktr.ee/Grider2

(12) **United States Patent**
Waters

(10) **Patent No.: US 6,179,250 B1**
(45) **Date of Patent: Jan. 30, 2001**

(54) **AIR AND SPACE VEHICLE PROPULSION SYSTEM**

(76) Inventor: **Laurence Waters**, 541 Stone St., Watertown, NY (US) 13601

(*) Notice: Under 35 U.S.C. 154(b), the term of this patent shall be extended for 0 days.

(21) Appl. No.: **09/247,961**

(22) Filed: **Feb. 10, 1999**

(51) **Int. Cl.**[7] **B64C 27/00**
(52) **U.S. Cl.** **244/62**; 244/172
(58) **Field of Search** ..... 244/62, 53 R, 244/172, 158 R

(56) **References Cited**

U.S. PATENT DOCUMENTS

3,095,163	*	6/1963	Hill	244/62
3,150,363		9/1964	Finvold	343/59 A
3,151,325		9/1964	Kompfuer	343/100 AM
3,169,245		2/1965	Cutler	343/100 ST
3,373,430		3/1968	Croswell et al.	343/773
3,495,791	*	2/1970	Drell et al.	244/172
3,504,868	*	4/1970	Engelberger	244/172
3,656,166		4/1972	Klopach et al.	343/773
3,662,554	*	5/1972	De Broqueville	244/62
4,253,190		2/1981	Czonka	244/62
4,663,932	*	5/1987	Cox	60/200.1
4,704,732		11/1987	Czonka	244/62
5,142,861	*	9/1992	Schlicher et al.	60/203.1
5,818,649	*	10/1998	Anderson	359/726

* cited by examiner

Primary Examiner—J. Woodrow Eldred
(74) *Attorney, Agent, or Firm*—Bernhard P. Molldrem, Jr.

(57) **ABSTRACT**

A propulsion system for aerospace vehicles employs dipole radiators in an interlayer space between outer and inner layers of the vehicle hull. Microwaves are applied, via a control console, to the radiators. The hull may be configured as sectors, and energy may be applied sector by sector to control levitation and propulsion. The outer hull layer can have a grooved inner surface, and may be formed of a titanium or beryllium alloy.

8 Claims, 4 Drawing Sheets

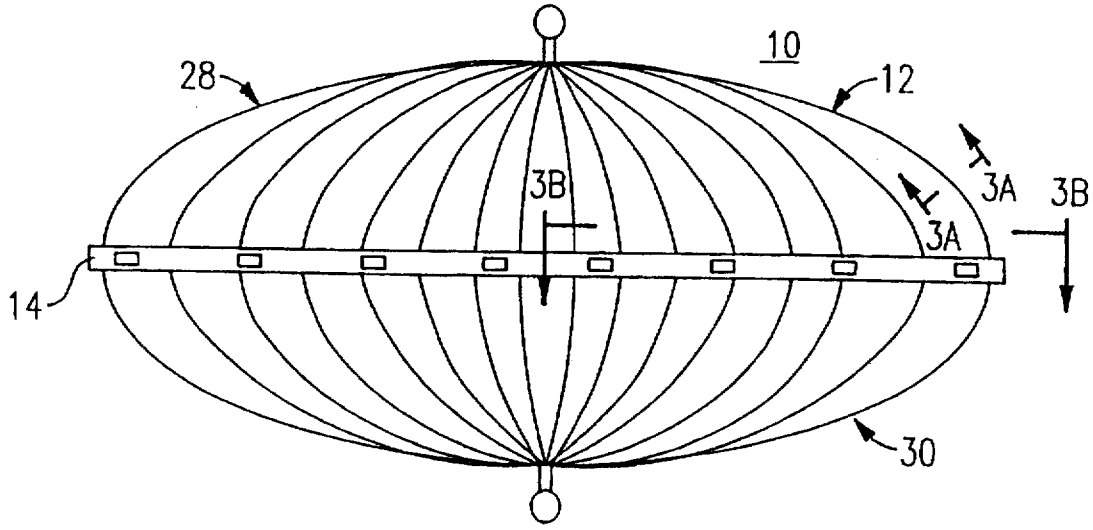

277 || @HighEarthOrbit_ linktr.ee/Grider2

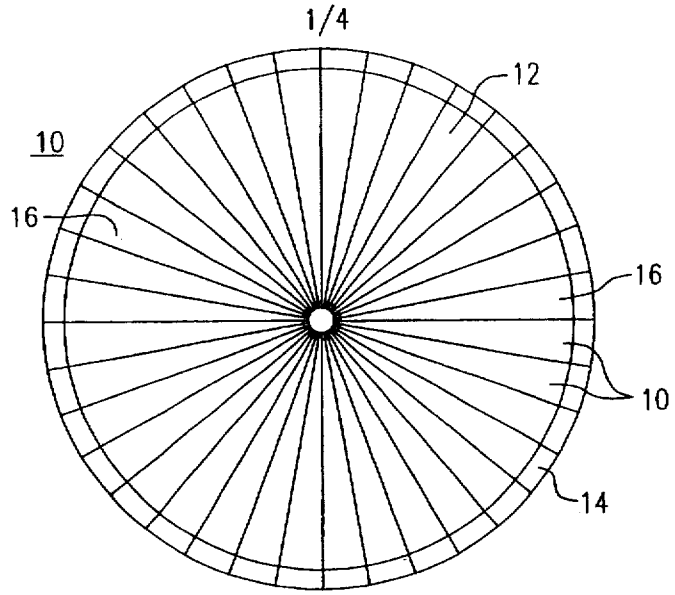

FIG.1

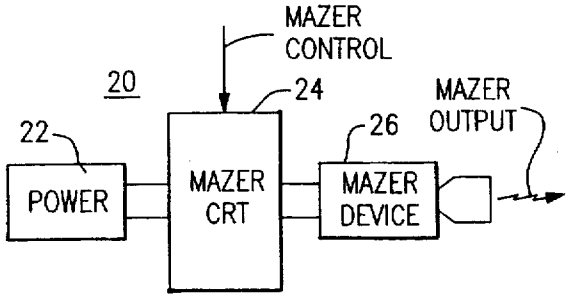

FIG.2

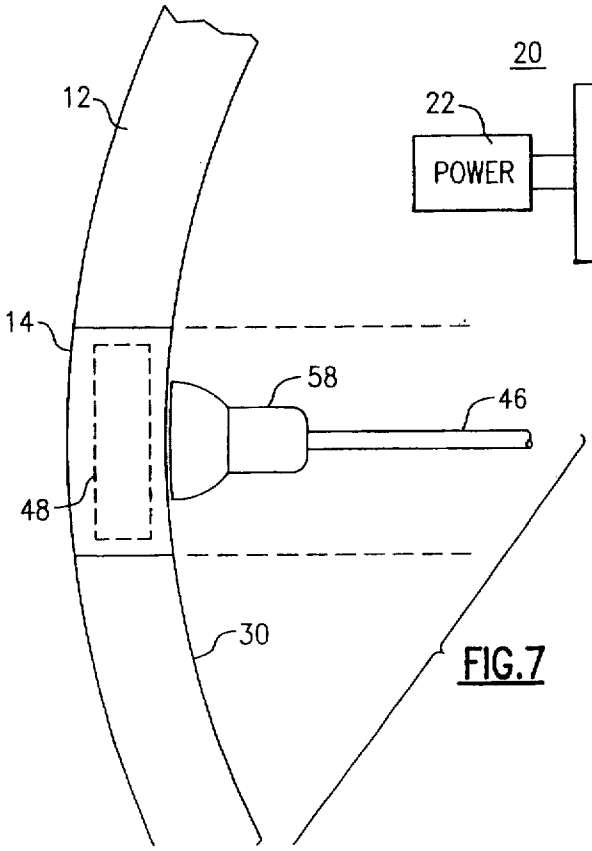

FIG.7

278 || @HighEarthOrbit_ linktr.ee/Grider2

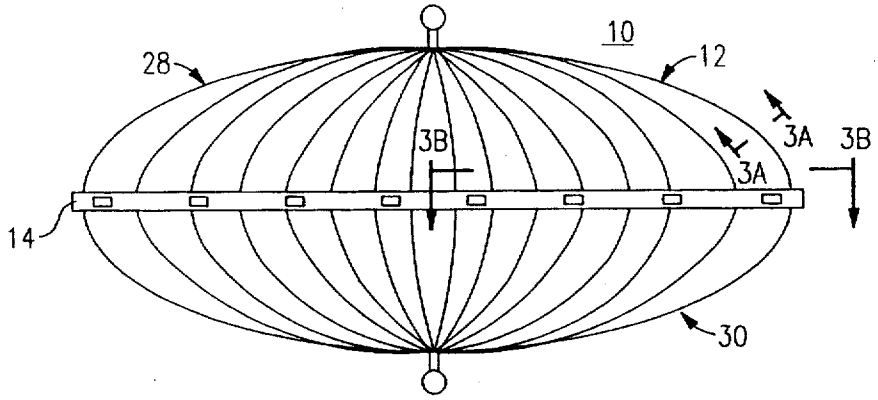

FIG.3

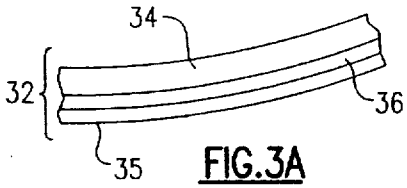

FIG.3A

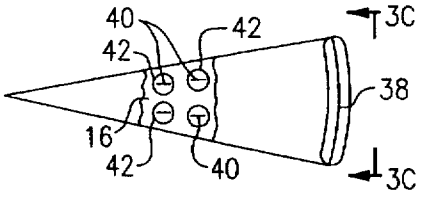

FIG.3B

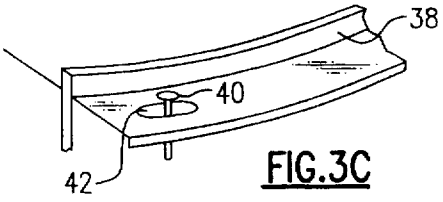

FIG.3C

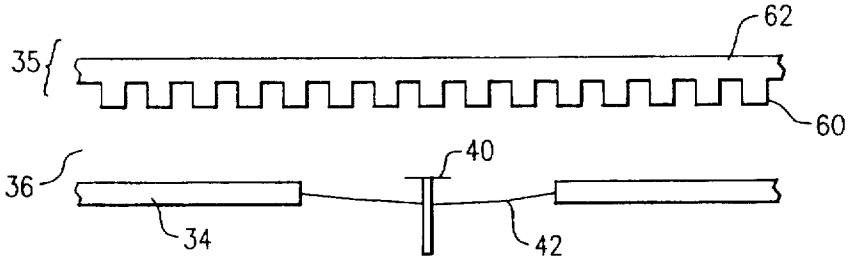

FIG.8

279 || @HighEarthOrbit_ linktr.ee/Grider2

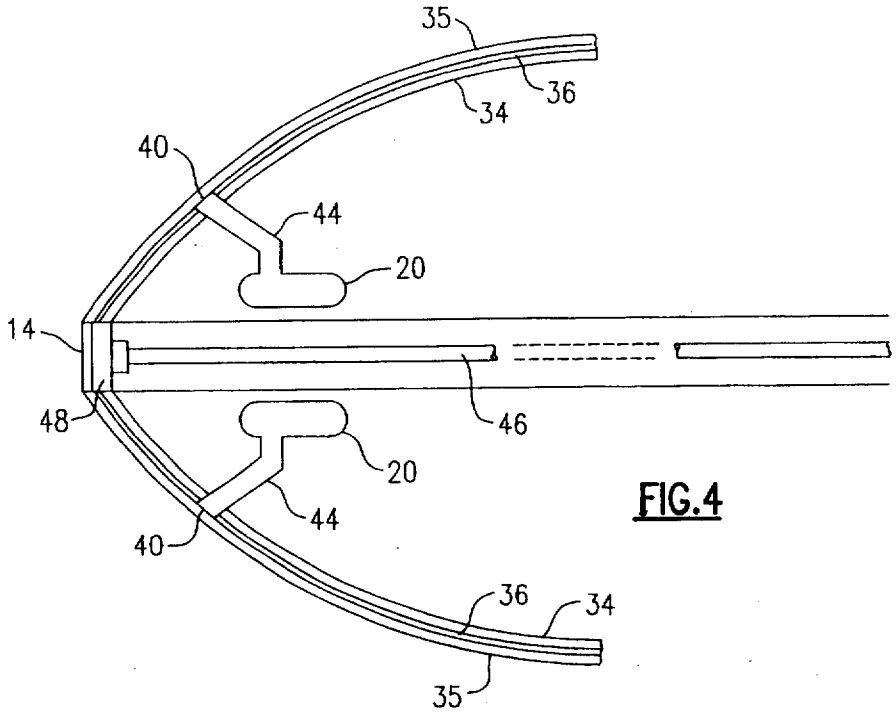

FIG.4

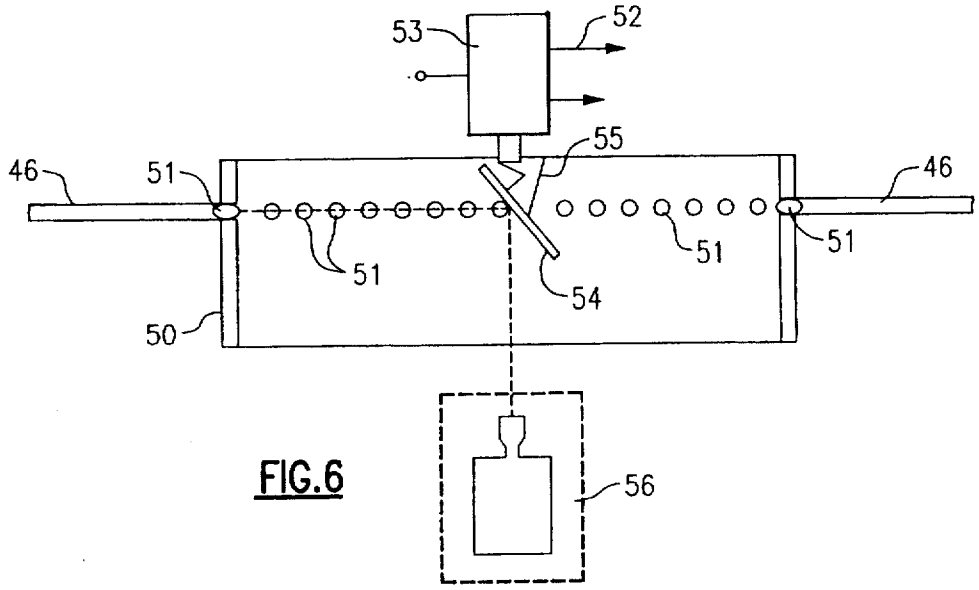

FIG.6

280 || @HighEarthOrbit_ linktr.ee/Grider2

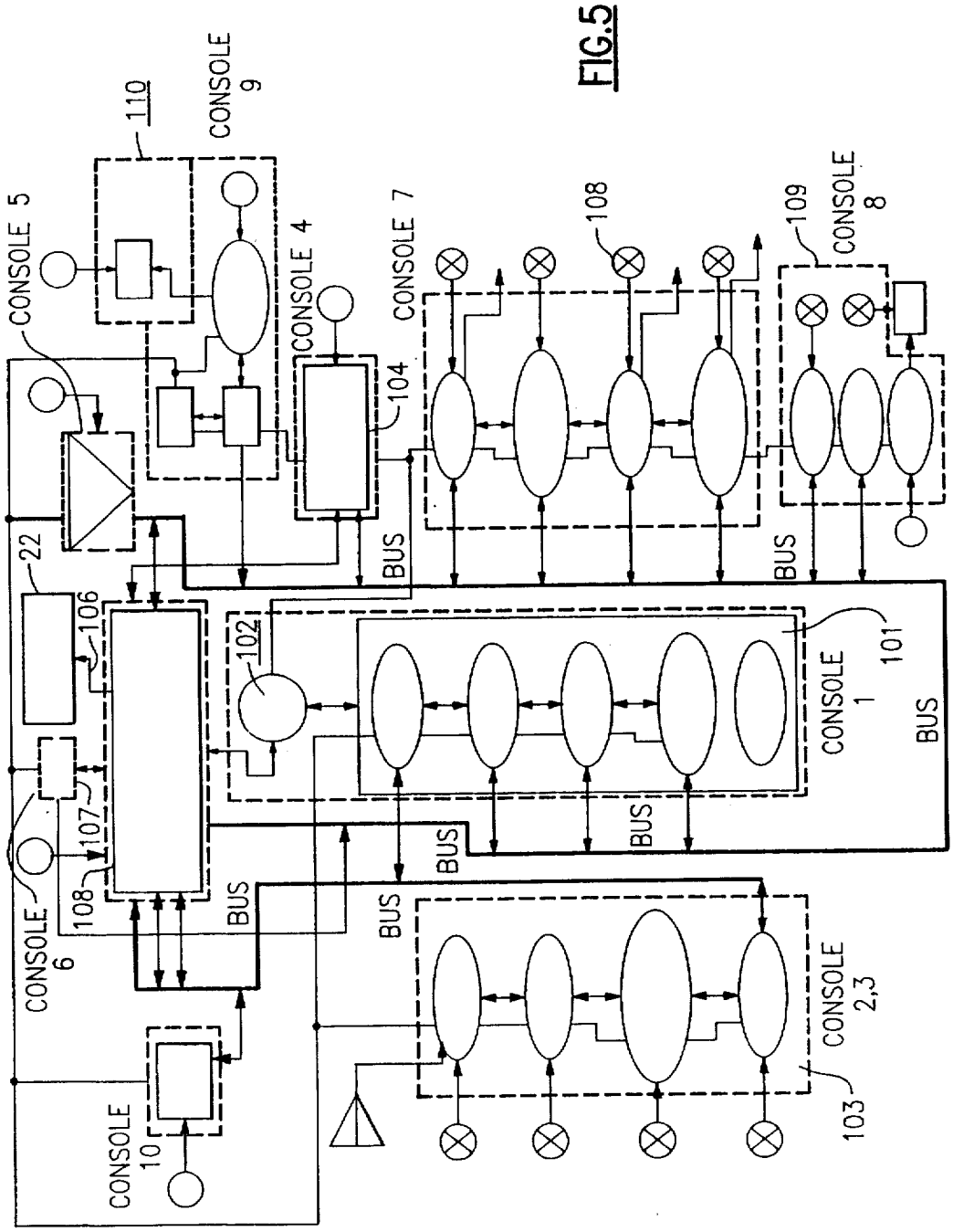

FIG.5

281 | | @HighEarthOrbit_ linktr.ee/Grider2

UNITED STATES PATENT AND TRADEMARK OFFICE

CERTIFICATE OF CORRECTION

PATENT NO. : 6,179,250 B1
DATED : January 30, 2001
INVENTOR(S) : Laurence Waters

It is certified that error appears in the above-identified patent and that said Letters Patent is hereby corrected as shown below:

See Drawings.
See Claim 8.

(12) **United States Patent**
Waters

(10) **Patent No.: US 6,179,250 B1**
(45) **Date of Patent: Jan. 30, 2001**

(54) **AIR AND SPACE VEHICLE PROPULSION SYSTEM**

(76) Inventor: Laurence Waters, 541 Stone St., Watertown, NY (US) 13601

(*) Notice: Under 35 U.S.C. 154(b), the term of this patent shall be extended for 0 days.

(21) Appl. No.: 09/247,961

(22) Filed: Feb. 10, 1999

(51) Int. Cl.[7] B64C 27/00

(52) U.S. Cl. 244/62; 244/172

(58) Field of Search ..... 244/62, 53 R, 244/172, 158 R

(56) References Cited

U.S. PATENT DOCUMENTS

3,095,163 *	6/1963	Hill	244/62
3,150,363	9/1964	Pirwold	343/59 A
3,151,325	9/1964	Kempfner	343/100 AM
3,169,245	2/1965	Cutler	343/100 ST
3,373,430	3/1968	Crowell et al.	343/773
3,495,781 *	2/1970	Drell et al.	244/172
3,504,868 *	4/1970	Engelberger	244/172
3,656,166	4/1972	Klapach et al.	343/773
3,662,354 *	5/1972	De Rosquevalle	244/62
4,253,189	2/1981	Czenka	244/62
4,663,932 *	5/1987	Cox	60/200.1
4,704,732	11/1987	Czenka	244/62
5,142,861 *	9/1992	Schlicher et al.	60/203.1
5,818,649 *	10/1998	Anderson	359/726

* cited by examiner

Primary Examiner—J. Woodrow Eldred
(74) *Attorney, Agent, or Firm*—Bernhard P. Molldrem, Jr.

(57) ABSTRACT

A propulsion system for aerospace vehicles employs dipole radiators in an interlayer space between outer and inner layers of the vehicle hull. Microwaves are applied, via a control console, to the radiators. The hull may be configured as sectors, and energy may be applied sector by sector to control levitation and propulsion. The outer hull layer can have a grooved inner surface, and may be formed of a titanium or beryllium alloy.

8 Claims, 4 Drawing Sheets

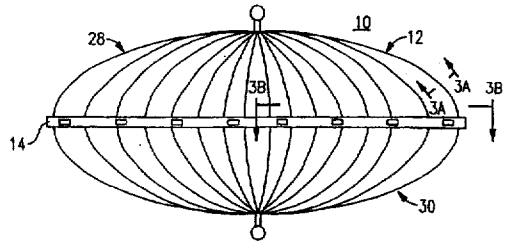

Signed and Sealed this

Fifth Day of February, 2002

Attest:

Attesting Officer

JAMES E. ROGAN
Director of the United States Patent and Trademark Office

282 | | @HighEarthOrbit_ linktr.ee/Grider2

(12) **United States Patent**
Waters

(10) **Patent No.: US 6,179,250 B1**
(45) **Date of Patent: Jan. 30, 2001**

(54) **AIR AND SPACE VEHICLE PROPULSION SYSTEM**

(76) Inventor: **Laurence Waters**, 541 Stone St., Watertown, NY (US) 13601

(*) Notice: Under 35 U.S.C. 154(b), the term of this patent shall be extended for 0 days.

(21) Appl. No.: **09/247,961**

(22) Filed: **Feb. 10, 1999**

(51) **Int. Cl.**[7] **B64C 27/00**
(52) **U.S. Cl.** **244/62**; 244/172
(58) **Field of Search** ..... 244/62, 53 R, 244/172, 158 R

(56) **References Cited**

U.S. PATENT DOCUMENTS

3,095,163	*	6/1963	Hill	244/62
3,150,363		9/1964	Finvold	343/59 A
3,151,325		9/1964	Kompfuer	343/100 AM
3,169,245		2/1965	Cutler	343/100 ST
3,373,430		3/1968	Croswell et al.	343/773
3,495,791	*	2/1970	Drell et al.	244/172
3,504,868	*	4/1970	Engelberger	244/172
3,656,166		4/1972	Klopach et al.	343/773
3,662,554	*	5/1972	De Broqueville	244/62
4,253,190		2/1981	Czonka	244/62
4,663,932	*	5/1987	Cox	60/200.1
4,704,732		11/1987	Czonka	244/62
5,142,861	*	9/1992	Schlicher et al.	60/203.1
5,818,649	*	10/1998	Anderson	359/726

* cited by examiner

Primary Examiner—J. Woodrow Eldred
(74) *Attorney, Agent, or Firm*—Bernhard P. Molldrem, Jr.

(57) **ABSTRACT**

A propulsion system for aerospace vehicles employs dipole radiators in an interlayer space between outer and inner layers of the vehicle hull. Microwaves are applied, via a control console, to the radiators. The hull may be configured as sectors, and energy may be applied sector by sector to control levitation and propulsion. The outer hull layer can have a grooved inner surface, and may be formed of a titanium or beryllium alloy.

8 Claims, 4 Drawing Sheets

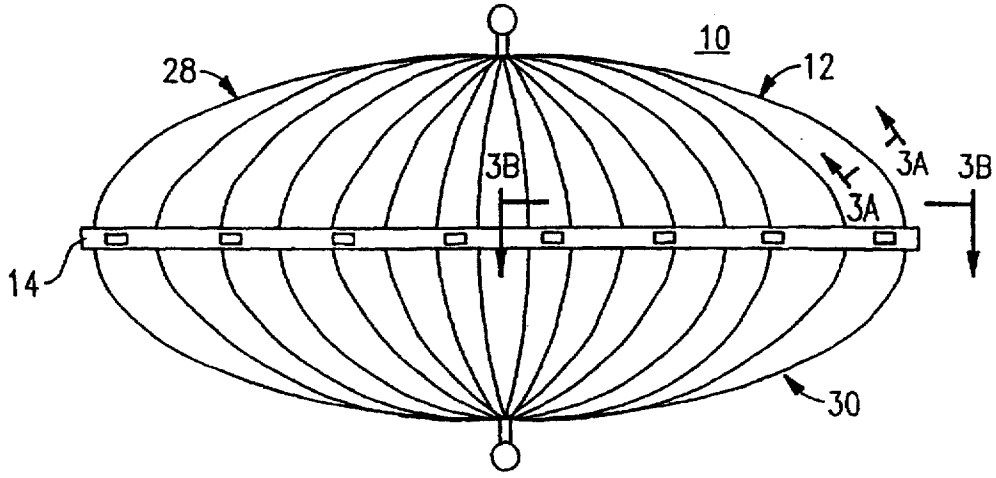

283 || @HighEarthOrbit_ linktr.ee/Grider2

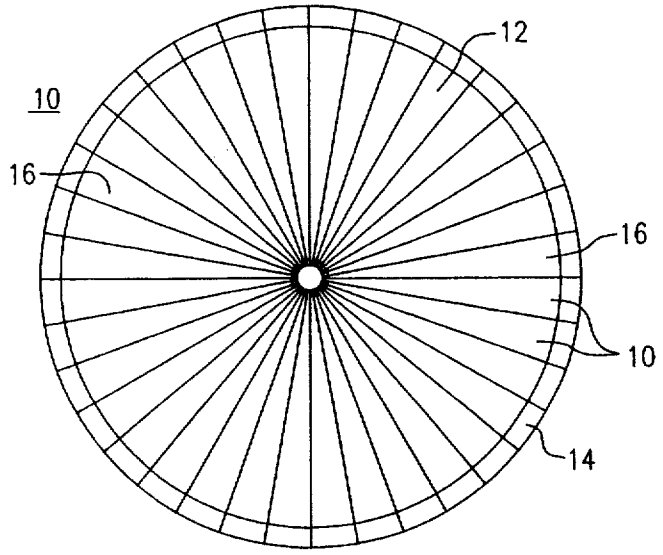

FIG.1

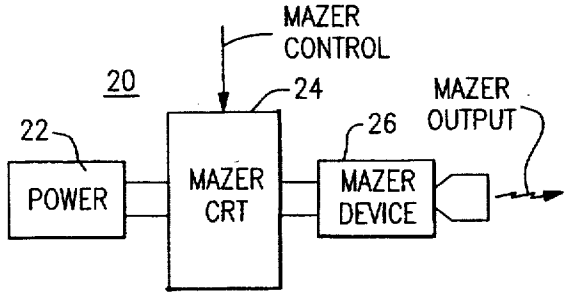

FIG.2

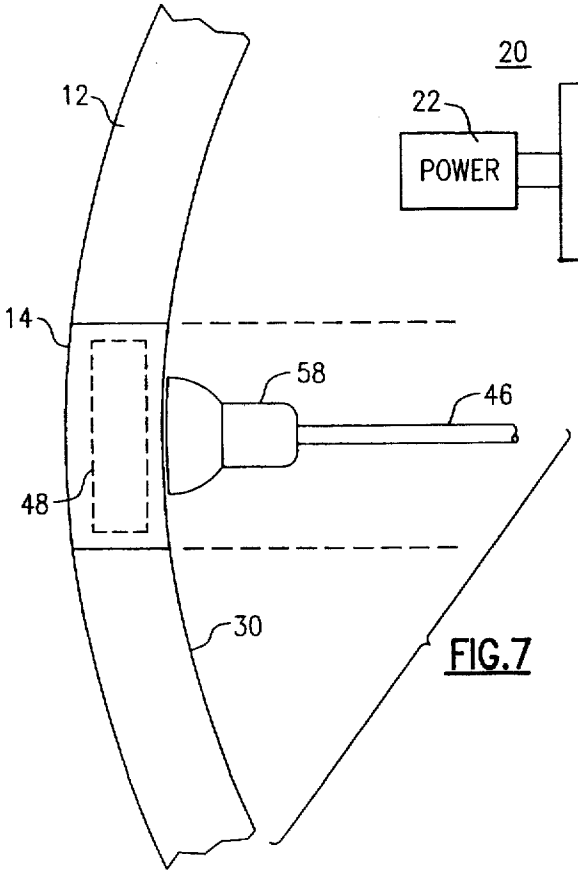

FIG.7

284 || @HighEarthOrbit_ linktr.ee/Grider2

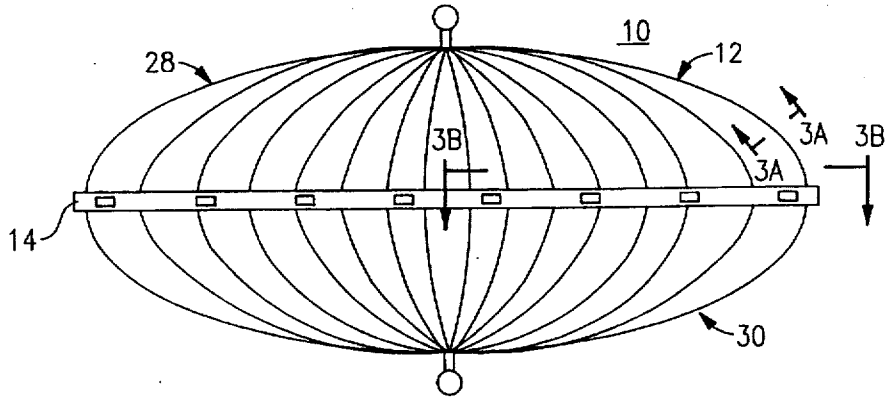

FIG.3

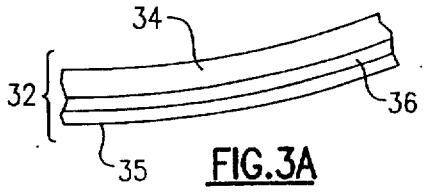

FIG.3A

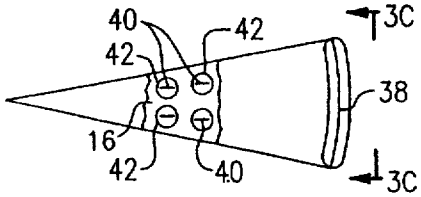

FIG.3B

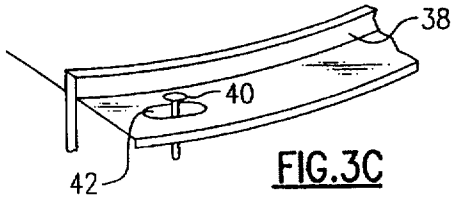

FIG.3C

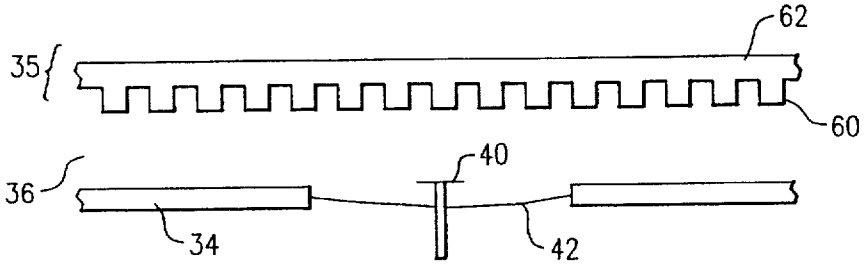

FIG.8

285 || @HighEarthOrbit_ linktr.ee/Grider2

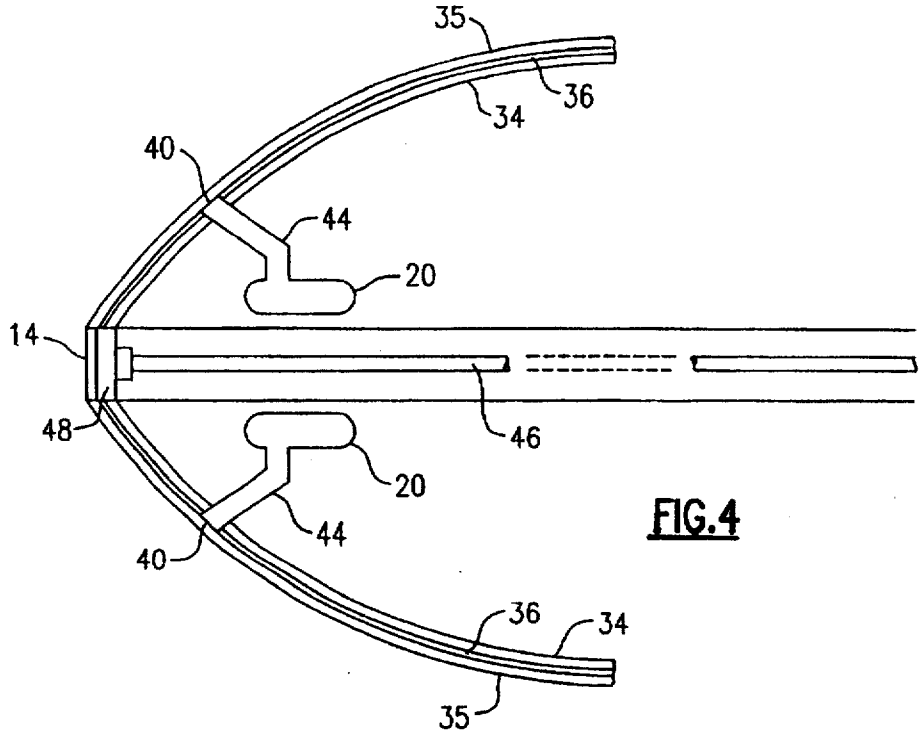

FIG.4

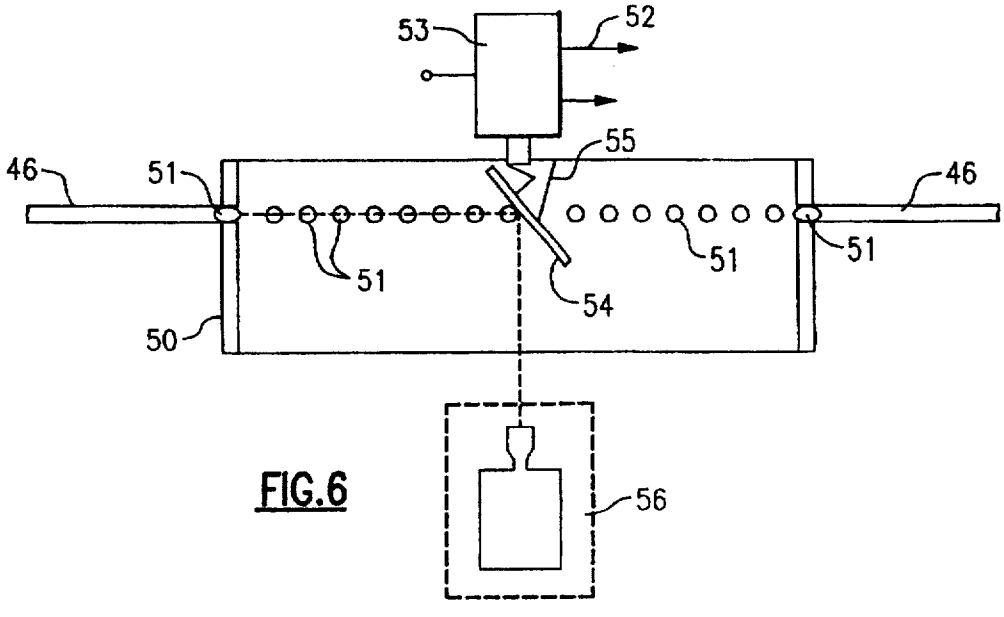

FIG.6

286 || @HighEarthOrbit_ linktr.ee/Grider2

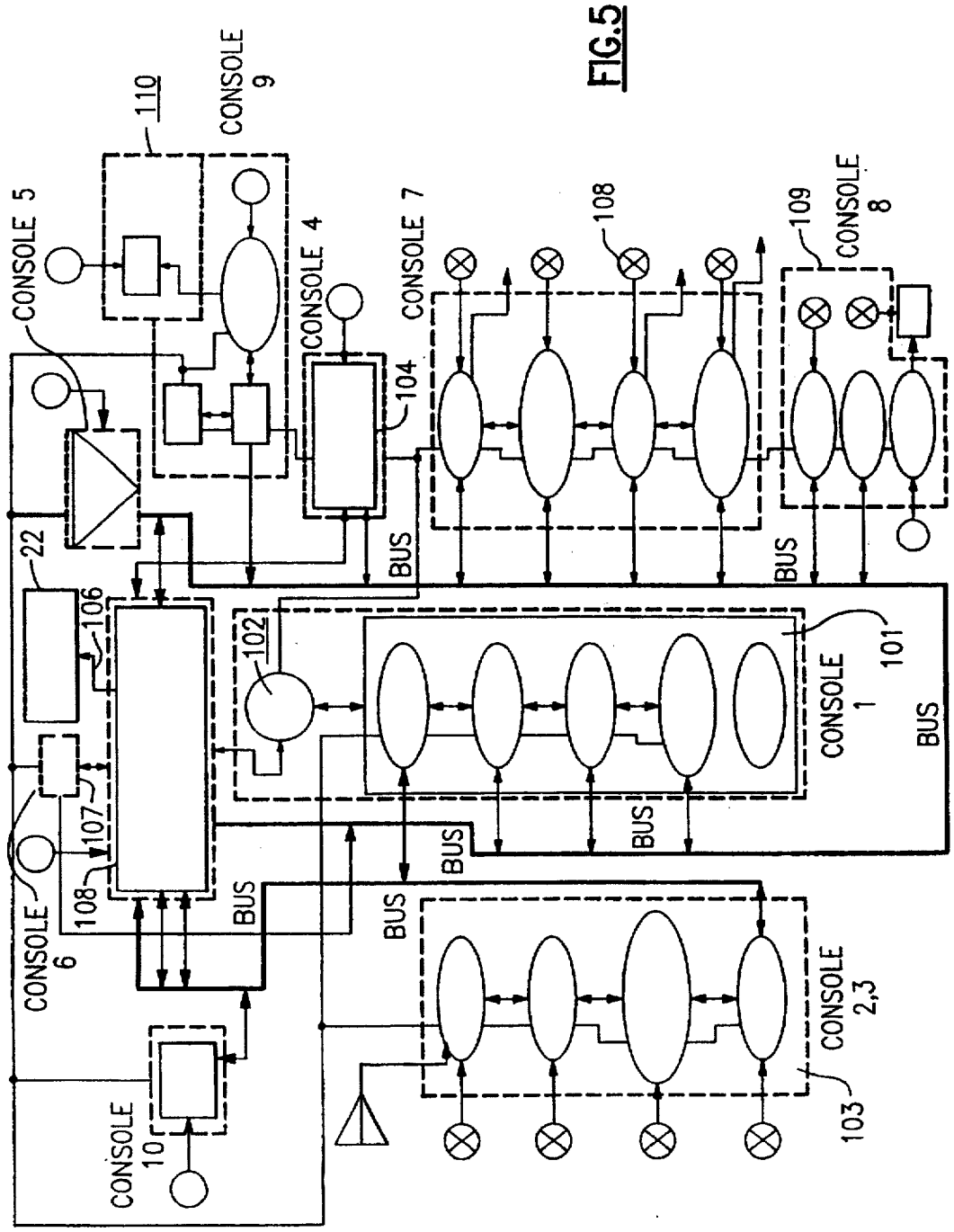

FIG.5

287 | | @HighEarthOrbit_ linktr.ee/Grider2

AIR AND SPACE VEHICLE PROPULSION SYSTEM

BACKGROUND OF THE INVENTION

This invention relates to modes of transportation, and is especially directed to manned and unmanned aerospace (i.e., air and/or space) vehicles. The invention is specifically directed to a drive system that can be employed in such vehicles.

A technique for suspending a communications platform (i.e., a communications mirror) at a low altitude (100 to 200 kilometers) is described in U.S. Pat. No. 4,253,190 to Csonka. There, the mirror is kept aloft above the atmosphere by pressure of electromagnetic radiation that is beamed up at it from a ground antenna. A similar technique for suspending a platform at a high altitude in the atmosphere is described in U.S. Pat. No. 4,704,732 to Csonka. In that arrangement, the platform is again kept aloft by radiation from a ground station. However, in this case, the energy received by the platform is transferred to air molecules that impinge on it, and these momentum transferred to these molecules (which move downwards) provide lifting force to the platform. The temperature density of the platform is controlled, so that the net direction of force is in the desired direction. The explanation for the principles that these two patents rely on, and the supporting engineering mathematics, are contained in these two patents, and their disclosure is incorporated herein by reference.

On the other hand, no one has proposed a system for manned or unmanned aerospace flight that relies on radiation pressure, nor has anyone suggested using an on-board electromagnetic source for propulsion, either by radiation pressure or by molecular momentum transfer. Currently, chemical-based rocket drives are employed for manned vehicles, unmanned space vehicles, and orbiting craft. There is a need for a clean and economical way to travel both in air and in space, which does not rely on chemically generated thrust.

Objects and Summary of the Invention

Accordingly, it is an object of the invention to provide an effective and efficient means for transportation, in space or in the atmosphere, which avoids the drawbacks of the prior art.

It is another object to provide a mode of transportation that can be modified for use underwater.

It is a further object to provide a transportation system that employs microwave circuits that can be located in the skin or hull of the aerospace craft, and which relies on radiant pressure and particle momentum transfer principles.

According to an aspect of this invention, an aerospace vehicle drive system is provided as a part of a vessel. The vessel hull is or may be formed of multiple layers, with a void or inter-layer space formed between an inner layer and an outer layer (or group of layers). Radiators of electromagnetic power, i.e. dipole antennas, are situated in the inter-layer space. These may have reflectors formed in a part of the inner surface of this space, with the dipoles situated at the reflector. A power source, i.e., a source of electromagnetic wave energy, such as microwaves, inside the vessel is coupled to these radiators. A control mechanism, such as a control console, which may be computerized, controls the application of power to the radiators to control the direction of the net force and the amount of force that results from the drive. There may be a ring of radiators around the rim of the vessel as well.

In a preferred mode, the hull of the vessel is configured as a series of segments, and there are radiators in each of the segments. In this way the power may be controlled segment by segment. The outer layer may have a grooved inner surface, and the outer layer may be formed of either beryllium or titanium. Again, in a preferred embodiment, the vessel hull may have upper and lower hemispheres, with each hemisphere being divided into segments, i.e., thirty-six segments each having an extent of about ten degrees of arc. The outer hull may be of Teflon over a beryllium or titanium alloy. A transistion metal may be used at the grooved surface (i.e., Cr_x Mn_x antimonide, or another energy conducting material.

The propulsion system of this invention provides a clean, economical way for travel in the atmosphere or in space, and if modified can be used for marine use (surface or underwater). In each case, microwaves or other electromagnetic energy creates radiant pressure and results in particle momentum from the grooved layer of the hull.

There may be laser or maser weaponry provided in the vessel, which fire through windows provided on the rim between the upper and lower hemispheres.

The above and many other objects, features, and advantages of this invention will become apparent to persons skilled in the art from the ensuing description of a preferred embodiment, which should be considered in connection with the accompanying Drawing.

BRIEF DESCRIPTION OF THE DRAWING

FIG. 1 is a plan view of a vessel hull, illustrating segments, according to one embodiment of this invention.

FIG. 2 is a schematic view of a microwave source and control circuit.

FIG. 3 is a side elevation of the vessel hull of this embodiment.

FIG. 3A shows a section of the hull or skin of the vessel.

FIGS. 3B and 3C illustrate an edge of on of the segments of this embodiment.

FIG. 4 is a sectional elevation showing the application of power to radiators in the vessel hull.

FIG. 5 is a schematic view of a control arrangement comprised of a number of consoles.

FIG. 6 an optical transducer for the vessel of this embodiment.

FIG. 7 is a sectional view of a weapons optical window of this embodiment.

FIG. 8 is a sectional view of a portion of the hull of this embodiment.

DETAILED DESCRIPTION OF A PREFERRED EMBODIMENT

With reference to the Drawing, and initially to FIG. 1 thereof, a top plan view of the vessel or craft 10 shows the outer hull 12 and edges 14. The vessel is of a round, i.e., circular profile, and is configured into segments 16, here thirty-six segments each of ten degrees of arc.

FIG. 2 shows a power unit 20 of the type that is or may be used to power this vessel. Here, a power supply 22 supplies a maser circuit 24, which in turn provides microwave power to a maser device 26. A control input to the maser circuit 22 permits control from a control panel, to be discussed later. There are a number of these units 20 provided for each of the segments 16.

FIG. 3 is an elevational view of the hull 12, showing an upper hemisphere 28 and a lower hemisphere 30, each

288 11 @HighEarthOrbit_ linktr.ee/Grider2

having thirty six segments, as mentioned earlier. Each of these segments has a number of radiators, i.e., dipoles, and the hull is multi-layered.

FIG. 3A is a section of the hull skin or wall, and has a inner layer or group of layers **34** and an outer layer or group of layers **35**, and these define between them an inter-layer gap or space **36**. There are dipole radiators located in this space **36** for the purpose of microwave radiant emission to cause particle momentum, and resulting motive force. As shown in FIG. 3B, at an outer edge of each segment **16** there is a flange **38**, and on this flange is situated one or more dipole antennas or radiators **40**, which may be on a post above a spheric reflector **42**.

Within the hull, there are a number of these dipoles **40** situated on similar reflectors **42** on the inner layer **34** facing the outer layer **35** across the gap or space **36**. Inside the ship or vessel **10** there are respective microwave generators, i.e., power units **20**, each contained in a respecive pod in this embodiment. Ceramic magnetic conduits **44** carry microwaves to the dipole radiators **40** which are situated in reflectors **42** in the hull skin (see FIG. 3B). For simplicity, only two of these are shown here. Also shown here, along the plane between the upper and lower hemispheres, there are or may be a plurality of traveling-wave wave guides **46** connecting an optical pump (discussed later) to optical windows **48** along the edge **14** of the hull.

A control console arrangement is shown schematically ih FIG. 5, comprised of a number of console boards, and joined to one another by signal and power buses. Here, a first console **101** contains modules for pilot communication, flight control, weapons triggering and targeting, systems monitoring and instrumentation, and life support monitoring. This console **101** has an associated joystick control **102** for pilot control of vehicle movement and of weaponry. Second and third comm interface consoles **103**, here shown together, control communications and include modules for impedance matching, microwave transmission, compensation to correct error, and microwave transmission. A main communications console **104** is configured for connection with all exterior sites. A main computer console **105** coordinates all functions and monitors coordinates on board, conducts system checks and diagnostics, and connects to the joystick **102**. This also controls stealth functions, using the microwave director antenna. Stealth may be active or passive. The main computer supplies control signals also along a signal bus **106** to the maser circuits **22** in each of the upper and lower segments. The main computer module **105** also connects to a life support systems console **107**. At a weapons maser control console **108**, there is a maser impedance matching module, an error correction module, a mixer control module, and a maser mirror control module, for stepmotor control, to be discussed shortly. Another module **109** has an RF control module, a systems check module, and RF generator module, and an RF' output module. This provides RF signal to a marconi omnidirectional antenna on the bottom of the hull **12**. A similar module **110** provides RF signal to a marconi omnidirectional antenna on the top of the hull.

FIG. **6** illustrates the optical transducer that provides and directs optical energy to the traveling-wave wave guides **46** that carry it to the optical windows **48**. A drum or cylindrical housing **50** holds respective optical connectors **51** for each of the guides **46**. Each connector is at a predetermined angle in respect to the center of the housing **50**. Stepmotor power lines **52** connect between a stepper motor **53** and the console **108**, and the stepper motor controllably rotates an optical reflector or mirror **54** that is positioned on a mount **55** that is fitted onto the shaft of the motor **53**. A maser **56** or other source of energized particles or photons is or may be positioned on the axis of the stepper motor **53**, and the mirror steers the optical axis of the maser **56** to align with one or another of the travelling wave waveguides **46**.

The outer or distal end of the waveguides **46** is shown in detail in FIG. **7**, where an end termination **58**, i.e., an optical pump and focussing device, emits energy through the optical window **48** at the rim **14** of the vessel. The upper and lower hemispheres **28**, **30** of the hull **12** are shown here also.

Details of the structure of the hull **12** are shown in FIG. **8**. Here, one of the radiators **40** is shown in a portion of the hull inner layer **34**, situated in an associated concave reflector **42** formed in the layer **34**. The outer layer **35** is situated across the inter-layer space **36** from the layer **34**. Here, the facing (lower) side of the outer layer **35** is formed of a conductive material having grooves or teeth **60**. These may be formed of beryllium or titanium, and exterior of these grooves or teeth, the remaining layer portion **62** may be the same or a different material, such as Teflon. Electromagnetic energy, i.e., microwaves, become trapped in the grooves **60** or between the teeth and the trapped energy creates heat, that in turn creates particle momentum for propulsion purposes, as discussed above and in connection with U.S. Pat. No. 4,704,732. The inner hull layer **34** may have removeable panels to provide access for maintenance, except that the distance from radio emitter to the surface **60** is reduced to a few inches.

The hull **12** of the vessel or craft **10** may be a titanium alloy of the type commonly used by government space agencies and contractors, or may be a pure beryllium. The inner hull layer may be a titanium alloy. In the weapons system, the optical windows **48** may be a crystal composite, with outer layer of sapphire and inner center of ruby. The wave guide **46** may be a tunable wave guide.

The control consoles, as discussed above with reference to FIG. 5, constitute the interface for the pilot. These may provide the pilot with all needed data and controls through buslines to the computer. Panel controls are mounted into the consoles so as to be accessable to the pilot. The omnidirectional marconis are for communications and sensors (telemetry). A main gyroscope connects with the pilot's gyroscope and gives positional data used in navigation and (optionally) for radio astronomy. The consoles also monitor life support functions, and may connect with instrumentation for checking atmosphere, humidity, and temperature. The consoles also employ a joystick control for the pilot to control direction and amount of levitation and thrust, and for control of weaponry. The weapons can be pre-tested at a low energy level, i.e., by using the maser **56** at a low energy level, for flight check and simulations, and in connection with director stealth functions.

In a preferred mode, the dipoles **40** may have an impedance of 300 ohms. A transistion metal alloy, such as chromium-manganese-antimony may be used in the vehicle hull **12**, with the amount of antimony being selected to change the transistion point at which is starts to create a magnetic flux. Common ceramic permanent magnet materials may be used for microwave applications in connection with this invention, such as barium ferrite (oriented), strontium ferrite, yttrium iron garnet, yttrium aluminum, gadolinium garnet, dysprosium (in ferrite). Beryllium aluminum (i.e., 33% aluminum) may be used as a beryllium alloy, as it has a good tensile strength and a high conductivity and high heat capacity, as well as being non-magnetic. Beryllium oxide, which may provide surface insulation, is a good conductor of heat.

289 | | @HighEarthOrbit_ linktr.ee/Grider2

The vessel according to this invention provides a clean, economical means for transportation in air or in space, and may be adapted for travel in or under water. The pilot or operator, one inside the vessel, can power up the systems, initiate pre-flight checks, and then use the joystick to engage and initiate flight.

While the invention has been described in reference to a preferred embodiment, it should be understood that the invention is not limited to that precise embodiment. Rather, many modifications and variations will present themselves to those skilled in the art without departing from the scope and spirit of the invention, as defined in the appended claims.

I claim:

1. An aerospace vehicle drive, comprising a hull, said hull having a plurality of layers defining an inter-layer space between two of said layers; a plurality of electromagnetic emitters situated in said inter-layer space; power means within said hull providing electromagnetic energy; and control means for controlling application of said electromagnetic energy to the respective emitters and thus control the net amount and direction of force provided by said drive.

2. The aerospace vehicle drive according to claim 1, wherein said emitters comprise dipole emitters.

3. The aerospace vehicle drive according to claim 1, wherein said hull is configured as a plurality of segments, with each segment having one or more of said emitters.

4. An aerospace vehicle drive comprising a hull, said hull having a plurality of layers defining an inter-layer space between two of said layers; a plurality of electromagnetic emitters situated in said inter-layer space; power means within said hull providing electromagnetic energy; and control means for controlling application of said electromagnetic energy to the respective emitters and thus control the net amount and direction of force provided by said drive, wherein an outer one of said layers has a grooved inner surface.

5. The aerospace vehicle drive according to claim 4, wherein said outer layer is formed of beryllium or titanium.

6. An aerospace vehicle and drive mechanism therefore, comprising a hull having upper and lower hemispheres, each hemisphere being divided into a plurality of segments; a plurality of electromagnetic emitters distributed over the hull such that each of said segments has one or more of said emitters; a source of electromagnetic energy within the hull, and supplying electromagnetic energy to said emitters; and control means for controlling application of said electromagnetic energy to the respective emitters and thus control to the net amount and direction of force provided by said drive.

7. The aerospace vehicle and drive mechanism therefor, according to claim 6, wherein said hull is in the form of a plurality of layers defining an inter-layer space between two of said layers, and wherein at least some of said emitters are situated in said inter-layer space.

8. An aerospace vehicle and drive mechanism therefore, comprising a hull having upper and lower hemispheres, each hemisphere being divided into a plurality of segments; a plurality of electromagnetic emitters distributed over the hull such that each of said segments has one or more of said emitters: a source of electromagnetic energy within the hull, and supplying electromagnetic energy to said emitters; and control means for controlling application of said electromagnetic energy to the respective emitters and thus control the net amount and direction of force provided by said drive; wherein said hull is in the form of a plurality of layers defining an inter-layer space between two of said layers, and wherein at least some of said emitters are situated in said inter-layer space; and wherein an outer layer of said hull has a grooved inner surface.

* * * * *

290 || @HighEarthOrbit_ linktr.ee/Grider2

March 8, 1960 W. R. MELLEN 2,927,746

TOROIDAL AIRCRAFT

Filed May 29, 1956 4 Sheets-Sheet 1

Fig. 1

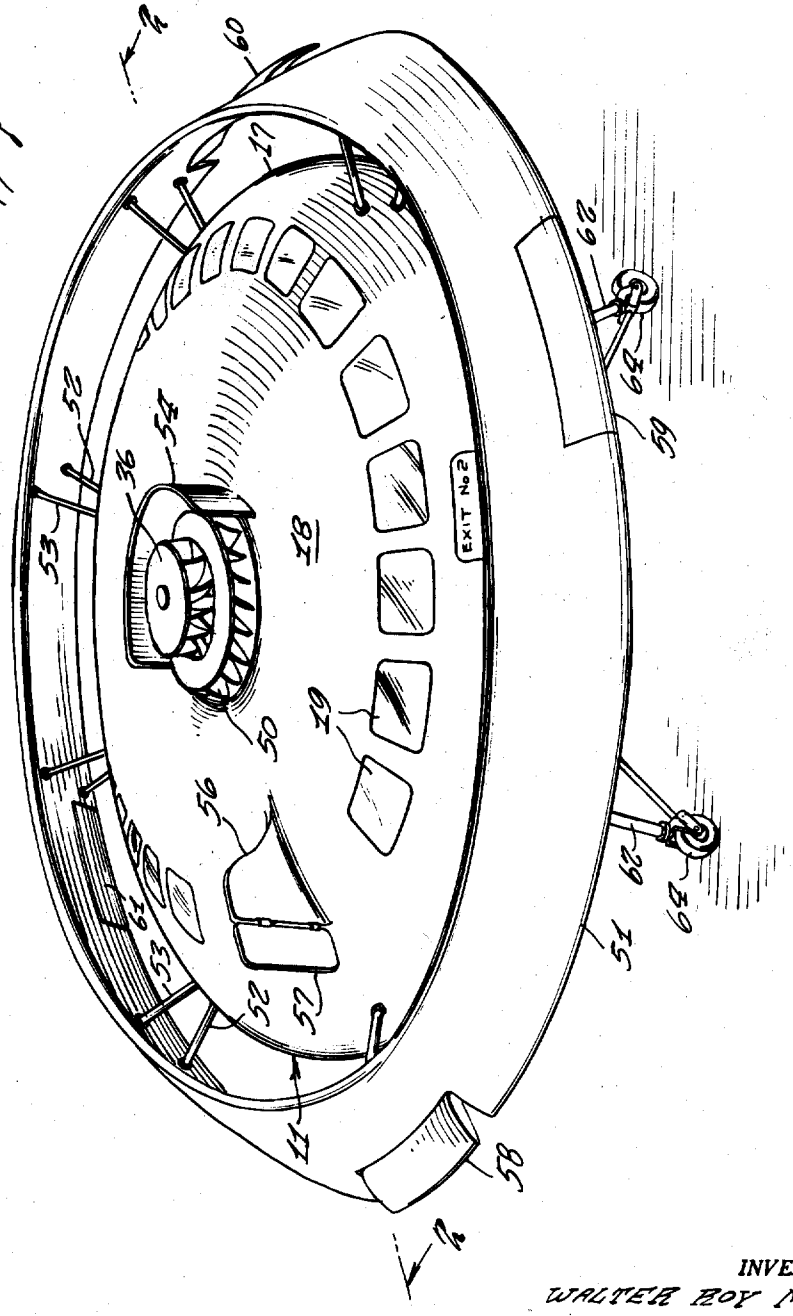

INVENTOR.
WALTER ROY MELLEN
BY
Carl Miller
ATTORNEY

291 || @HighEarthOrbit_ linktr.ee/Grider2

March 8, 1960 W. R. MELLEN 2,927,746

TOROIDAL AIRCRAFT

Filed May 29, 1956 4 Sheets-Sheet 2

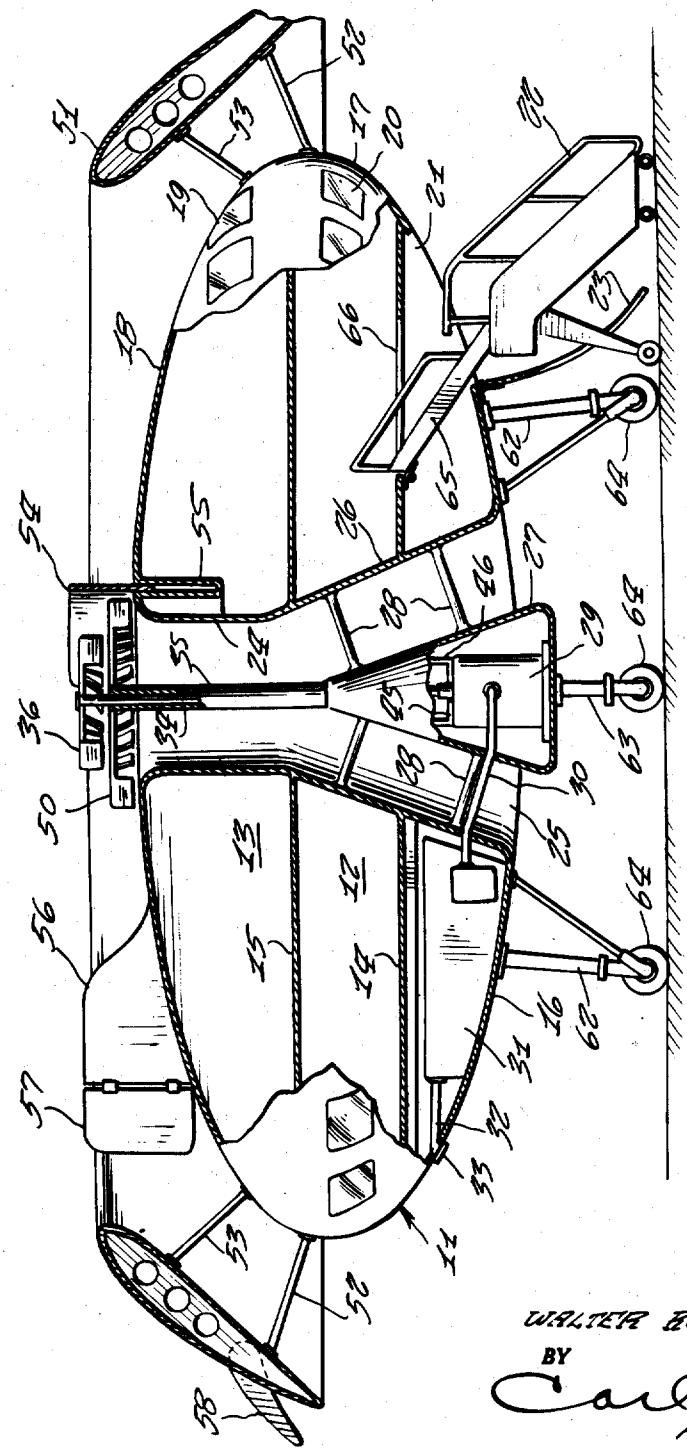

Fig. 2

INVENTOR.
WALTER ROY MELLEN
BY
Carl Miller
ATTORNEY

292 || @HighEarthOrbit_ linktr.ee/Grider2

March 8, 1960 W. R. MELLEN 2,927,746

TOROIDAL AIRCRAFT

Filed May 29, 1956 4 Sheets-Sheet 3

Fig. 3

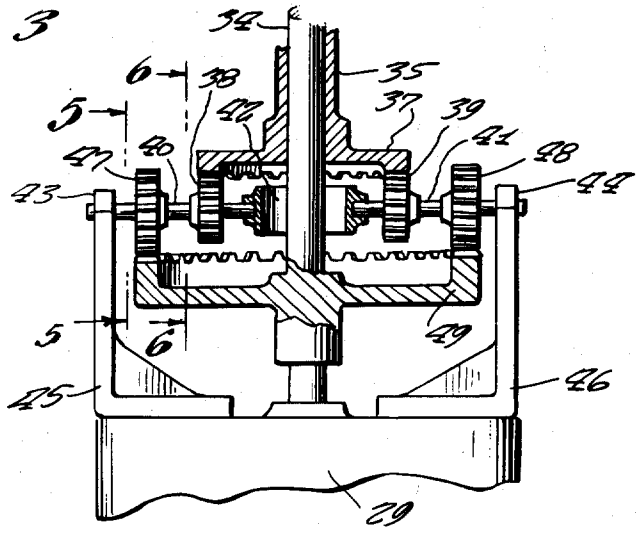

Fig. 4

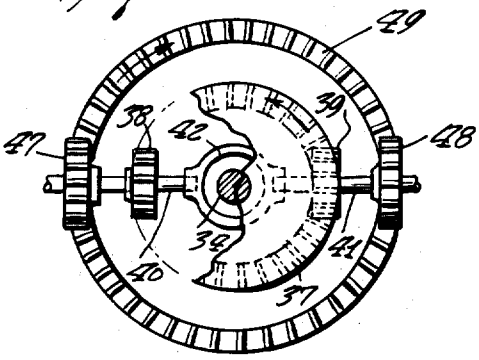

Fig. 7

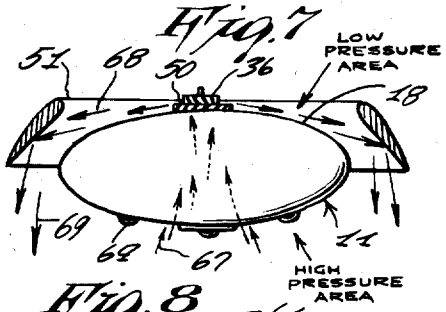

Fig. 5

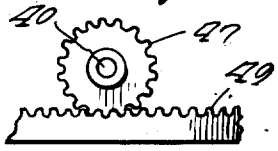

Fig. 8

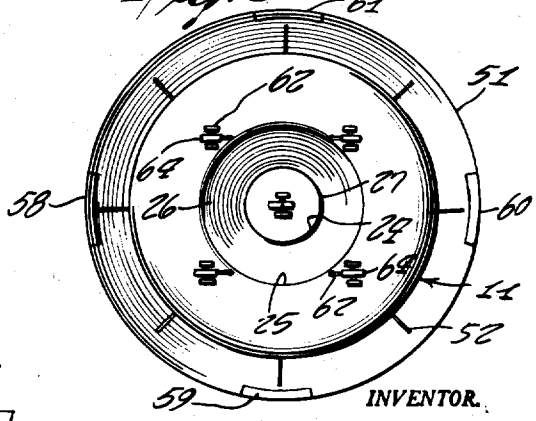

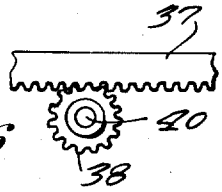

Fig. 6

INVENTOR.
WALTER ROY MELLEN
BY
Carl Miller
ATTORNEY

293 || @HighEarthOrbit_ linktr.ee/Grider2

TOROIDAL AIRCRAFT

Filed May 29, 1956 4 Sheets-Sheet 4

Fig. 9

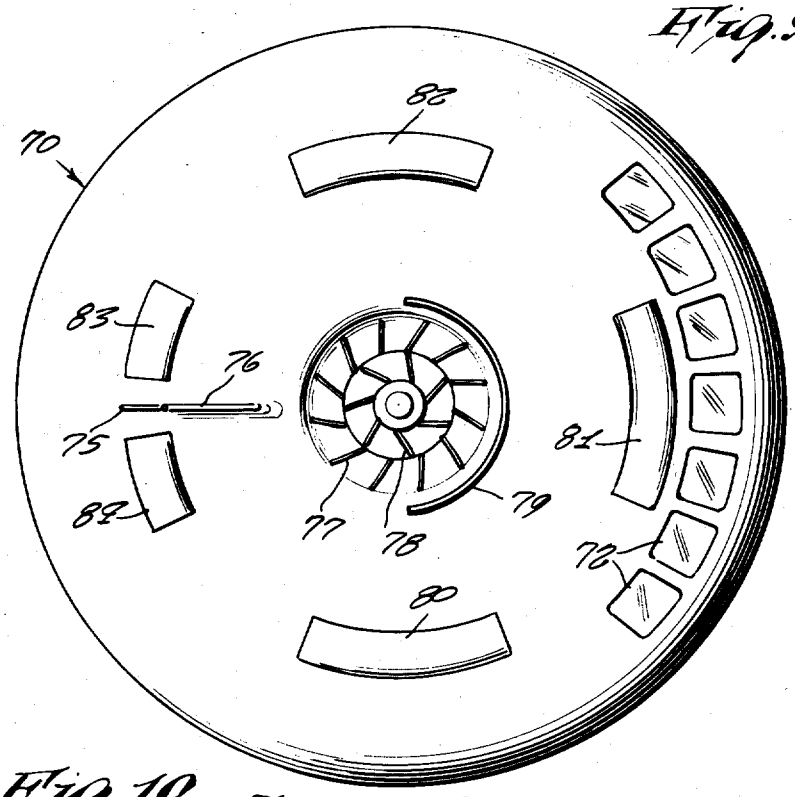

Fig. 10

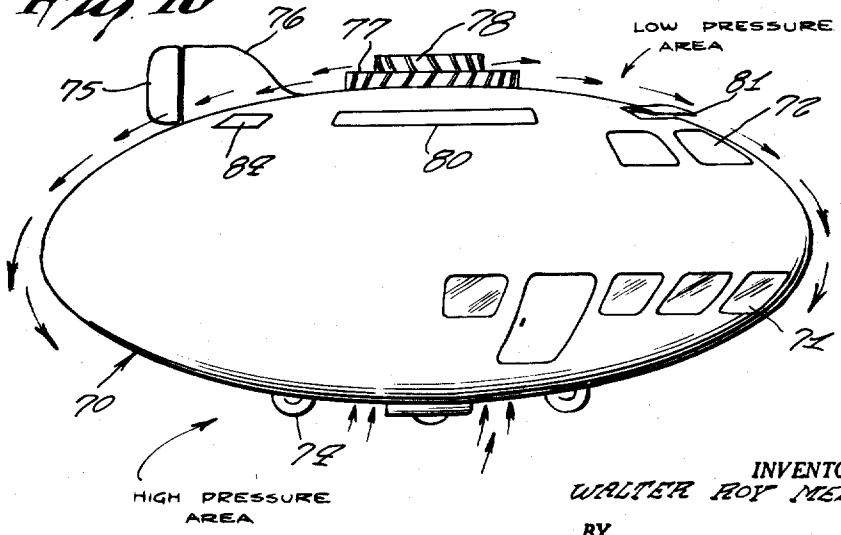

INVENTOR.
WALTER ROY MELLEN
BY
Carl Miller
ATTORNEY

294 || @HighEarthOrbit_ linktr.ee/Grider2

United States Patent Office

2,927,746

Patented Mar. 8, 1960

2,927,746

TOROIDAL AIRCRAFT

Walter Roy Mellen, Roslyn Heights, N.Y.

Application May 29, 1956, Serial No. 588,045

2 Claims. (Cl. 244—12)

This invention relates to aircraft of the heavier than air type, and particularly to what I choose to term toroidal aircraft.

The main object of my invention is to produce a type of aircraft which is primarily built in the form of a toroid, and which therefore has several advantages lacking in conventional types of the airplanes and the like.

An ancillary object of my invention is to have a toroidal aircraft which requires a minimum of driving power to operate it in contrast with that required by other aircraft of similar types.

Another object of this invention is to have such an aircraft which by the very nature of its construction and form is free from dangerous exposure of operative parts as in rotating wing craft.

A further object of the invention is to have an aircraft as indicated which requires very small landing and take-off space.

Still another object of the invention is to have such aircraft which may safely be operated near other aircraft of the same type.

It is, of course, an important object of the invention to have a toroidal aircraft as mentioned which is simple in overall form and simple, yet effective to operate.

Other objects and advantages of my invention will appear in greater detail as the specification proceeds.

In order to facilitate ready comprehension of this invention for a proper appreciation of the salient features thereof, the invention is illustrated on the accompanying drawings forming part hereof, and in which:

Figure 1 is a perspective view of a toroid aircraft made according to my invention and embodying the same in a practical form;

Figure 2 is a vertical section of the same aircraft as taken on line 2—2 in Figure 1;

Figure 3 is a side elevation, partly in section of the rotor drive gearing of the aircraft of Figures 1 and 2;

Figure 4 is a top plan view of the same drive gearing as seen from above in Figure 3;

Figure 5 is a vertical section of the gearing as taken on line 5—5 in Figure 3;

Figure 6 is another vertical section thereof as taken on line 6—6 in the same Figure 3;

Figure 7 is a reduced diagram, partly sectional based on the aircraft of Figures 1 through 3 showing the nature of the air flow of the craft in active operation;

Figure 8 is a bottom view or plan of the same as seen from below in Figure 7;

Figure 9 is a top plan view of a modification of the aircraft; and

Figure 10 is a side elevation of the aircraft of Figure 9.

Throughout the views, the same reference numerals indicate the same or like parts and features.

In aeronautics, it is well known to have vanes and wings or blades upon propellers and rotors for lifting and propelling aircraft, and the type of vanes or wings often impart the name and nature of the craft to the type involved. In general, such craft have more or less exposed

moving wings and vanes or blades, and in this respect are very vulnerable to damage from many sources and therefore dangerous in their very nature. It has occurred to me that certain features of air rotors and the like should be capable of useful effect and operation when located in a more sheltered construction such as an actual saucer or toroid type of structure and the like to solve the problems of danger and lift. As a result, I have developed a toroid aircraft as already outlined, which will now be described in detail in the following, due reference being had to the accompanying drawing previously mentioned.

Hence, in the practice of my invention, a hollow toroid body generally indicated at **11** contains two superposed passenger chambers **12** and **13** having the individual floors **14** and **15** and outer walls, lower wall **16** peripheral rounded wall **17** and top or roof **18**. The peripheral wall **17** contains the upper and lower rows of windows **19** and **20** for the two chambers, while an opening **21** is accessible for entry of passengers by way of portable stairs **22** when the bottom door **23** is dropped open as shown. Upwardly through the axial center of the aircraft body **11** extends an air drive column **24** which is substantially cylindrical and tubular in its upper portion while flaring conically outward in the downward direction and forming a large air intake opening **25** at the lower end of the flaring portion **26**.

Within the central air column **24**, **26** and projecting down thru opening **25** is a conical motor housing **27** secured to the walls of the air column by radial rods **28**, **28** and containing a driving motor **29**, preferably of the fuel combustion type having a feed pipe **30** connected thereto and running from a fuel tank **31** having a filling pipe fixture **32** closed by a removable cap **33** exposed upon the lower body wall **16**. Manual controls and valves, throttles and the like are omitted for clarity in the drawing because such control means must be understood as they are well known and do not necessarily include any new features inherent in the invention as such.

Motor **29** has a drive shaft **34** extending upwardly through rotor tube **35**, through the upper end of motor housing **27** and at its upper end carrying a radial blower fan **36**. As best seen in Figures 3 to 6, inclusive, the tube **35** which is rotatable about shaft **34** has a crown gear **37** upon its lower end meshing with a pair of spur gears **38**, **39** mounted upon aligned shafts **40**, **41** extending rotatably at their inner ends into the central stationary ring-yoke **42** surrounding shaft **34** but out of contact therewith. The outer ends of these independent shafts **40**, **41** are rotatably supported in the upper bearing ends **43**, **44** of a pair of opposite brackets **45**, **46** fixed upon motor **29**. Within these bracket bearings **43**, **44** are fixed further spur gears **47**, **48** upon these shafts, which in turn mesh with a second larger crown gear **49** fixed upon vertical rotor shaft **34** a distance below the first mentioned crown gear **37** upon tube or sleeve **35**. These crown gears may well be bevel gears, if desired, but in any event, rotation of drive shaft **34** with its gear **49** naturally rotates spur gears **47** and **48** in opposite directions and thus also gears **38** and **39** with them, the latter gears in turn rotating gear **37** in the opposite direction to that of gear **49**. The sleeve **35** is thus rotated by gear **37** in the opposite direction to shaft **34** with its upper fan rotor **36**, and as sleeve **35** rotates in the opposite direction, this also holds for the second fan rotor **50** which surmounts the sleeve. The two fan rotors thus rotate in opposite directions and tend to sweep the air outwardly in radial directions off the rounded roof **18** of the aircraft body **11**.

As the mentioned aircraft body is formed with an airfoil profile, this creates a low pressure area upon the flat dome **18**, but the lifting effect is increased by disposing about the toroid body a circular wing **51** inclined

295 || @HighEarthOrbit_ linktr.ee/Grider2

outwardly downward in section and secured in position by a series of pairs of anchoring rods **52**, **53**. This wing is located at the proper raised level to intercept the radial air currents set up by rotors **36** and **50**, and to give direction to the craft under such air drive. Three features are included in the structure, the first being a curved upright air shield **54** which may be raised from or lowered partly or fully into a curved recess **55** in the top of the craft. This shield normally cuts off the horizontal air drive from the rotors in the forward direction opposite to the rudder **56** with its movable rudder member **57** while freely allowing such driving air to strike the wing **51** about and rearwardly of the rudder structure that form the second feature. The third feature includes the four ailerons **58**, **69**, **60** and **61** that serve to tilt the whole craft in the direction of the particular aileron that is swung outward as in the case of rear aileron **58** in Figures 1 and 2. The controls for operating the rudder member **57** and the ailerons are omitted as well known and understood as included.

Beneath the craft are fixed a group of roller studs or legs **62**, **62**, **63** with ground rollers **64** for supporting the craft when on the ground at port. The door **23** in the bottom **16** allows the inside stair **65** to swing down through floor opening **66** to rest on the portable stairway **22** already referred to above. When the craft is to be raised into the air, the motor **29** is started, causing both drive fan rotors **36** and **50** to drive air away from the center out from the rounded top **18** of the body **11** against the inclined under surface of ring-shaped wing **51**, producing a double lift by means of low pressure over the curved top surface **18** and upward push beneath wing **51**. The shield **54** governs the amount of air allowed to reach more or less of the wing **51**, while the swingable rudder member **57** serves to steer the craft, and the ailerons **58** to **62** serve to tilt the whole as desired and give rising angle to the craft. The action may be followed diagrammatically in Figures 7 and 8, in which arrows **67** indicate how the air rises through the central air column to fan drive rotors **36** and **50** and how the latter drive the air radially outward as per arrows **68** to impinge on the inner surface of wing **51**, and rebound downward as per arrows **69**. The roller studs are withdrawn so as to avoid projecting to any great extent, while the windows are omitted for simplicity in these diagrammatic views. As the air drive rotors rotate in opposite directions, they eliminate any tendency of spinning the craft about a vertical axis and allow easy steering by the rudder.

In Figures 9 and 10 are shown a modification of the aircraft in which the toroid hollow body indicated at **70** has the same general outline as the body **11**, with the lower and upper windows **71** and **72** for the passenger chambers and the lower door **73**, as well as the landing gear **74** resembling the gear **62**, **63**, **64** described before. A dirigible rudder **75** hinged to stationary rudder **76** serves to steer the craft while the fan rotors **77**, **78** are similar to rotors **36**, **50**. There is in this case no spaced circular wing deflector, although it has the upper front curved air shield **79**. Instead of the four ailerons on the circular wing deflector **51**, this form of aircraft has at least as many upper deflectors **80**, **81**, **82** and the rear pair **83**, **84**, which are operated by raising them individually as deflector **81**. The motor drive with shaft and sleeve and gears are as described, and the central air column drawing up air to the fan rotors is also as previously described in connection with Figures 1 to 8. Deflection of the air downward around body **70** is obtained partly by the tendency an air stream has to follow a curved surface and partly by boundary layer control obtained from the air being drawn in under the lower surface of the body **70**.

Manifestly, variations may be resorted to, and parts and features may be modified or used without others within the scope of the appended claims.

Having now fully described my invention, I claim:

1. A toroidal aircraft including the combination of a hollow toroid body circularly developed about an upright central axis, the toroid body having an upwardly convex top and a downwardly convex bottom with passenger compartments located within and windows for the compartments exposed upon the exterior of said body, landing gear with roller studs secured beneath the latter, a stationary rudder mounted upon the top and provided with a hinged rudder member connected thereto, a circular baffle surrounding the toroid body in uniformly spaced apart relation, said baffle being downwardly and outwardly inclined and located with its upper inner edge or periphery located at a distance above the top of said body and the lower outer edge or periphery disposed substantially at the level of the widest diameter of said body with means for securing said baffle rigidly thereto, means for directing air inwardly beneath the bottom and upwardly axially through said body and then outwardly from the center upon the top to alter the air pressure beneath said bottom and inversely alter the air pressure upon said top, said means comprising a central vertical passage means extending axially upward through said body and having the lower portion thereof conical in form so as to flare downwardly, and means for forcibly drawing the air upwardly through said vertical passage means including an upwardly tapering motor housing in the flaring portion of said passage having a prime mover with a driven shaft extending upwardly through said passage with fan rotor means mounted upon the upper end thereof for rotation by said shaft immediately above the level of said top, said top having an arcuate recess extending a short distance downwardly thereinto with a correspondingly arcuate air shield curved about the central axis of the toroid body equipped to be raised upwardly from and lowered down into said recess to varying extent in a position diametrically opposite said rudder.

2. A toroidal aircraft according to claim 1, wherein the prime mover has plural shaft means extending upwardly through the vertical air passage and the fan rotor means comprising a pair of oppositely driven fan rotors upon the upper ends of the plural shaft means for driving air radially outward over said top, and the baffle has a plurality of aileron flaps forming movable control members upon a plurality of spaced positions on the baffle for modifying the flight of the aircraft at will.

References Cited in the file of this patent

UNITED STATES PATENTS

1,776,994	Chattin	Sept. 30, 1930
1,931,753	Darbyson	Oct. 24, 1933
2,480,040	Mitchell	Aug. 23, 1949
2,494,368	Steele et al.	Jan. 10, 1950
2,547,266	Hoglin	Apr. 3, 1951
2,563,047	Kisner	Aug. 7, 1951
2,718,364	Crabtree	Sept. 20, 1955
2,726,829	Hillis	Dec. 13, 1955

296 || @HighEarthOrbit_ linktr.ee/Grider2

June 25, 1963 G. A. HILL 3,095,163

IONIZED BOUNDARY LAYER FLUID PUMPING SYSTEM

Filed Oct. 13, 1959 11 Sheets-Sheet 1

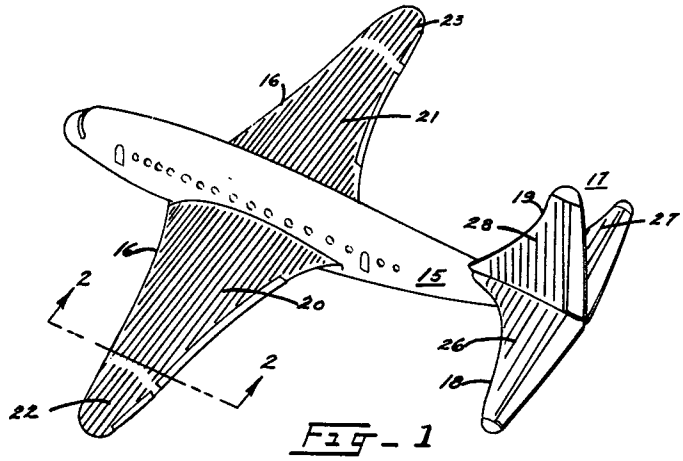

Fig. 1

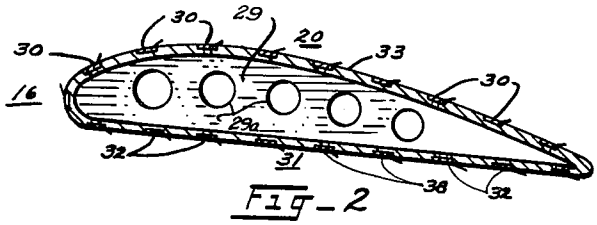

Fig. 2

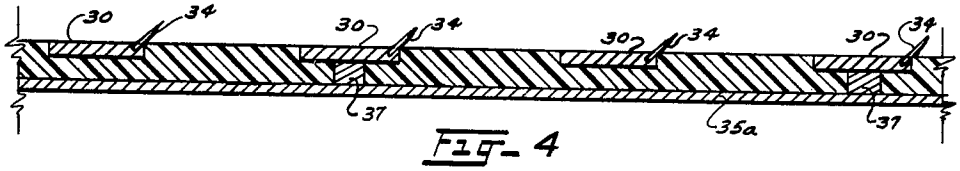

Fig. 4

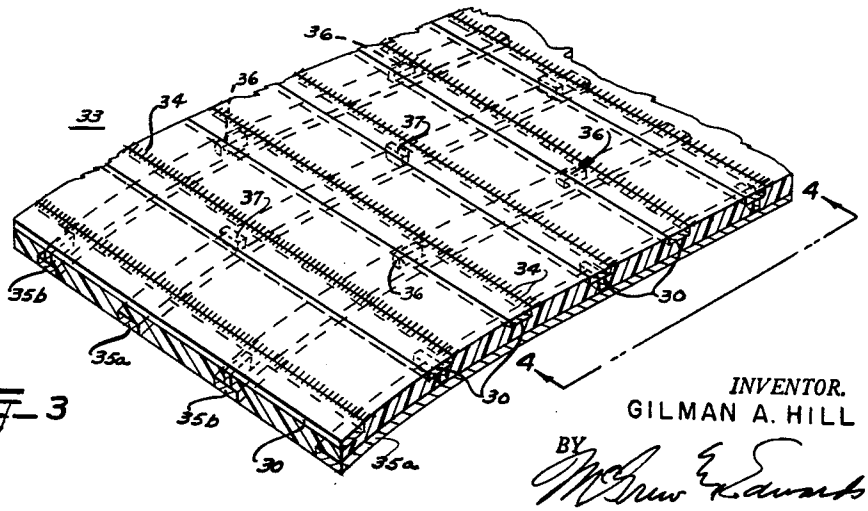

Fig. 3

INVENTOR.
GILMAN A. HILL
BY McBrew & Edwards
ATTORNEYS

297 || @HighEarthOrbit_ linktr.ee/Grider2

June 25, 1963 G. A. HILL 3,095,163

IONIZED BOUNDARY LAYER FLUID PUMPING SYSTEM

Filed Oct. 13, 1959 11 Sheets-Sheet 2

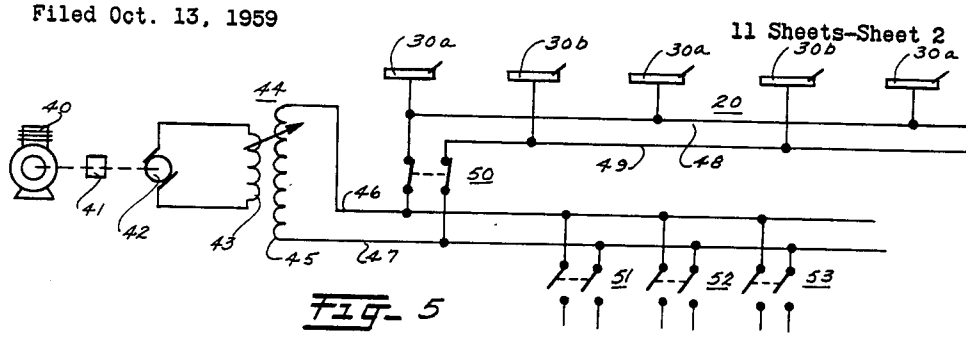

Fig. 5

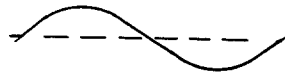

Fig 6

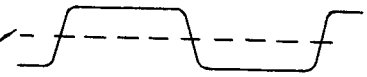

Fig 7

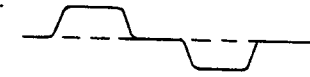

Fig 8

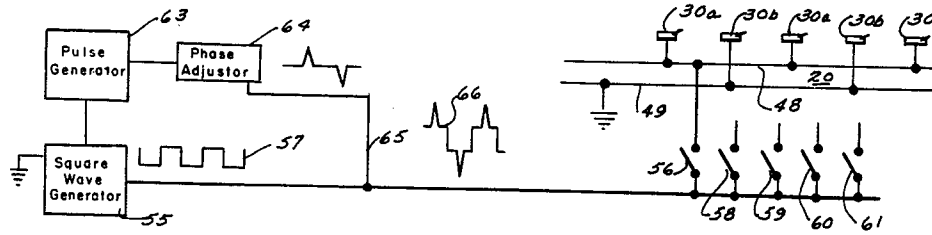

Fig 9

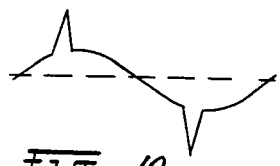

Fig 10

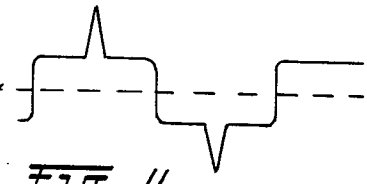

Fig. 11

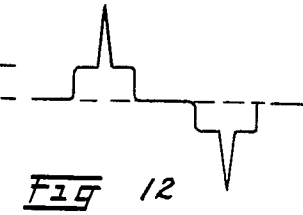

Fig 12

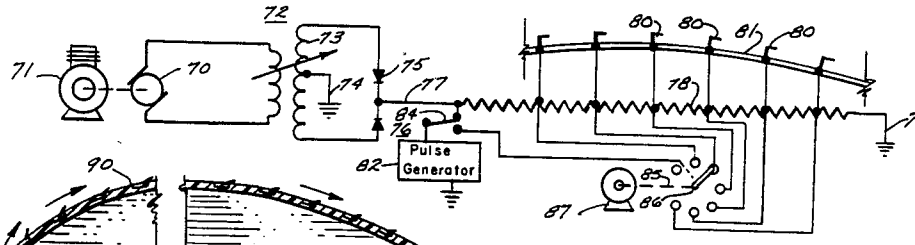

Fig. 13

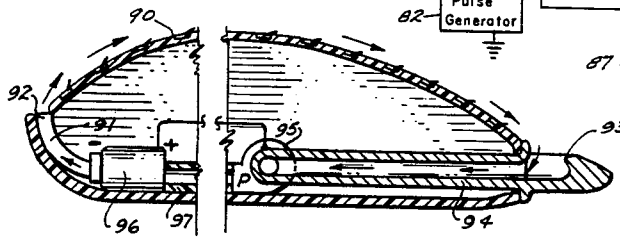

Fig 14

INVENTOR.
GILMAN A. HILL
BY
McGrew & Edwards
ATTORNEYS

298 || @HighEarthOrbit_ linktr.ee/Grider2

IONIZED BOUNDARY LAYER FLUID PUMPING SYSTEM

Filed Oct. 13, 1959 11 Sheets-Sheet 3

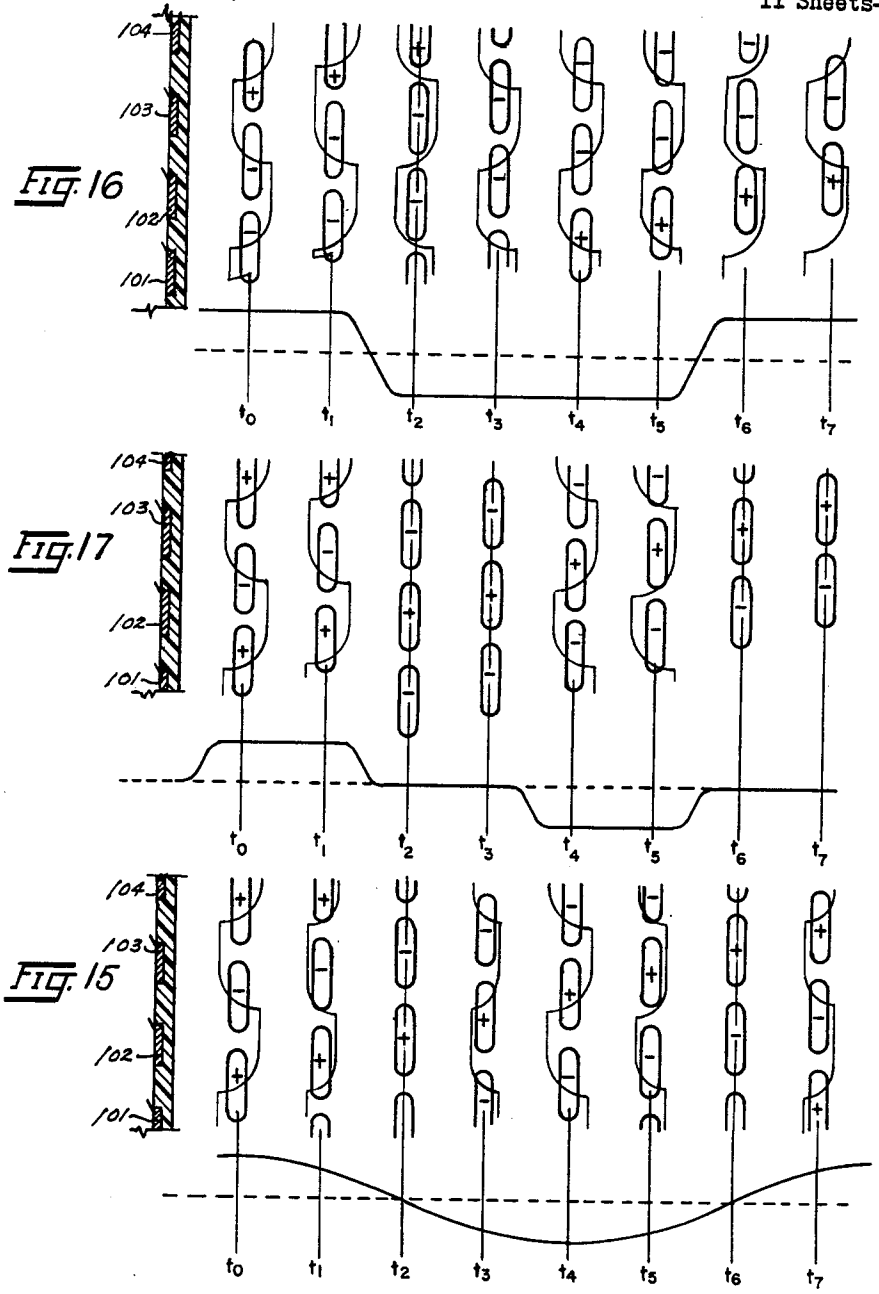

INVENTOR.
GILMAN A. HILL
BY McGrew & Edwards
ATTORNEYS

299 || @HighEarthOrbit_ linktr.ee/Grider2

June 25, 1963 G. A. HILL 3,095,163

IONIZED BOUNDARY LAYER FLUID PUMPING SYSTEM

Filed Oct. 13, 1959 11 Sheets-Sheet 4

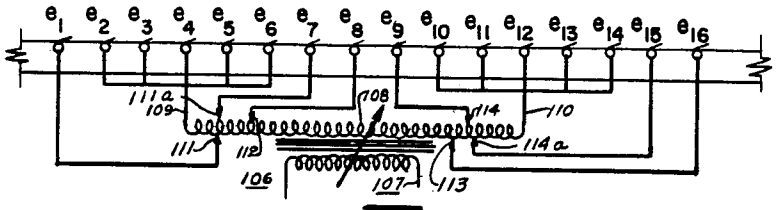

FIG. 18

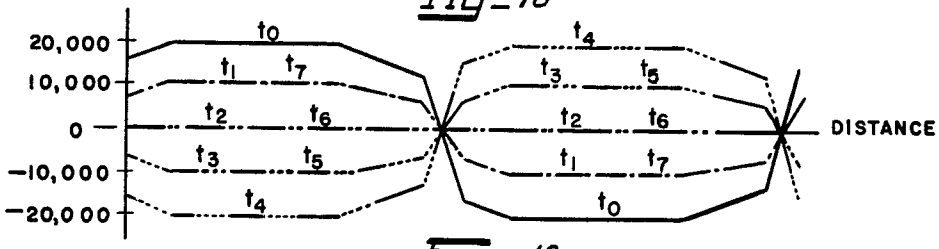

FIG. 19

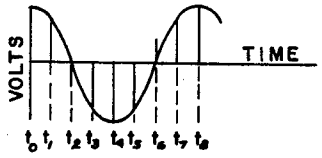

FIG. 20

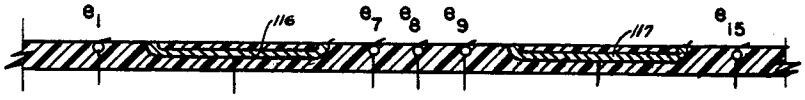

FIG. 21

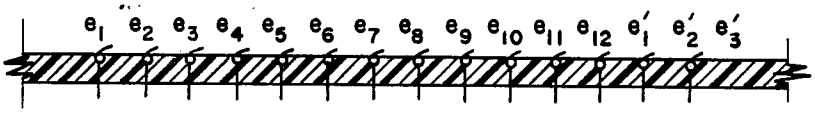

FIG. 22

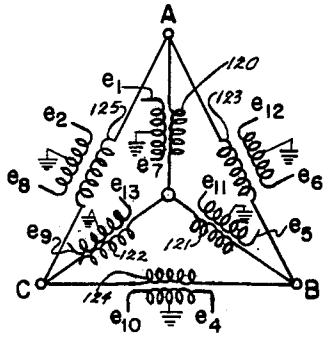

FIG. 23

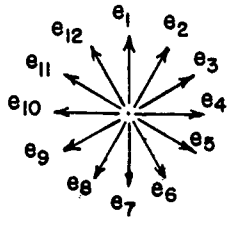

FIG. 24

INVENTOR.
GILMAN A. HILL

BY

ATTORNEYS

300 || @HighEarthOrbit_ linktr.ee/Grider2

IONIZED BOUNDARY LAYER FLUID PUMPING SYSTEM

Filed Oct. 13, 1959 11 Sheets-Sheet 5

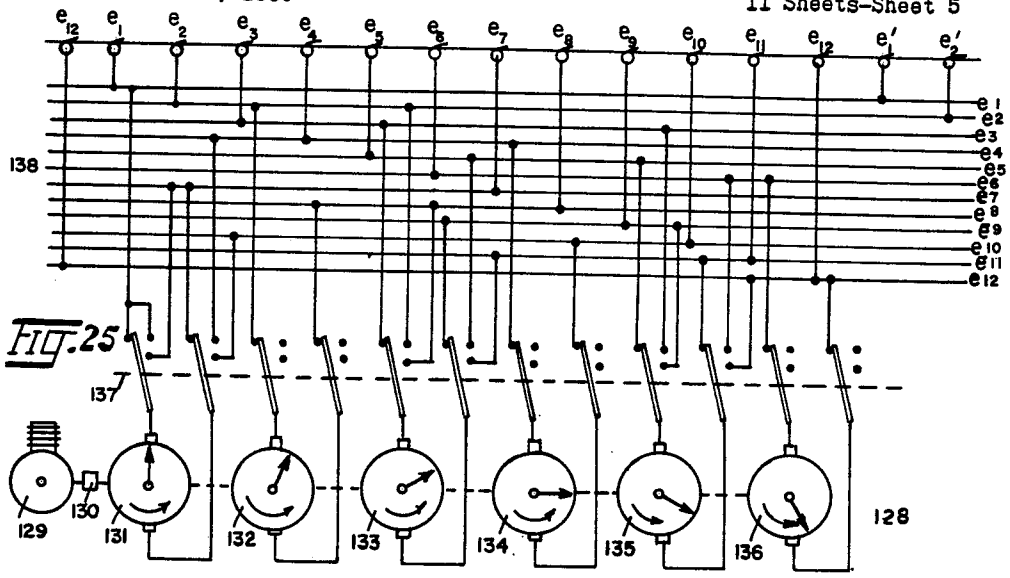

FIG. 25

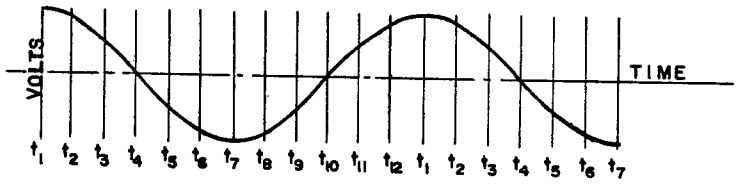

FIG. 26

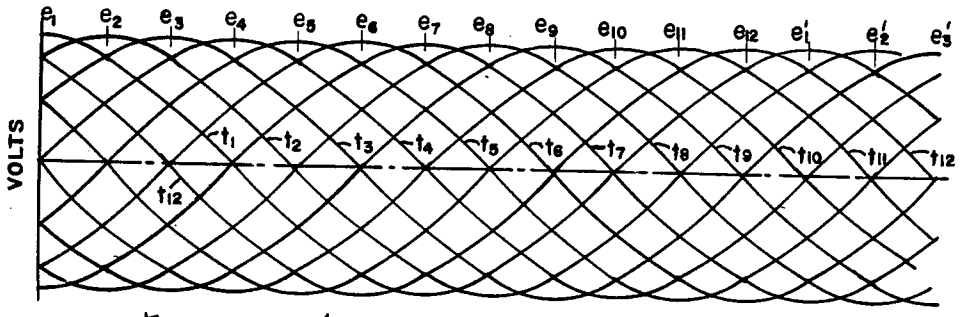

FIG. 27

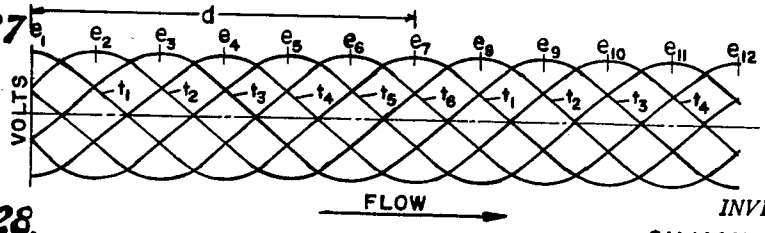

FIG. 28.

INVENTOR.
GILMAN A. HILL
BY
McGrew & Edwards
ATTORNEYS

301 || @HighEarthOrbit_ linktr.ee/Grider2

June 25, 1963 G. A. HILL 3,095,163

IONIZED BOUNDARY LAYER FLUID PUMPING SYSTEM

Filed Oct. 13, 1959 11 Sheets-Sheet 6

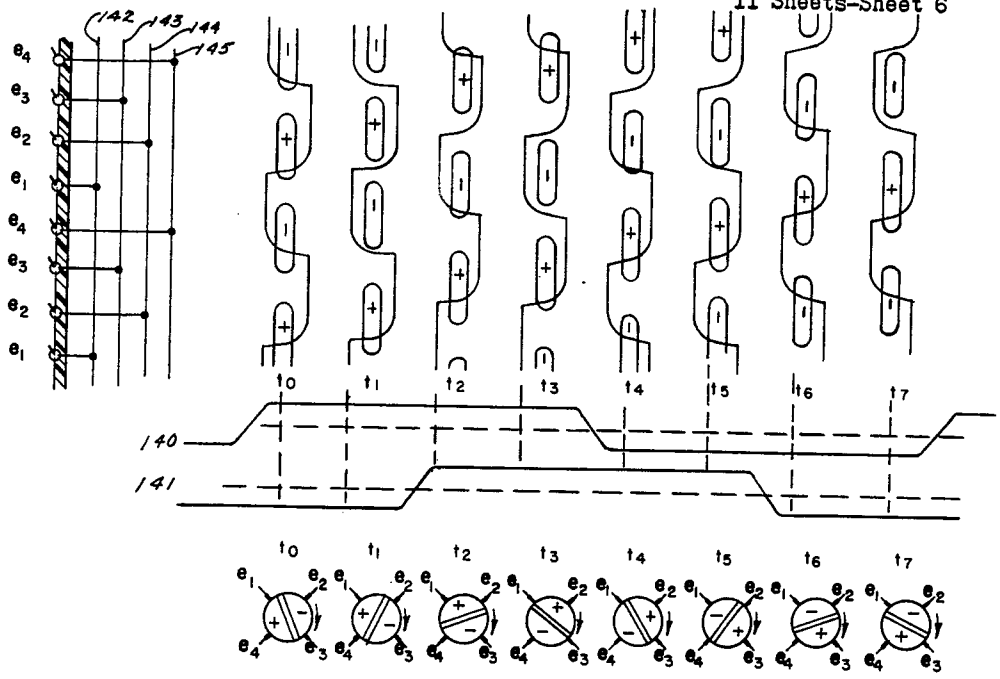

FIG. 29

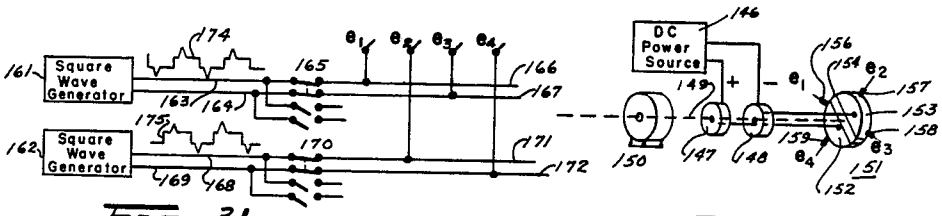

FIG. 31

FIG. 30

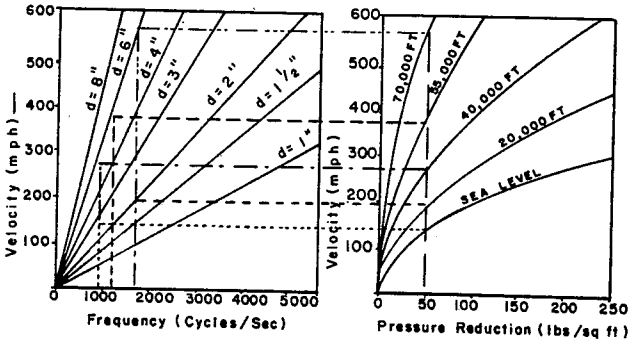

FIG. 32

INVENTOR.
GILMAN A. HILL

BY

ATTORNEYS

June 25, 1963 G. A. HILL 3,095,163

IONIZED BOUNDARY LAYER FLUID PUMPING SYSTEM

Filed Oct. 13, 1959 11 Sheets-Sheet 7

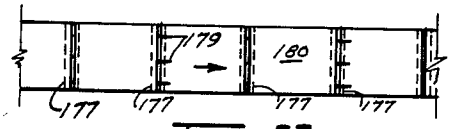

Fig. 33

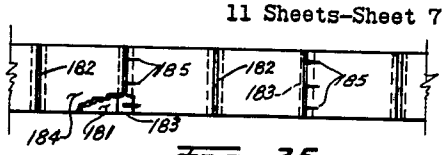

Fig. 35

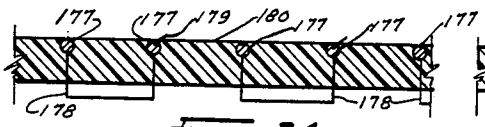

Fig. 34

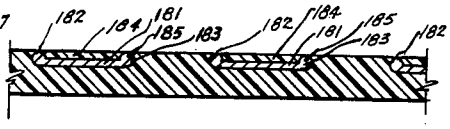

Fig. 36

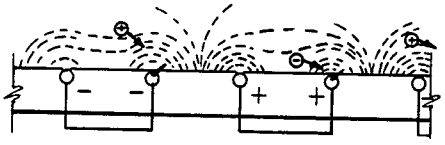

Fig. 37

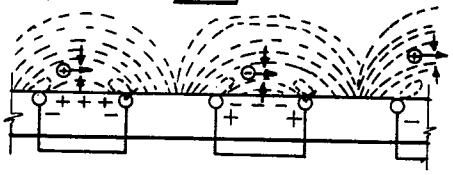

Fig. 38

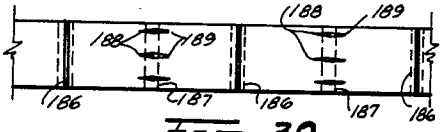

Fig. 39

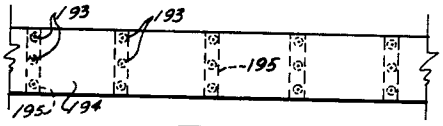

Fig. 41

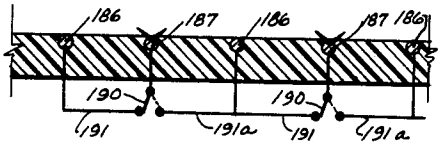

Fig. 40

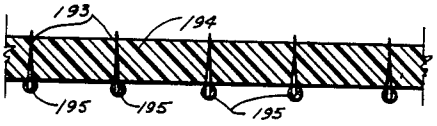

Fig. 42

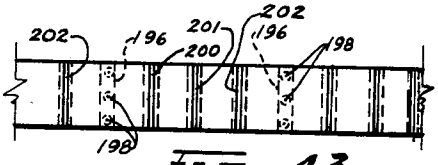

Fig. 43

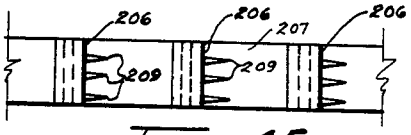

Fig. 45

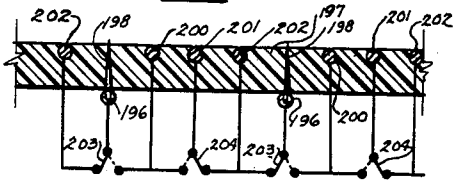

Fig. 44

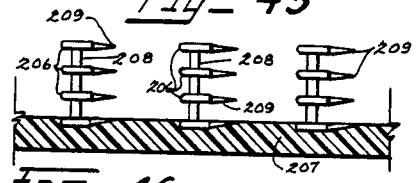

Fig. 46

INVENTOR.
GILMAN A. HILL
BY
ATTORNEYS

303 || @HighEarthOrbit_ linktr.ee/Grider2

June 25, 1963 G. A. HILL 3,095,163

IONIZED BOUNDARY LAYER FLUID PUMPING SYSTEM

Filed Oct. 13, 1959 11 Sheets-Sheet 8

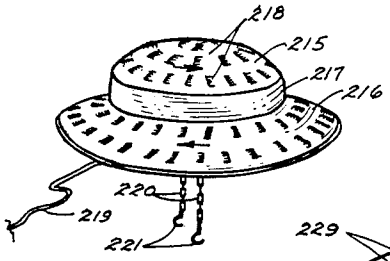

Fig. 47

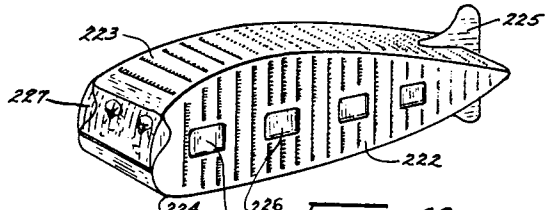

Fig 48

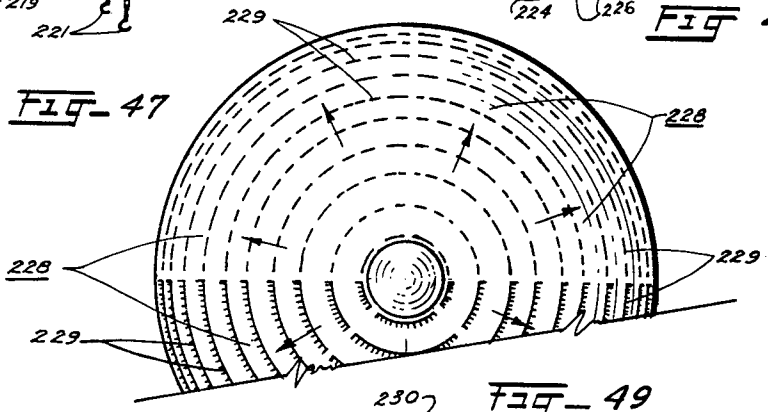

Fig. 49

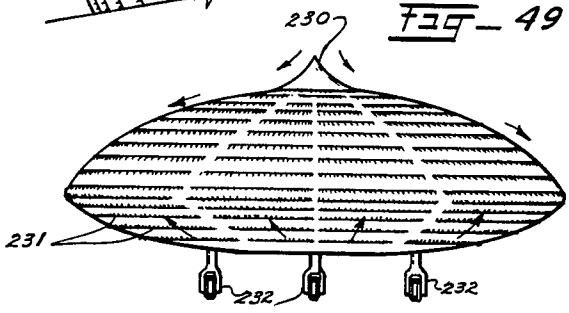

Fig. 50

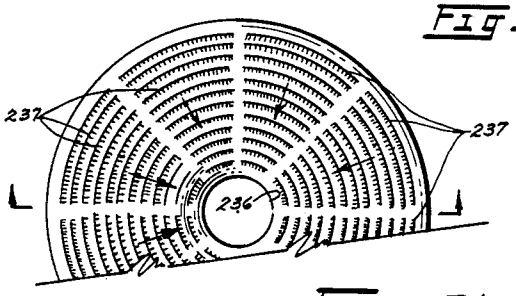

Fig. 51

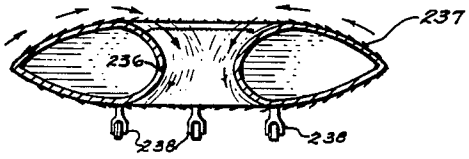

Fig. 52

INVENTOR.
GILMAN A. HILL
BY McGrew & Edwards
ATTORNEYS

304 || @HighEarthOrbit_ linktr.ee/Grider2

IONIZED BOUNDARY LAYER FLUID PUMPING SYSTEM

Filed Oct. 13, 1959 11 Sheets-Sheet 9

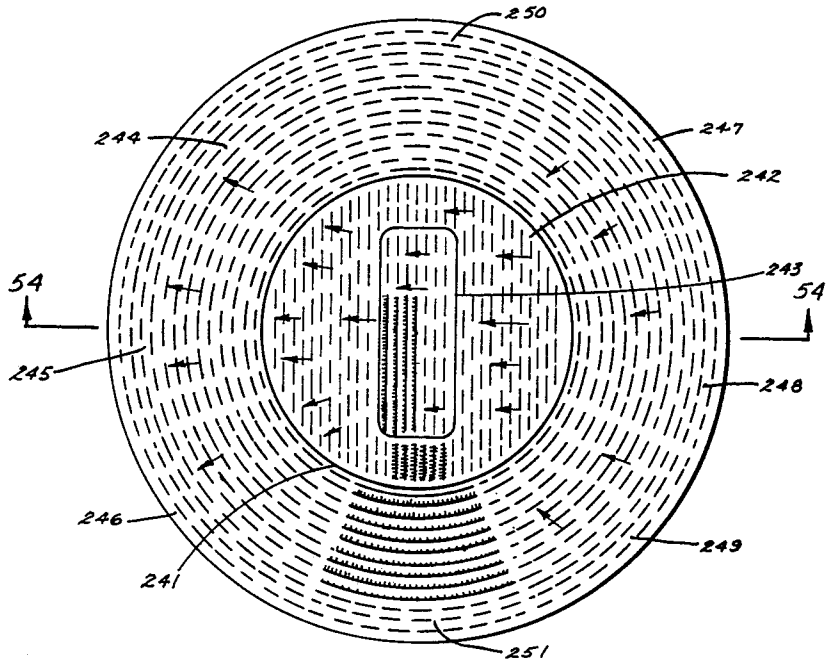

FIG. 53

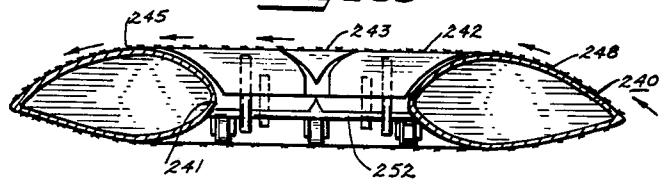

FIG 54

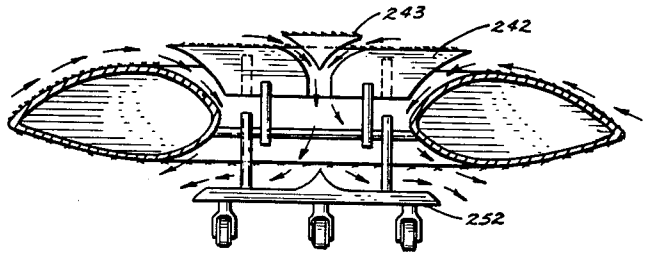

FIG. 55

INVENTOR.
GILMAN A. HILL
BY McGrew & Edwards
ATTORNEYS

305 || @HighEarthOrbit_ linktr.ee/Grider2

IONIZED BOUNDARY LAYER FLUID PUMPING SYSTEM

Filed Oct. 13, 1959 11 Sheets-Sheet 10

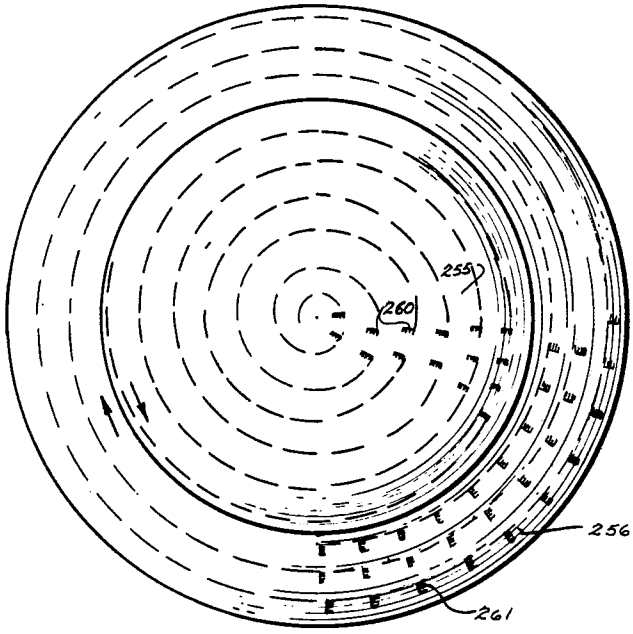

Fig. 56

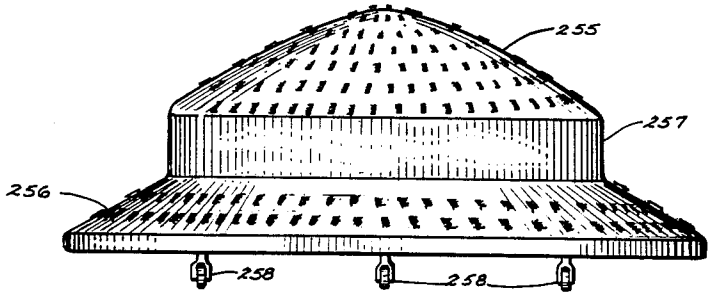

Fig. 57

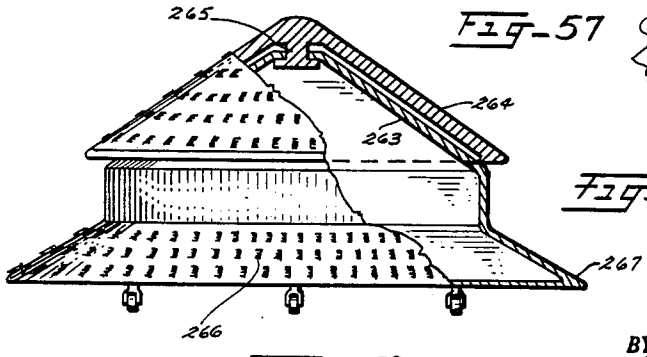

Fig. 59

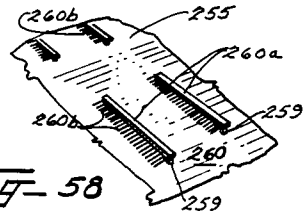

Fig. 58

INVENTOR.
GILMAN A. HILL
BY
ATTORNEYS

June 25, 1963 G. A. HILL 3,095,163

IONIZED BOUNDARY LAYER FLUID PUMPING SYSTEM

Filed Oct. 13, 1959 11 Sheets-Sheet 11

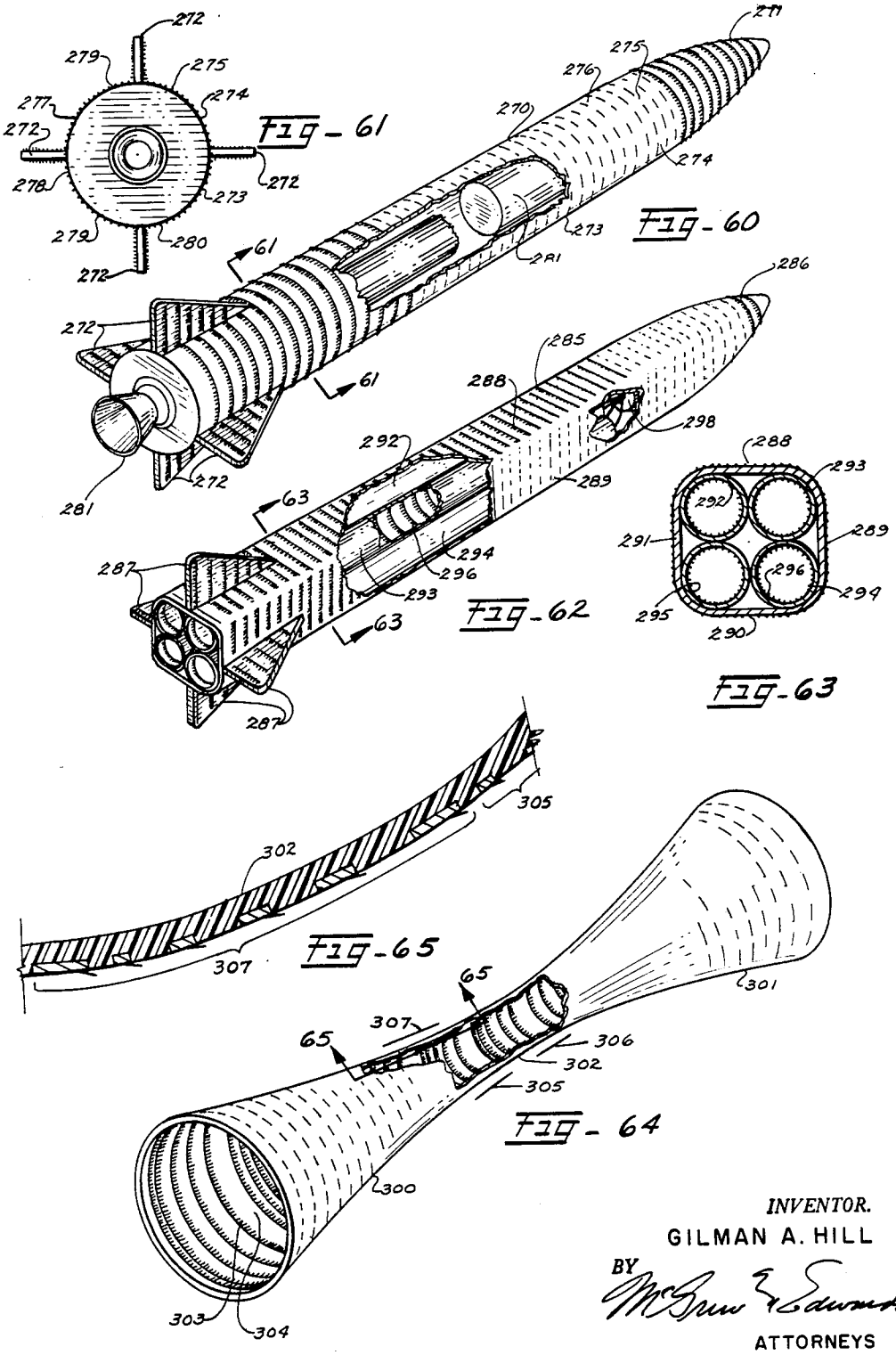

INVENTOR.
GILMAN A. HILL
BY
McGrew & Edwards
ATTORNEYS

307 || @HighEarthOrbit_ linktr.ee/Grider2

United States Patent Office

3,095,163

Patented June 25, 1963

3,095,163
IONIZED BOUNDARY LAYER FLUID PUMPING SYSTEM

Gilman A. Hill, Englewood, Colo., assignor to Petroleum Research Corporation, Denver, Colo., a corporation of Colorado

Filed Oct. 13, 1959, Ser. No. 846,210
16 Claims. (Cl. 244—12)

This invention relates to methods and mechanisms for moving air, water and other fluids and to the propulsion and sustentation of vehicles and other bodies in fluid media, and particularly to mechanisms having no moving parts and which are effective to move fluids at controlled velicoties, and it relates further to an improved method and system for utilizing ambient air or other fluid medium to propel a vehicle or other body and to sustain it in position in such fluid medium.

Various types of propulsion systems have been provided heretofore for the purpose of effecting high velocity movement of fluids and for driving vehicles on land, on and under water, and in the air. Among these systems are propellers such as employed on ships and aircraft and also reaction devices such as jets and rockets. All of these systems require very substantial amounts of power to overcome losses, particularly those produced by turbulence of the ambient fluid medium created by the propulsion system. This power requirement is a substantial disadvantage, particularly in the design of aircraft, a large portion of the carrying capacity of the aircraft being required for the engine or prime mover and its fuel supply. Furthermore, the maneuvering of the aircraft and submarines in use today has required rudders, elevators, and other control surfaces which react with the ambient fluid to control the movement of the vehicle by changing the direction of travel along a gradual curved path. A change of elevation is achieved by a gradual inclined climb or glide path. The guidance of rocket driven missiles and similar equipment requires the use of auxiliary rockets. Helicopters and other hovering aircraft have generally required complex rotating propeller or wing structures and have been made capable of hovering at a sacrifice of efficiency, maneuverability and speed.

It is an object of the present invention to provide a new system for propelling vehicles and other bodies through fluid media.

It is another object of this invention to provide a new sustentation system for aircraft and submarines.

It is another object of this invention to provide an improved system and method for utilizing electric fields to produce flow of fluid media.

It is another object of this invention to provide a system and method for utilizing electric fields to effect the sustentation and propulsion of vehicles or other bodies in fluid media.

It is another object of this invention to provide a new propulsion and sustentation system for vehicles operating in fluid media and which affords a higher degree of control and maneuverability than has heretofore been available.

It is another object of this invention to provide an improved propulsion system for aircraft, submarines, and the like having no external moving parts.

It is another object of this invention to provide an improved system for effecting high velocity continuous movement of streams of matter to produce reactive thrust and which may be employed as a propelling force in vehicles or other bodies.

It is another object of this invention to provide an improved power system for propelling vehicles or other objects through the atmosphere and through space.

It is another object of this invention to provide an improved vehicle capable of hovering in a fluid medium.

It is a further object of this invention to provide an improved aircraft capable of controlled movement in any direction without turning or banking or other change of orientation.

It is a further object of this invention to provide an improved system for facilitating the flow of fluids through ducts, wind tunnels and the like with minimum turbulence.

It is a further object of this invention to provide an improved propelling or force generating system for machines and power equipment for applying controlled forces in any desired direction.

Briefly, the method of producing fluid flow which is employed in carrying out the objects of this invention in the various illustrated embodiments thereof comprises the creation and utilization of an electric field so that progressively changing or different potentials are produced and so that charged particles existing or supplied near the field are propelled along the field and induce a corresponding flow of the fluid medium in which the electric field is produced. The fluid medium may be made to move in laminar or surface fluid flow so that it may be utilized to produce pressure differentials sufficient to effect sustentation and propulsion of vehicles or other bodies in the medium or in other applications, for example, to facilitate the flow of the ambient medium or other fluid through pipes, ducts, or the like in which the electric fields are produced.

In one embodiment of the invention in the aeronautical field, an aircraft of conventional airfoil design is provided with a propulsion equipment which employs charged electrodes to accelerate and drive ions or other charged particles, thereby producing a reactive thrust on the electrodes and also creating high velocity streams of air and resulting low pressures along the adjacent airfoil surfaces. These pressures, produced in accordance with Bernoulli's theorem, are sufficiently low to effect sustentation and movement of the aircraft by providing a differential pressure between the upper and lower wing surfaces of the aircraft. The airfoil surfaces are convexly curved, and the electrode elements are arranged in a plurality of parallel rows approximately perpendicular to the longitudinal axis of the aircraft, the rows of electrode elements being spaced from one another at predetermined intervals along a line or zone extending back from the leading edge along the curve of the surface. Each electrode element comprises a rod or bar having a multiplicity of individual electrode points directed along the curve toward the adjacent row in the direction of air flow. All the points are positioned to lie in substantially the same plane, generally parallel to and either spaced somewhat from the airfoil surface or mounted flush with the airfoil surface. An electric power supply system is carried by the aircraft and may include an electric generator driven by any suitable power source, for example, an internal combustion engine. Alternating current excitation of the electrodes is presently preferred although for some applications a direct current system may be employed; in either case the electrodes in successive rows are charged in such a manner as to create an electric potential gradient or electric field through which ions or other charged particles are accelerated to attain high velocities in moving over the rows of electrodes. When alternating current excitation is employed the operation of the system is analogous to that of a squirrel cage induction motor, a predetermined phase difference being maintained between the rows of electrodes, and the system being operated to propel the masses of charged particles at a resonant velocity sufficient to maintain the desired air flow velocity. When direct cur-

308 || @HighEarthOrbit_ linktr.ee/Grider2

rent is employed, each row of electrodes is at a higher potential than the preceding row in the direction of air movement, and consequently between the first and last rows a very high potential, equal to the sum of the voltages between each row, must be employed. Whichever excitation system is employed, the ions or charged particles move successively from one row to the next and create an aura or "electric wind" by dragging air along the airfoil surface. By providing a sufficiently high potential gradient at the pointed electrodes, corona discharge is obtained, thereby creating an abundance of ions and greatly facilitating the driving of the air along the airfoil surface. Substantially streamline laminar or surface layer flow of air is obtained by the system of the present invention which thus avoids much of the turbulence and attendant losses occurring in conventional aircraft propulsion systems. Forward movement of the aircraft is produced by the reactive thrust on the electrodes and by selective excitation of electrodes on forwardly facing surfaces and may be increased by producing a "nose-down" attitude of the plane. Hovering of the aircraft can be attained by a "nose-up" attitude, giving a vertical vector resultant from the vector sum of the reactive thrust on the electrodes and the force created by the Bernoulli theorem reduction of pressure on the airfoil surface.

The convexly curved surfaces of airfoils and other vehicle walls may be employed to minimize the capture and loss of charged particles by the electrodes; this is accomplished by orienting the electrodes to drive the particles around the curved walls thereby producing centrifugal forces which urge the particles away from the curved surface. These centrifugal forces are generally in the same direction as and supplement the pressure produced forces or lift.

In other embodiments of the invention the vehicle body may be in the form of upper and lower cones or may comprise upper and lower flattened dome-like portions and thus take the form of the popular conception of the "flying saucer"; and, furthermore, the vehicle may be operated under water as well as in the air. The electrode elements in these embodiments may be arranged along circular paths, in spiral paths from the center outward, or from the circumference inward, or along any other straight or curved line or other configuration. In other applications, electrodes of any configuration such as needle-pointed combs or flat plates may be mounted above, at, flush with, or just under the airfoil surface, and are insulated from any electrical conducting portion of the airfoil structure and from each other. The pointed electrodes are employed when ions are to be created by corona discharge or gaseous ionization. A very thin coat of protective insulating material may be applied to portions of the electrodes in some applications to minimize corrosion or other deterioration of the metal and to minimize ion capture.

In another embodiment a vehicle similar to those referred to above is provided with one or more elongated rearwardly open tubes or passages the inner walls of which are provided with electrodes for discharging masses of charged particles through the tubes, such particles being supplied from the vehicle near the forward end of the tube. This vehicle may be flown through the atmosphere toward outer space by excitation of the electrodes on the outer surface and then the acceleration of the charged particles through the tubes can be employed to secure a reactive thrust for propelling the vehicle in rarefied atmosphere and in space. In another embodiment a rocket, with conventional propulsion is provided with a system embodying the invention to lift it to high altitudes before the rocket power is applied to propel it into and through outer space.

The fluid flow producing system of this invention is also useful in producing flow of liquids or other fluids in ducts and may be used in one embodiment for propelling air through a wind tunnel or the like at high velocities and with a minimum of turbulence.

The features of novelty which characterize this invention are pointed out with particularity in the appended claims. The invention itself, however, both as to its organization and method of operation, together with further objects and advantages thereof, will best be understood upon reference to the following description taken in connection with the accompanying drawings in which:

FIG. 1 is a perspective view of a conventional aircraft provided with a sustentation and propulsion system embodying the invention;

FIG. 2 is an enlarged sectional view through the line **2—2** of FIG. 1;

FIG. 3 is a greatly enlarged perspective view partly in section of a portion of the wing adjacent the section FIG. 2;

FIG. 4 is a detailed view greatly enlarged of the section of the wing of FIG. 3 along the line **4—4**;

FIG. 5 is a schematic diagram of an alternating current excitation system for use with the invention;

FIGS. 6, 7 and 8 are graphs illustrating three forms of alternating potential wave suitable for use in the systems of the invention;

FIG. 9 is a schematic view of another alternating current excitation system embodying the invention;

FIGS. 10, 11 and 12 are graphs illustrating wave forms similar to those of FIGS. 6, 7 and 8 respectively and resulting from operation of the system in FIG. 9;

FIG. 13 is a schematic diagram of a direct current excitation system;

FIG. 14 is an enlarged view of the wing section similar to that of FIG. 2 partly broken away and illustrating another embodiment of the invention;

FIGS. 15, 16 and 17 are diagrams illustrating the characteristics of operation of the system when applying alternating current wave forms as shown in FIGS. 6, 7 and 8 respectively;

FIG. 18 is a schematic diagram illustrating another embodiment of the excitation system of the invention;

FIG. 19 is a graph illustrating the characteristics of operation of the system of FIG. 18;

FIG. 20 is a voltage curve applicable to a portion of the system of FIG. 18;

FIG. 21 is a sectional view of another electrode arrangement suitable for operation with the system illustrated in FIG. 18;

FIG. 22 is a sectional view through a line of electrodes for illustration of another embodiment of the invention;

FIG. 23 is a diagrammatic view of the transformer connection for the electrodes of FIG. 22;

FIG. 24 is a graph illustrating the vector relationship of the potentials produced by the transformer of FIG. 23;

FIG. 25 is a schematic diagram of a system providing speed changing control;

FIG. 26 is a graph showing a potential wave form of the excitation system for the system of FIG. 25;

FIGS. 27 and 28 are graphs illustrating high and low speed characteristics of the control;

FIG. 29 is a schematic diagram illustrating another excitation system and its characteristics;

FIG. 30 is a diagrammatic illustration of the current generator for use in the system of FIG. 29;

FIG. 31 is a schematic diagram illustrating another embodiment of the excitation system of the invention;

FIG. 32 is a graph including a set of curves illustrating the pressure and velocity characteristics of the systems of the invention;

FIGS. 33 and 34 are plan and sectional elevation views, respectively, showing the construction of one form of electrode suitable for use with the systems embodying the invention;

FIGS. 35 and 36 are plan and sectional views, respectively, of another form of electrodes suitable for operation in systems embodying the invention;

309 || @HighEarthOrbit_ linktr.ee/Grider2

FIGS. 37 and 38 are diagrammatic views illustrating the electric fields existing during excitation of the electrodes of FIGS. 33 and 35;

FIGS. 39 and 40 are plan and sectional elevation views illustrating electrodes and switches therefor for use with reversible fluid flow systems of the invention;

FIGS. 41 and 42 are plan and sectional elevation views illustrating another type of reversible electrode;

FIGS. 43 and 44 are plan and sectional elevation views, respectively, of a reversible electrode system using electrodes illustrated in FIGS. 41 and 42;

FIGS. 45 and 46 are plan and sectional elevation views, respectively, of a still further electrode arrangement;

FIG. 47 illustrates a device embodying the invention and designed for lifting and moving objects;

FIG. 48 is a perspective view of an aircraft embodying the invention;

FIGS. 49 and 50 are a partial plan and an elevation view, respectively, of another vehicle embodying the invention;

FIGS. 51 and 52 are plan and elevation views of another embodiment of the invention;

FIGS. 53 and 54 are plan and elevation views, respectively, of another vehicle including a further embodiment of the invention;

FIG. 55 is another view through the same section as FIG. 51, and illustrating a shifted position of control elements of the vehicle;

FIGS. 56 and 57 are plan and elevation views of another aircraft illustrating a further embodiment of the invention;

FIG. 58 is an enlarged detail view of several of the electrodes employed in the embodiment of FIGS. 56 and 57;

FIG. 59 is an elevation view, partly in section, illustrating an aircraft embodying a further modification of the invention;

FIG. 60 illustrates a vehicle embodying the invention which is adapted for flight through the atmosphere and in outer space;

FIG. 61 is a sectional view along the line **61—61** of FIG. 60;

FIG. 62 is a perspective view similar to FIG. 60 illustrating another embodiment of an air and space craft;

FIG. 63 is a sectional elevation view along the line **63—63** of FIG. 62;

FIG. 64 is a perspective view illustrating a wind tunnel embodying the invention; and

FIG. 65 is an enlarged sectional view showing the electrodes of the tunnel of FIG. 64.

Referring now to the drawings, the aircraft illustrated in FIG. 1 is a conventional airplane except that instead of the usual propeller or jet-type propulsion system it is provided with a sustentation and propulsion system embodying the present invention. The aircraft comprises a body **15**, a pair of main wings **16** and a tail assembly **17** having horizontal and vertical airfoil members **18** and **19**, respectively, and including the movable elevator and rudder control surfaces of conventional aircraft.

The power plant or system includes an electric generating and excitation system for producing electric potential fields adjacent selected portions of the airfoil surfaces. The electric fields are produced in a manner such that they propel charged particles along the wing surface and create relatively high velocity flow of air in lamina or layers over these areas and thereby produce a reduction in pressure in accordance with Bernoulli's theorem, an increase in velocity being accompanied by a corresponding decrease in pressure in an amount which is proportional to the difference between the squares of the original and final velocities. The forces produced by this reduction in pressure are accompanied by two additional forces, one a reaction force produced by the acceleration of the charged particles, and the second, a centrifugal force of the charged particles traveling over curved portions of the airfoil surfaces. In the drawing there are shown on the main wings **16** two main electrode areas **20** and **21** each provided with a multiplicity of parallel rows of electrodes, and two control areas **22** and **23** each comprising similar rows of electrodes and located near the ends of the wings beyond the areas **20** and **21**, respectively. The tail assembly is provided with similar areas of electrodes **26** and **27** on either or both of the stationary and movable horizontal airfoil surfaces and with additional electrode areas located on other surfaces such as on the stationary and movable vertical tail areas, as illustrated for the left-hand tail surface at **28** and on the undersides of the main wing; the underside of the tail assembly and the upper and lower surfaces of the fuselage may also be provided with sets of electrodes (not shown).

As indicated above, the sustentation and propulsion of the aircraft are secured by the electrical excitation of the electrodes in a manner to produce a high velocity flow of ions or other charged particles to induce a flow of air at high velocity over the surface of the airfoil adjacent the electrodes so that lift is produced in accordance with Bernoulli's principle. The forward propulsion of the airplane is effected by a combination of the forward reactive force produced by the rearward acceleration of the charged particles and of forward components of the lift on forwardly facing areas of the airfoil surfaces. The forward components of the lift may be increased by forward tilting of the aircraft to maintain a "nosedown" attitude. Turning of the aircraft may be accomplished by the conventional controls or by selectively adjusting the relative forces produced by excitation of the sets of control electrodes **22**, **23** and **28**, for example. Thus, a decrease of the relative lifting forces produced by differential excitation of one of the sets **22** and **23** over the other causes the wing to dip downwardly on the side of the set having the lesser lift.

The arrangement of the electrodes on the airfoil surfaces is illustrated in detail in FIGS. 2, 3 and 4. The structural features of the wing section shown in FIG. 2 have been shown somewhat diagrammatically and the size of the electrodes has been exaggerated for purposes of illustration, and further the number of electrodes has been greatly reduced for the same reason. This specific wing construction has been illustrated by way of example and any other construction may be employed which provides the required strength together with the insulating surface and suitable provision for mounting the electrodes and supplying the power thereto. It will be understood from the following detailed description that the number of electrodes, their configuration, spacing, and relative positions are to be determined in accordance with the particular electrical excitation system to be employed. FIG. 2 illustrates a section through the left main wing **16** and shows the electrodes of the set or group **20**, the individual electrodes being indicated at **30**. The lower wing surface is provided with a similar set of electrodes **31**, the individual electrodes being indicated at **32**. The wing as illustrated in FIG. 2 comprises an outer wall or airfoil which has been illustrated as constructed of insulating material **33** secured on metal cross braces or ribs **29** having openings or passages **29*a*** therethrough.

The structural features of the outer wall or skin **33** are shown in the detailed view, FIG. 3. As shown in this figure, the skin or outer wall of the wing is built up as a lattice of metal rods or bars connected at selected points where they cross to provide a rigid metallic grid which is embedded in an insulating material; the insulating material which, for example, may be a plastic provides a smooth airfoil surface. Rows or series of points project upwardly and rearwardly from each of the electrodes, as indicated at **34** in FIG. 4. The elements of the metal grid work comprise the electrodes **30** which are elongated bars extending flush with the upper surface and a plurality of cross bars designated alternately as **35*a***

310 || @HighEarthOrbit_ linktr.ee/Grider2

and 35*b* and extending across the under surface of the wall section and flush therewith. The electrodes **30** are connected alternately to the bars 35*a* and 35*b* which in turn are to be connected to different terminals of the excitation system. The connections between the electrodes **30** and the alternate bars 35*a* and 35*b* are made by cross pieces **36** and **37**, respectively. The construction of the wing thus provides a durable wall while at the same time providing the electrical connections for excitation of the electrodes **30**. As indicated in FIG. 3, the points **34** of the electrodes **30** are arranged in spaced rows along each electrode and all of the points are oriented in the same direction and are equally spaced from the adjacent electrode.

The construction of the lower wing surface is the same as that of the upper surface and the electrodes **32** are provided with points **38**, all pointing outwardly and downwardly in essentially the same manner as the points **34** of the upper wing surface. It will thus be seen that the points of the electrodes are directed rearwardly and it is this arrangement that makes use of the reactive forces produced against the electrodes during excitation thereof and acceleration of charged particles to provide a forward thrust on the aircraft. During the operation of the aircraft the sets of electrodes on the lower surfaces may be operated for control purposes. For example, a decrease in the lifting force on the upper surface may be accompanied by an increase in the lower surface, tending to dip the wing more rapidly. The excitation of the lower surfaces may also be employed to execute a rapid descent without picking up excessive forward speeds.

The high velocity flow of air over the wing surfaces is produced by electrical excitation of the rows of electrodes. The air is driven or dragged along the wing surface normal to the rows of electrodes by ions or other charged particles which are propelled across the rows of electrodes by differences in potential between adjacent rows. The continuous flow of charged particles over the surface and the resulting surface layer flow of air minimizes turbulence and the attendant losses occurring in conventional aircraft propulsion systems. The charged particles employed in the operation of the system may be supplied or produced in various ways, and in the presently preferred embodiments of the invention are produced by ionization of the air or other fluid adjacent the airfoil surfaces by the excitation of electrodes with the voltage pulses of sufficiently high intensity to produce ionization. In this manner, clouds or masses of ions may be produced closely adjacent the series of electrodes. The high velocity flow of air is thus produced in a layer immediately adjacent the air-foil thereby reducing the skin effect as compared with that present in the operation of conventional aircraft.

The preferred excitation systems employ periodically changing electric potentials, and these systems are designated herein as alternating potential systems. The system which is illustrated in FIG. 5 is an example of the alternating potential system and comprises a prime mover such as an internal combustion engine indicated at **40** and connected through a variable speed transmission **41** to an alternating current generator **42**. The frequency of the alternating current may be varied by changing the speed of the generator through operation of the control **41** which changes the relative speeds of the engine and generator shafts. The output of the generator **42** is connected to a primary winding **43** of a variable voltage transformer **44**. The secondary winding of the transformer indicated as a voltage step-up winding **45** is connected to supply lines **46** and **47**. These supply lines are connected to alternate rows of electrodes in the various sets or groups of electrodes and, by way of example, have been shown as connected to bus bars **48** and **49**, respectively, associated with the electrodes **30** of the group **20**. The individual rows of electrodes **30** in group **20** which are connected to the bus bar **48** are designated as 30*a* and those connected to the bus bar **49** as 30*b*. The additional sets of electrodes on other wing surfaces may be connected to the supply lines **46** and **47** through additional switches indicated at **51**, **52** and **53**. By connecting alternate rows of electrodes in this manner and electrodes 30*a* and 30*b* are maintained 180 degrees out of phase with respect to one another. Each pulse of ions or other charged particles will be repelled from the electrode that has a like charge and will be attracted toward the next electrode that has an opposite charge. At resonance each pulse of ions will flow across or pass the electrode attracting them when that electrode changes polarity, and the charged particles are further accelerated in the same flow direction by repulsion from this electrode and attraction toward the next electrode which is now of opposite polarity. If the accelerating voltage gradient between the electrodes and the frequency are properly adjusted, these pulses of ions will flow from one electrode to the next in synchronism or resonance with respect to the changing electrode potentials. This resonance may be attained by adjusting either the accelerating voltage gradient or the frequency. When resonance is achieved a minimum number of ions or charged particles will be captured by the electrodes thereby minimizing the current loss and increasing the efficiency of operation. This current loss may be further decreased by decreasing the width of the ion pulse so that more of the ions can cross the electrode while there is essentially no electric field between electrodes. The effectiveness of the alternating potential excitation including the minimizing of current losses may be controlled by the selection of the wave form of the alternating potential and also by various designs of the configuration and dimensions of the electrodes. Three different wave forms are indicated in FIGS. 6, 7 and 8. The wave form of FIG. 6 is essentially a sine wave and it will be noted that the duration of the portion of the wave when the voltage is substantially zero is very short; a pulse of this form, however, may be employed when the electrode has substantial width in the direction of fluid flow thus placing a substantial portion of the moving ions over a near zero potential gradient zone during the change-over of electric field direction. Also this sine wave form can be used without this objection and without these wide electrode configurations in some multiphase traveling wave systems. The square wave form of FIG. 7 has an advantage of maintaining higher potential for a greater portion of the cycle and makes possible the imparting of greater energy to the masses of moving charged particles. In view of the abrupt change from one square wave peak to the other, it is desirable to provide a substantial width of electrode strip over which the charged particles can coast in a near zero electric field while the field between electrodes is changing direction as in the case of the sine wave FIG. 6. In the wave form of FIG. 8 the square wave portion is followed by a substantial portion at zero potential before the reverse in polarity. This overcomes the disadvantages of the other wave forms when used in single phase excitation systems by providing a substantial period during which the electrodes are neutral giving a zero electric field and affords ready passage of the ions across the electrode without reversed propulsion on the ions arriving before or after the electric field reversal.

FIG. 9 illustrates a modified form of excitation system which is essentially similar to that of FIG. 5 but provides short duration high amplitude pulses superimposed on the alternating wave form to effect periodic higher intensity ionization of the fluid adjacent the electrodes. In this system a square wave generator **55** is connected to the line **48** through a switch **56** and impresses a square wave on the electrodes as indicated at **57**. The other side of the square wave generator **55** is connected to the ground terminal as indicated and the bus bar **49** is also grounded so that the electrodes 30*b* are connected to the opposite side of the generator. The square wave form **57** is thus impressed between the alternate electrodes in the same manner as the alternating potential is impressed on the

311 || @HighEarthOrbit_ linktr.ee/Grider2

electrodes in the circuit of FIG. 5. Additional switches **58**, **59**, **60** and **61** are provided for connecting other groups of electrodes to the generating system. In order to effect ionization of the fluid adjacent the electrode, short pulses at the same frequency as the generator **55** but of greatly increased potential are impressed on each of the half cycles of the wave produced by the generator **55**. In order to produce these pulses, a pulse generator **63** is connected to the generator **55** for synchronism therewith and is connected through a phase adjuster **64** and a line **65** to the switch **56** so that the ionization pulse is impressed on the electrodes with the square pulse **57**. The timing of the ionization pulse with respect to the square pulse may be effected by adjusting the phase adjuster **64** so that the most desirable ionization time may be selected. Ionization is effected by corona discharge during each half cycle, the resulting composite wave form being indicated at **66** and being the wave form occurring on the supply line connecting the generator **55** and the switches after the ionization pulse has been impressed on the line through the connection **65**. The high voltage or ionization pulse may be impressed on any of the wave forms indicated in FIGS. 6, 7 and 8 and the resulting wave forms are indicated in FIGS. 10, 11 and 12, respectively. The wave form of FIG. 11 is the same as that indicated at **66** in the schematic diagram FIG. 9.

A high voltage direct current excitation system is suitable for the excitation of the electrodes in some applications of the invention and an example of such generating and excitation system is illustrated schematically in FIG. 13. In this figure an alternating current generator **70** driven by an internal combustion engine **71** is connected to the primary of a transformer **72** and the secondary of the transformer, indicated at **73**, is connected to supply a full wave rectifier. The center tap of the transformer is connected to ground as indicated at **74** and the two terminals are connected through rectifiers **75** and **76** to a common output line **77**. Direct current thus appears at the output and the system is arranged to generate a high direct current voltage across a voltage dividing resistance **78** between the output **77** and a ground connection **79**. The resistance **78** is tapped at intervals and the taps are connected to a plurality of electrodes **80** mounted in an airfoil surface **81** which may be of the same construction as that employed in the aircraft in FIG. 1. It will be apparent that if the tapping arrangement is provided with equal taps the full voltage produced by the generator will be divided equally so that the electrodes will be at progressively higher potentials in equal steps.

In the operation of this system the charged particles adjacent each of the electrodes **80** and having the opposite polarity are attracted toward the next electrode because of its higher potential, and a large proportion of the particles will similarly move past the electrodes in succession because of the steadily increased potential of the electric field. FIG. 13 also illustrates the electrodes as mounted on a convexly curved surface; with this surface configuration, as the ions are moved from one electrode toward the next they are also drawn around the curved surface and this surface introduces centrifugal force in the particles and provides a force normal to the surface and supplementing the pressure produced lift.

In order to provide an increased supply of charged particles in the system of FIG. 13, a high voltage pulse generator **82** is connected to the lead **77** to introduce periodic high voltage pulses across the voltage divider **78**. These pulses are of short duration but of sufficient potential to produce corona discharge and thereby provide a supply of ions for operation of the system.

Under certain applications of the system of FIG. 13 it may be desirable to apply the ionization pulses to successive electrodes along the line of electrodes rather than impressing the ionization voltage on the first electrode in the series. In order to secure this successive application of ionization voltage, a switch **84** is provided between the generator and the voltage dividing resistance **78**. When this switch is moved to its lower position it connects a rotary switch or commutator **85** to the pulse generator **82**. The switch **85** includes an arm **86** which is rotated by a motor **87** and engages successively each of a series of contacts arranged about its circumference and connected respectively to successive ones of the electrodes **80**, the connections as illustrated being made at the same points of the divider resistance as those to which the electrodes are connected. It will be seen that as the switch **85** is rotated in a clockwise direction it connects the electrodes one after another in succession to the pulse generator so that ionization pulses appear at succesive points along the curved line and produce successive masses of ions by corona discharge along the path of fluid flow.

Under some conditions of operation of the invention it may be desirable to provide charged particles other than ions. A system arranged for this purpose is diagrammatically shown on a conventional wing airfoil in FIG. 14. The airfoil is provided with a series or group of electrodes **84** on its upper surface, these electrodes being similar to the electrodes **30** of the modification of FIG. 1. A charged particle supplying system is arranged within the airfoil or wing and comprises a charged particle gun **91** mounted adjacent the forward edge of the airfoil and having a discharge slot or outlet **92** immediately adjacent the forward or leading edge of the wing surface. The outlet **92** is arranged to discharge particles along the entire leading edge of the wing adjacent the electrode group. Any suitable fine powder or dust may be employed for this purpose. The charged particles are driven over the upper surface of the wing by excitation of the electrodes and when they reach the trailing edge pass through a slot in a metal manifold **93** provided for this purpose and are neutralized by contact with the manifold which is charged to the opposite polarity; the manifold **93** is connected to a return duct **94** through which the particles are drawn by operation of a pump **95** and are returned to a charging generator **96** through an insulating connector **97** which supplies the particles to the gun **91**. The particles thus, except for losses to the atmosphere, are returned to the system for reuse.

The operation of the excitation systems as above described is essentially the same regardless of the source of the charged particles. In a system such as that illustrated in FIG. 14 the electrodes may be in the form of flat plates such as those illustrated in FIG. 4 but with the sharp points **34** omitted since these are required only for facilitating the production of ions by corona discharge in the systems employing ions.

When alternating current excitation is employed the ions or other charged particles are accelerated to successively higher velocities by increasing the voltage gradient until they reach a resonant velocity with respect to the alternating frequency. The resonant frequency is determined by the relationship $f=V/D$ where f equals the frequency in cycles per second, V is the charged particle velocity in centimeters per second and D is the minimum distance in centimeters between electrodes which have electric potentials of the same phase relationship. The desired velocity V can be obtained by varying the average accelerating voltage gradient between electrodes within certain limits required to maintain the desired degree of ionization. The frequency can then be adjusted to obtain resonance with resulting charged particle velocity V and the minimum distance D between electrodes having the same phase relationship. Proper resonance can be obtained by varying either the voltage gradient within prescribed limits or the frequency. Frequencies in the range from 60 cycles per second to 10,000 cycles per second are desired for many electrode configurations and spacing but higher or lower frequencies may be needed for resonance in other systems. The distance "D" between electrodes having the same phase relationship may be of the order of one inch up to forty inches for many

312 || @HighEarthOrbit_ linktr.ee/Grider2

embodiments but larger or smaller distances may be used in some applications. The actual spacing between adjacent electrodes is often in the order of one-half inch to six inches but may be made larger or smaller in some applications. Voltages of the order of 2,000 volts to 20,000 volts may be applied between adjacent electrodes and total peak to peak alternating voltages of the order of 5,000 volts to 75,000 volts may be applied between electrodes having a 180 degree phase difference but in some applications larger or smaller voltage differences may be used. If the average accelerating voltage gradient needed to obtain the desired resonance velocity V is too low to produce a corona discharge then the short high voltage pulses are impressed on the alternating potential pulse to obtain the desired ionization by corona discharge.

When direct current excitation is used the charged particles are accelerated to a velocity determined in part by the voltage gradient, the average concentration of charge on each particle, the concentration of charge particles, and the viscosity of the air or other fluid medium. Each electrode element is at a higher potential than the preceding element of the series.

FIGS. 15, 16 and 17 illustrate the characteristics of the excitation systems employing the alternating potential wave forms of FIGS. 6, 7 and 8 respectively when operating at resonant velocity in conjunction with one form of electrode element. In the description of these systems the characteristic curves indicated have not included the ionization pulses which may be used in some applications if the desired accelerating voltage wave is not adequate to produce the desired intensity of ionization. In each of these figures four of the electrode elements designated **101**, **102**, **103** and **104** are indicated along the left end of the figure followed by a succession of eight vertical voltage-distance curves each showing the potentials of the four electrodes and the positions of masses of positive and negative charged particles propelled by the electrodes; the eight curves represent the voltages and the positions of the charged particles at eight equally spaced instants of time during a full cycle of the excitation wave. The excitation wave for the electrodes **101** and **103** has been indicated in each of FIGS. 15, 16 and 17 along the lower portion of the figure on a time base, the eight positions indicated being taken at instants of time designated t_0 to t_7, inclusive, along the excitation wave; the excitation wave for the alternate electrodes **102** and **104** which is not shown is identical in form but 180 degrees out of phase with the excitation wave shown. The electrodes **101** and **103** thus correspond to electrodes **30***a* in the previous diagrams and the electrodes **102** and **104** correspond to electrodes **30***b*. Alternate ones of the masses of charged particles are positively and negatively charged respectively as indicated in FIGS. 15, 16 and 17. Although the charged particles within each of the masses or clusters repel each other and tend to diffuse outwardly, these masses remain substantially intact as they are propelled past electrodes **101**, **102**, **103** and **104**.

FIG. 15 illustrates the resonant velocity characteristics when the electrodes are excited by a sine wave. The first curve at the right of the electrodes and designated t_0 represents the instant when the excitation wave on electrodes **101** and **103** is at its maximum positive potential and electrodes **102** and **104** are maximum negative. The electric field potential curve plotted against the distance along the series of electrodes comprises flat portions of the length of the electrodes and sloping portions connecting the positive and negative potential value of the adjacent electrodes. The wide electrode consisting of electrically conducting material causes the electric field potential to remain essentially constant over the width of the electrodes thereby producing the flat portion of the curve. At the instant t_0 the positive charged particles are moving from **101** toward **102** and from **103** toward **104** along a decreasing potential field and negative charged particles are moving from **102** toward **103** along an increasing potential field. The mass of positive charges is attracted toward the negative electrode and repelled from the positive electrode and the mass of negatively charged particles is attracted toward the positive electrode and repelled from the negative electrode. At the end of the interval of time between t_0 and t_1 the masses of particles have moved to their positions shown in curve t_1 and it will be noted that the potentials of the electrodes have been reduced to the values at t_1 on the excitation sine wave extending along the lower portion of the figure. The particles continue to move and at the instant t_2 they are in the position shown in curve t_2. At this instant the potentials are zero on all electrodes and the polarity of the electrodes is about to change. In the next curve at time t_3 the potentials of the electrodes and the direction of the electric field have been reversed to give the values shown in curve t_3, the electrodes **101** and **103** being negative and the electrodes **102** and **104** positive. The positive charges which were propelled from **101** toward **102** at the instant t_0 are now adjacent or past **102** and are being propelled from **102** toward **103** by this reversed electric field. Likewise the negative charged particles which were propelled by the electric field from **102** toward **103** at time t_0 will now have moved to a position above or past electrode **103** and the reversed electric field will propel them from **103** toward **104**. The potentials continue to increase with time along the sine wave excitation curve until at the time t_4 the electrodes have opposite potentials of equal magnitude to those shown at t_0. The progress of the masses of charged particles may be traced through successive increments of time to t_5, t_6, t_7 and return to t_0 on the curves labeled accordingly. It will be noted that the electrodes excited in this manner are electrically analogous to the loops of a standing wave with the nodes of the analogous standing wave being located between the electrodes. When this excitation system has the proper relationship between accelerating voltage, electrode spacing, and frequency such as to propel the mass of charged particles at the correct velocity to always pass over each wide electrode as it changes polarity and enters the electric field between each pair of electrodes when that field is oriented in the direction to further accelerate the charged particles movement, then resonance conditions are established. This periodic kick or acceleration given the charged particles as they are propelled through the electric field between electrodes when resonance conditions are established produces what is called the "traveling wave effect." This means that the charged particles are progressively propelled along the desired flow path giving a propulsion effect similar to that of a traveling wave.

It should be noted that under most conditions more negative ions are produced by the corona discharge than positive ions. The higher concentration of charges in the mass or cluster of negative ions will cause it to accelerate more rapidly than the masses of positive ions. When this unbalanced condition exists, the system should be tuned for resonance with the dominant mass of negative ions.

FIG. 16 shows the same electrodes as those illustrated in FIG. 15 but with a square wave excitation impressed on the electrodes. In the square wave form as illustrated at the bottom of FIG. 16 the portion passing through the zero between maximum positive and maximum negative is relatively short and steep and the time intervals have been selected so that all the instants t_0 through t_7 are at maximum potentials. The operation of the system in moving the positive and negative charged masses is essentially the same, however, and can be followed in the same manner. The first two time intervals t_0 and t_1 occur during the first positive flat top portion of the wave and the polarity of the wave changes during the period between t_1 and t_2 thereafter t_2, t_3, t_4 and t_5 are all

313 || @HighEarthOrbit_ linktr.ee/Grider2

instantaneous times during the flat top portion of the negative going wave. This is then followed by t_6 and t_7 occurring at instants during the following positive portion of the wave and t_0 is then repeated as the start of the next cycle. It will be understood that these positive and negative portions of the wave have reference to the excitation of the electrodes **101** and **103** and that the electrodes **102** and **104** which are connected to the opposite side of the generator are at opposite potentials. When the proper relationship is established between the accelerating voltage, electrode spacing and frequency to achieve resonance, then the "traveling wave effect" will propel each of the masses of charged particles progressively along the series of electrode elements. As a result of the square wave form the masses of charged particles are propelled more effectively in the arrangement of FIG. 16 because the potentials are maximum for a greater length of time in each half cycle as compared with the arrangement shown in FIG. 15. Some improvement may be obtained by decreasing the magnitude of the excitation voltage wave to a value lower than that required for ionization and then superimposing a higher voltage ionization pulse or series of pulses over a portion of each half cycle of this wave.

In order to decrease still further the loss of ions by capture or neutralization, an excitation arrangement such as shown in FIG. 17 may be employed; in this arrangement a flat top wave form is used which has a period of zero potential between the positive and negative flat top portions of the waves. In FIG. 17 at the instant t_0 the masses of particles are in essentially the same positions and the electrodes are the same potential as in FIGS. 15 and 16. From t_0 to t_1, the electrode potentials remain unchanged but the particles have moved forward toward the next adjacent electrodes; the potential thereafter changes to zero, and during the subsequent period including the instants t_2 and t_3 the potential remains at zero while the masses of charged particles coast forward. Between t_3 and t_4 the polarities of the several electrodes are reversed, as shown in curve t_4; masses of positive charges are now being attracted toward the electrodes **101** and **103** which now have a negative potential and masses of negative charges in a similar manner being attracted toward the electrodes **102** and **104** and repelled by the opposite electrodes. On passing from time t_5 to t_6 the polarities again fall to zero and are maintained zero during the subsequent period including the instants of time t_6 and t_7, after which they are again reversed and return to the same polarities as at t_0.

It will be apparent from the foregoing that the movement of charged particles over a series of electrodes as indicated in FIGS. 15, 16 and 17 may be controlled by controlling the configuration and width of the electrodes and by controlling the wave form of the exciting potential.

The electrode excitation system shown in FIG. 18 employs an alternating current transformer **106** having a primary connected to a suitable source of alternating current and a step-up secondary **108** which is tapped and has its output terminals connected to a series of electrodes indicated as e_1 to e_{16}, inclusive; these electrodes have been indicated as of circular cross section with corona discharge points facing toward the right. The two end terminals of the secondary winding **108** are connected to two separate groups of electrodes, the first terminal indicated at **109** being connected to the electrodes e_2 through e_6 and the other terminal indicated at **110** being connected to the electrodes e_{10} through e_{14}. All of the electrodes within each of the respective groups are thus maintained at the same potential during the operation of the system, this potential being the alternating potential at the respective end terminals of the transformer secondary. Six variable taps are employed in the secondary as indicated at **111**, **111***a*, **112**, **113**, **114** and **114***a*; the taps **111** and and **111***a* are connected to the electrodes e_1 and e_7, respectively, and the taps **114** and **114***a* to electrodes e_9 and e_{15}, respectively. The inner taps **112** and **113** are connected, respectively, to the electrodes e_8 and e_{16}. It will be seen that the connections provide two main groups of electrodes one from e_1 to e_8 and the other from e_9 to e_{16}. During the operation of the system the alternating potential varies so that in a complete cycle the electrodes of the first group vary in voltage from a maximum positive voltage to a maximum negative and back to maximum positive, while the electrodes of the second group vary in exact opposite phase from the maximum negative voltage to a maximum positive and back to a maximum negative. This variation in potential along the series of electrodes at eight instants of time during each cycle is illustrated as curves marked t_0, t_1, t_2, t_3, t_4, t_5, t_6 and t_7 on the graph FIG. 19. In these curves, the distance along the electrode line of FIG. 18 is plotted along the x-axis the voltage is plotted along the y-axis. The voltage wave form used in this example is shown as a graph of voltage against time in FIG. 20. The instants of time t_0 through t_7 and back to t_0 and the corresponding voltage applied to electrodes e_2 to e_6 are indicated on this graph. In some applications, other wave forms can be used advantageously. In the circuit FIG. 18 it will be noted that the first electrode e_1 is connected to the tap **111** so that its voltage is below maximum at the instant t_0 when the voltage on the electrodes e_2 through e_6 is maximum. Following the curve of voltage against distance at the instant t_0 in FIG. 19 it will be noted that the group of electrodes e_2 through e_6 is at a maximum positive potential and that electrodes e_7 and e_8 have successively lower positive potentials. Electrode e_9 has a negative potential and electrodes e_{10} through e_{14} have successively less negative voltage and the next electrode in line (not shown) would have the same potential as e_1. As the voltages fall to the values at t_1 in the graph **20** the curve t_1 represents the voltages along the electrode line, all of which are of course less than the voltages at t_0. The voltages then continue to fall to the point t_2 at which the curve of FIG. 20 reaches the zero axis and the electrode potentials are represented by the center or reference line of FIG. 19. The voltages then become negative on the first group of electrodes e_1 to e_8 and positive on the second group e_9 to e_{16} and increase until the time t_4 when the voltages represented by the curve t_4 are the maximum negative voltages for the first group of electrodes and the maximum positive for the second group; the voltages then reverse again so that the voltages at the instants of time t_5, t_6 and t_7 are respectively the same as those existing at t_3, t_2 and t_1 but the direction of voltage change with time is opposite. And finally the voltages return to their values at t_0. It will be noted that this excitation system provides an arrangement whereby the voltages in one group e_1 through e_8 are changing with time oppositely with respect to the voltages of the second group e_9 through e_{16}, the zero voltages at all times occurring between the electrodes e_8 and e_9 and between the electrode e_{16} and the next electrode (not shown). A similar zero point exists at the left end of the graph which has not been illustrated. This system thus provides an alternating potential excitation along the series of electrodes which is analogous to a standing wave where the electrode groups e_2 through e_6 and e_{10} through e_{14} are electrically comparable to standing wave loops and the nodes occur between electrodes e_8 and e_9 at approximately time t_0 and between e_{16} and e_1 of the next series. By way of example, a mass of positively charged particles coasting through the nearly zero potential field above the group of electrodes e_2 through e_6 and emerging into the electric field from e_6 to e_7 to e_8 to e_9 to e_{10} will be given a kick or acceleration toward the right along the electrode line by this high electric field strength. As the charged particles pass electrode e_{10} they enter a near zero po-

314 || @HighEarthOrbit_ linktr.ee/Grider2

tential field extending from e_{10} to e_{14} where they can coast with essentially no electrical forces. If the system is tuned for resonance, the direction of the electric field will be reversed (time t_2 to t_3) by the time the first portion of the mass or cluster of positive charged particles emerge from the zero potential field between e_{10} and e_{14} and enter the electric field between e_{14} and e_2 of the next electrode series (not shown). From time t_3 to t_5 the mass of positive charged ions will pass through this electric field from e_{14} through e_2 and then coast through the zero field area above the electrodes e_2 through e_6 of the second series of electrodes. During this same interval of time from t_3 to t_5 a mass or cluster of negative ions will be kicked or accelerated through the electric field from e_6 toward e_{10}; and in subsequent time they coast through the near zero electric field area from e_{10} to e_{14}. If some of these negative ions arrive at e_{14} slightly before the electric fields are reversed at time t_6 they will enter an adverse electric field beyond e_{14} which will slow down the high speed lead ions and cause them to be bunched together with the rest of the main cluster or mass of ions. The proper adjustment of the tap positions **113**, **114**, **111** and **112** can shape the electric field to facilitate clustering these ions into a higher concentration, and thereby minimize diffusional losses. Also the length of the coasting path between e_2 and e_7 and between e_{10} and e_{14} can be adjusted to minimize losses and to achieve improved performance.

If the quantity of negative ions produced by the corona greatly exceeds the quantity of positive ions, then the system should be tuned predominantly for resonance with the masses or clusters of negative ions. Resonance is achieved when the excitation voltage, the distance between electrodes, the number of electrodes in a complete cycle, and the frequency are adjusted so that each mass or cluster or ions emerge from the coasting area into the strong electric field area at the proper time to receive a kick or acceleration in the direction of desired flow along the series of electrodes. When this resonance is achieved, then the resulting "traveling wave effect" will propel each of the masses of charged particles progressively along the series of electrode elements.

FIG. 21 illustrates a modified arrangement of the electrode line of FIG. 18 and provides an arrangement whereby the group of electrodes e_2 through e_6 and e_{10} through e_{14} are replaced, respectively, by continuous bar or strip electrodes **116** and **117**; the remaining electrodes are the same as those in FIG. 18 and have been designated in the same manner e_1, e_7, e_8, e_9, e_{15} and e_{16} and these electrodes act in the operation of the system in the same manner as the corresponding group of electrodes in FIG. 18. These strip electrodes are formed with rounded left and right end portions similar in configuration to the electrodes of FIG. 18 and which are connected by a body portion of a thickness less than the diameter of the rounded portions and providing a flat generally convex area on the upper sides of the electrode. These areas are filled or coated with plastic or other insulating material which may be the same as that which surrounds the electrodes and thus provide two exposed electrodes in conducting relationship and separated by an insulating area. During the operation of the system a portion of each of the masses of charged particles moving over the electrodes **116** and **117** collects on the insulated surface between the two end portions and after a certain amount of electric charge has accumulated, the resulting electric field intensity prevents additional ions from striking this surface and thereby minimizes the loss of charge from that mass of particles. This surface charging effect on the insulation surface over each electrode element, of course, occurs during each half cycle and represents a small continuous loss during operation of the system. This loss is calculated to be in the order of 20 to 80 watts per square foot of area. However, this loss is less than that occurring when the entire surface of the electrode is of conductive material, in which case the charges reaching the electrode surface are conducted through the voltage generating system and do not build up a counter-potential. The electrodes **116**, furthermore, are constructed so that the first rounded portion or rear edge of the electrode is smooth while discharge points are provided at the forward end, these points being in the form of rows of points constructed in the same manner as described in connection with the previous illustrations.

FIGS. 22, 23 and 24 illustrate another excitation system embodying the invention. FIG. 22 shows a line of electrodes numbered e_1 through e_{12} and then repeating e_1, e_2 and e_3, this being a portion of a continuous repeating pattern of twelve electrodes. The excitation transformer connections for this line of electrodes are indicated in FIG. 23 and comprise an arrangement such that the successive electrodes from **1** through **12** are excited at equal phase differences of the alternating potential. The phase difference between the electrodes is indicated in FIG. 24 where the potential of each of the electrodes is indicated by a vector bearing the designation of its respective electrode. The excitation system for the line of electrodes comprises a network of transformers three connected in star and three in delta to the three terminals of a three-phase source, these terminals being indicated at A, B and C. The voltage wave on each of these terminals is 120 degrees out of phase with that on each other terminal. The primary windings of the transformers are connected in this star-delta arrangement, the three primary windings of the star connection being designated **120**, **121** and **122** and those in the delta connection **123**, **124** and **125**. The end terminals of the transformer secondaries are connected to the electrodes and the terminals of these secondaries have been indicated by the designations of the electrodes to which they are connected; thus electrodes e_1 and e_7 are connected to the transformer **120**, e_5 and e_{11} to **121**, e_4 and e_3 to **122** and in a similar manner e_{12} and e_6 are connected to **123**, e_{10} and e_{10} and e_{11} to **124**, and e_8 and e_2 to **125**. The center taps of each of these secondary windings are grounded. This connection provides an arrangement whereby each of the two electrodes connected to any one of the secondaries are at opposite potentials at any instant of time during the alternating current cycle and the connections as shown are further arranged so that the successive electrodes e_1 through e_{12} are at 30 degrees phase difference and provide successive potentials from the line of electrodes. By this arrangement electrode e_2 lags 30 degrees behind e_1 and electrode e_3 lags 30 degrees behind e_2 and so on through the series of electrodes. This moves the charged particles along the electrode line at a rate determined by the frequency of the alternating potential and by the spacing between the electrodes. This arrangement thus provides an electric field along the line of electrodes which is in the form of a true traveling wave. The velocity of the traveling wave is $V=fxd$ where V is the velocity in cm./sec., f is the frequency in cycle/sec. and d is the distance in centimeters between electrodes of the same phase. These units can also be measured in feet/sec., cycles/sec., and feet per cycle, respectively. When the excitation voltage and frequency are adjusted so that the charged particles are propelled along the airfoil surface at the same velocity as the traveling wave, resonance is achieved. This high velocity flow of charged particles and the induced surface layer flow of the ambient fluid over the airfoil reduces the fluid pressure on the airfoil surface thereby causing lift.

FIG. 25 is a schematic diagram illustrating another embodiment of the invention wherein the excitation system produces a traveling wave along the electrode line and illustrates further a switching arrangement for changing the velocity of the traveling wave and consequently the resonant velocity of the charged particles moving along the line of electrodes. This switching means for changing the velocity of the charged particles and the ambient fluid flow is used in conjunction with variations

315 || @HighEarthOrbit_ linktr.ee/Grider2

of frequency to control the lift or speed of the aircraft or other body on which the system is mounted. In FIG. 25 the line of electrodes comprises groups of electrodes designated e_1 through e_{12} and these electrodes are connected to be excited by a multiphase generator **128** driven by an internal combustion engine **129** through a speed changing transmission **130**. The generator **128** comprises six generating elements designated **131** through **136**, inclusive; these generator elements are operated so that they produce alternating current potentials which are successively 30 degrees out of phase, this phase difference being indicated diagrammatically in the figure by the position of the arrows on the respective generating elements. The rotation of this vector arrow is counterclockwise which means that the voltage on e_2 lags 30 degrees behind the voltage on e_1, e_3 lags 30 degrees behind e_2 and so on through the series of electrodes. The voltage wave on the lower terminal is 180 degrees out of phase with the voltage on the upper terminal. Therefore the lower terminal of the generator element **131** is connected to electrode e_7 while the upper terminal is connected to e_1, and so on through the series of generator elements. The terminals of the generating elements are connected to pairs of switch blades all of which are assembled as a gang or unit actuated by a common mechanism indicated generally by the dotted line **137**. In their left hand positions as shown in the figure these switches connect the top terminals of the generators **131** through **136**, respectively, to the electrodes e_1 through e_6 and the bottom terminals, respectively, to the electrodes e_7 through e_{12}. The connections between the generators and the electrodes are made through a cable **138** the separate wires of which are indicated by the same designation as the electrodes to which they are connected.

FIG. 26 is a graph showing the alternating potential wave form of generator element **131**. This wave has for purposes of illustration, and not by way of limitation, been illustrated as a sine wave; however, for many applications it may be desirable to employ flat topped wave forms. The shaped wave may be modified for other applications by the use of high voltage pulses such as indicated in FIGS. 10 and 11. In FIG. 26 a plurality of instantaneous times are indicated for a period including the times from t_1 to t_{12}, these being at equidistant points through a complete cycle so that each interval is one-twelfth of a cycle and represents a phase change of thirty degrees. The wave forms for the other generators **132** to **136** are the same except that each successive one in point of time is thirty degrees lagging in phase with respect to the preceding generator.

FIG. 27 is a graph showing the change in potential of the electrodes along the line when the switches are in their high speed or left hand position as shown in FIG. 25. In this figure the voltage is plotted against distance along the line of electrodes. The figure comprises a plurality of curves at spaced time intervals indicated at t_1 through t_{12}. For additional periods the curves repeat because the interval between t_1 and the next instant, say t_{13}, represents a full cycle of the potential wave and a curve designated t_{13} would be identical to the curve t_1. The graph FIG. 27 represents the potentials of the electrodes along the line e_1 through e_{12} at each of the instants of time represented by the individual curves. The wave produced by this multiphase system is a true traveling wave and, at resonant velocity, the charged particles move in synchronism with the wave. At time t_1 a relative high electric field intensity exists from electrode e_2 to electrode e_6 causing the propulsion of and, if high enough intensity for corona, the generation of positive ions over this interval. From e_6 to e_8 the field intensity is relatively low in which the ions which get ahead of their proper position in the traveling wave will coast and tend to slow down. At the same instant of time t_1, the high intensity electric field from electrode e_8 to electrode e_{12} will propel negative ions toward the right and, if the electric field intensity is high enough to produce corona, a concentration of negative ions will be created in this interval. If some of these negative ions get ahead of the traveling wave they will enter the low intensity field from e_{12} to e_2' where they will coast and slow down. As the traveling wave moves forward in the next instant of time it will again pick up and accelerate these negative ions which got ahead and were slowed down. In this manner, the mass or cluster of ions tend to remain intact thereby minimizing losses. For each successive instant of time t_2, t_3, t_4, t_5, etc. the traveling wave advances one electrode spacing. In this system the clusters of ions are continuously in the high field intensity portion of the traveling wave and are never in a coasting position. Only the ions which get ahead or behind this high intensity portion of the traveling wave will enter a coasting situation. Those ions getting ahead of the traveling wave will slow down and consequently rejoin the ion cluster being advanced by the traveling wave. A flattening of a small part of the voltage wave crest on each half cycle may be employed to facilitate keeping these clusters of ions intact. Furthermore a small pulse at the leading edge of the flat top portion of each half cycle may be used to provide an extra acceleration for these ions which tend to lag behind the traveling wave and thereby cause them to catch up and join the ion masses being advanced by the traveling wave.

When the voltage is sufficiently high, corona discharge is produced at time t_1 over the distance from e_2 to e_6 and from e_8 to e_{12} which covers two-thirds of the surface area. Only one-third of the area involving the distance from e_6 to e_8 and from e_{12} to e_2' is dead or not used insofar as corona discharge is concerned. At each successive time interval, these areas advance with the traveling wave, but the ratio of about two-thirds of the area involved in corona discharge and one-third in coasting area still remains. This system makes it possible to put a large amount of energy into each unit area of the airfoil surface and thus produce a high velocity flow of ions and fluid media with a consequent large reduction of fluid pressure.

When the switch operator **137** is moved to the right to connect the switches to the right hand positions, the generator elements **132**, **134** and **136** are disconnected while each of the other generator elements has each of its terminals connected to a selected pair of the electrodes. Thus the top terminal of the generator element **131** is connected to electrodes e_1 and e_7 and its bottom terminal is connected to electrodes e_4 and e_{10}; the generator **133** has its upper terminal connected to the electrodes e_2 and e_8 and its lower terminal connected to electrodes e_5 and e_{11}; and generator **135** has its upper terminal connected to electrodes e_3 and e_9 and its lower terminals connected to electrodes e_6 and e_{12}.

This right hand position of switch **137** is the low speed position at which the resonant velocity is reduced to one-half that of the full speed position. The voltage-distance curve for this condition of operation is illustrated in FIG. 28 and it will be noted that the complete cycle takes place in the distance of six electrodes instead of twelve; this is readily apparent when it is noted that the generator elements **131**, **133**, and **135** are being used and that these generator elements provide voltages 60 degrees out of phase with one another. Thus the resonant velocities for the left-hand and right-hand switching positions provide full and one-half speed, respectively. On the curve FIG. 28 the curves for the instants of time t_7, t_8, t_9 and t_{10} are identical with the curves t_1, t_2, t_3 and t_4, respectively.

The excitation system shown in FIG. 29 employs a direct current power source, indicated in FIG. 30, to produce two excitation voltages each comprising alternate positive and negative bursts as indicated by the curves **140** and **141**. The bursts of positive and negative excitation of the two excitation curves **140** and **141** are 90 degrees out of phase with one another. Dotted lines

316 || @HighEarthOrbit_ linktr.ee/Grider2

on the curves indicate the sudden transition from positive to negative which is effected by current interruption as described below.

FIG. 29 has been drawn similarly to FIGS. 15, 16 and 17 and shows diagrammatically the physical arrangement of the electrodes together with the curves showing the potentials at eight different instants of time at equally spaced intervals. This diagram also includes diagrams of the eight corresponding positions of the generator FIG. 30 in alignment with the curves for the eight intervals of time. Eight electrodes of a line are indicated at the left-hand side of the figure and are designated in groups of four electrodes indicated at e_1, e_2, e_3 and e_4 in each group. These electrodes are connected to four bus bars or leads **142**, **143**, **144** and **145** connected, respectively, to the electrodes e_1, e_2, e_3 and e_4 of each group. The generator shown in FIG. 30 comprises a direct current power source **146** and a pair of slip rings **147** and **148** mounted on a shaft indicated by a dotted line **149** and connected by brushes, respectively, to the positive and negative terminals of the generator **146**. A motor **150** is provided to drive the shaft **149**, and a commutator **151** is mounted on the other end of the shaft on the far side of the slip rings **147** and **148**; the commutator comprises two conducting segments **152** and **153** connected, respectively, to the positive and negative slip rings **147** and **148** and separated from one another by a bar of insulating material **154** extending diametrically of the commutator. The direct current potential is picked off the commutator by four brushes **156**, **157**, **158** and **159** which are provided for connection to the bus bars **142**, **143**, **144** and **145**, respectively, of FIG. 29. For the purposes of quick reference these terminals **156** through **159** have been marked with the electrode designations e_1, e_2, e_3 and e_4 corresponding to the electrodes to which the brushes are connected. Each of the instantaneous time diagrams of FIG. 29 includes a representation of the commutator **151** in its position for producing the corresponding voltage relationship. The insulating bar **154** is sufficiently wide that no brush engages both conducting halves of the commutator at one time and that no corona or spark-over occurs from one half to the other.

The connections of the generator of FIG. 30 are such that the electrodes e_1 and e_3 are always opposite, the brush **156** being negative when the brush **158** is positive and vice versa. In a similar manner the electrodes e_2 and e_4 are always at opposite polarities since the brushes **157** and **159** always engage diametrically opposite sides of the commutator **151**. The excitation voltages shown on the curves **140** and **141** are the potentials of the electrodes **1** and **2**, respectively, and it is to be understood that the potentials of the opposite electrodes **3** and **4**, respectively, are at equal and opposite polarity at each instant of time. Thus in reference to the curve **140** and the corresponding diagrammatic positions of the commutator it will be noted that the potentials of the electrode e_1 is positive at the first four time instants and changes to negative for the second four instants of time. The electrodes e_2 which are connected to the brush **157** at 90 degrees to the brush **156** on the commutator **151** reach their respective potentials at an effective phase difference of 90 degrees; thus in curve **141** the electrodes e_2 are negative at the first two times t_0 and t_1, change to positive and remain positive through the period including the times t_2 through t_5, then return again to negative during the period including times t_6 and t_7. The potentials resulting from operation of this generator arrangement provide in effect two periodic or alternative current potential waves which are 90 degrees out of phase with one another. This is thus a two-phase alternating potential system and produces a true traveling wave.

The action of the electrode system upon excitation to produce movement of the charged particles over the series of electrodes is essentially similar to that which takes place in connection with the systems heretofore described; and the diagram of movement of the positive and negative masses of charged particles is similar to the diagrams in FIGS. 15, 16 and 17. At the time t_0 the masses of positive particles are moving from the positive electrodes e_1 toward the negative electrodes e_2 and at t_1 these potentials remain the same and the masses of particles are moving in the same manner. The negatively charged particles in a similar manner are moving away from the negative electrodes e_3 toward the positive electrodes e_4. Between the times t_1 and t_2 the voltage wave **141** changes polarity so that the electrodes **1** and **2** are both positive and the electrodes **3** and **4** negative and the positive charged masses are moving down this gradient from the electrodes **2** toward the electrodes **3** while the negative masses are moving away from the negatively charged electrodes e_4 toward the positively charged electrodes e_1; the relative excitation of the electrodes changes again between t_3 and t_4 and at the time t_4 when the electrodes e_1 and e_4 are negative and the electrodes e_2 and e_3 are positive, the positive charges are propelled away from the electrodes e_3 toward the electrodes e_4 and the negative ions move from e_1 toward e_2. Just before the time t_6 the potentials are again changed, the electrodes e_1 and e_2 now being negative and the electrodes e_3 and e_4 positive; under this condition of excitation the positively charged masses are moving along the electrode line away from the positively charged electrodes e_4 toward the negatively charged electrodes e_1 while at the same time the negative masses are moving along the line away from the negatively charged electrodes e_2 toward the positively charged electrodes e_3. It is observed that between every other pair of electrodes the ions are being propelled by an electric field and between all intermediate pairs of electrodes the ions are coasting through a zero potential gradient. After each quarter cycle the traveling wave advances one more electrode position and after time t_7 repeats the cycle starting at t_1. The conditions described are for the resonant velocity of the charged particles moving in synchronism with the traveling wave over the series of electrodes shown at the left-hand end of FIG. 29.

FIG. 31 illustrates an alternating current generator arrangement for producing essentially the same type of operation as that described in connection with FIG. 29. In this figure a group of four electrodes of a series are indicated by e_1, e_2, e_3 and e_4; these electrodes are connected to be excited by two square wave generators **161** and **162** which provide wave forms similar to those shown in FIG. 11. The square wave generator **161** is provided with output terminals **163** and **164** connected through a switch **165** to lines **166** and **167**, respectively, which are connected to the electrodes e_1 and e_3 as indicated and to the corresponding electrodes in similar groups of four throughout the series. The generator **162** has output terminals **168** and **169** connected through a switch **170** with lines **171** and **172** connected, respectively, to electrodes e_2 and e_4 of the series. The output wave of the generator **161**, as indicated at **174**, is of generally square wave form with a high voltage pulse like that of FIG. 11 and a similar wave form, indicated at **175**, but lagging 90 degrees is produced by the generator **162**. Thus the excitation produced by these two generators is essentially similar to that represented by the waves **140** and **141** produced by the generator of FIG. 30, except that the present waves are continuous square waves rather than the interrupted waves produced by the generator of FIG. 30. The generators **161** and **162** thus produce continuous waves 90 degrees out of phase and provide a two-phase system producing a true traveling wave along the line of electrodes represented by the four electrodes e_1, e_2, e_3 and e_4. The fluid flow produced by excitation of the electrodes in FIG. 31 is at a resonant velocity dependent upon the frequency of the generators **161** and **162** and the distance between the electrodes.

FIG. 32 is a graph representing operating characteristics of the systems of the invention represented by way of example by the systems of FIGS. 15, 16, 17, 18, 22–23,

317 || @HighEarthOrbit_ linktr.ee/Grider2

25, 29 and 31. In each of these systems surface layer fluid flow at a resonant velocity may be achieved. The left hand group of curves in FIG. 32 represent the changes in velocity with frequency for seven different electrode spacings. These spacings are the minimum spacings between electrodes having the same phase relationship. The curve represents spacings of one inch, one and one-half inches, two, three, four, six and eight inches and cover velocities within a range up to 600 miles per hour secured by frequencies up to 5,000 cycles per second. These electrode spacings and frequencies are shown by way of illustration and not limitation in that higher frequencies and greater spacing may be used. The right hand portion of the graph represents the pressure reduction in pounds per square foot resulting from the surface layer fluid flow at the resonant velocities measured in miles per hour and plotted along the vertical axis; the five curves of this portion of the figure representing the characteristics at sea level and at 20,000, 40,000, 55,000 and 70,000 feet altitude. Thus, by way of example, when a system embodying the invention is operated at a frequency of 800 cycles per second with a spacing between electrodes of like phase relationship of 6 inches, a resonant velocity of approximately 270 miles per hour is secured and at 40,000 feet a reduction in pressure of 50 pounds per square foot is obtained. The same reduction in pressure may be secured at the lower speeds of about 190 and 130 miles per hour at 20,000 feet and sea level, respectively, thus for the same spacing of electrodes the frequency of operation of the system may be reduced to about 550 and 400 cycles per second, respectively, at these lower altitudes. For the same resonant velocity of 270 miles per hour giving a pressure reduction of 50 pounds per square foot the pressure reduction at the lower altitudes is substantially greater; for example, at 20,000 feet a pressure reduction of the order of 105 pounds per square foot may be secured and at sea level this reduction in pressure may be over 225 pounds per square foot. As elevation is increased in flight, the frequency must be increased to maintain a constant pressure reduction for sustentation. If a 50 pound per square foot pressure reduction is needed for sustentation, this can be achieved at sea level by a frequency of 800 cycles per second with a distance of three inches between electrodes of the same phase relationship and sufficient excitation voltage to achieve resonant velocity. At 20,000 feet this same condition can be achieved by increasing the frequency to about 1100 cycles/second. At 40,000 feet a frequency of about 1600 cycles/second is needed. However, if switching such as shown in FIG. 25 is provided so the distance between electrodes having the same phase relationship can be increased to six inches, then a frequency of only 800 cycles per second is needed to give the 50 pounds per square foot pressure reduction if resonant velocity is achieved by control of the excitation voltage. Using this spacing of six inches, a frequency of about 1100 cycles/second is required at an altitude of about 55,000 feet.

It follows that with the pressure differences available as shown on these curves effective sustentation of aircraft and other vehicles may be secured at relatively low resonant velocity, and pressure differences produced together with the minimum skin effect and low turbulence makes flight possible without power plants of the present conventional types.

The effective use of the excitation systems depends upon the proper construction and arrangement of the electrodes and several forms and arrangements of electrodes suitable for various purposes are illustrated by way of example in FIGS. 33 through 46.

The electrodes shown in FIGS. 33 and 34 represent a small section of the electrode surface of a system embodying the invention; the electrodes in this case are metal rods of round cross sections the tops of which are exposed above the insulating surface **180** as at **177**; these rods are connected together in pairs by wires **178** so that each pair of electrodes is in effect a single electrode, both bars of the pair being at the same potential. The series of electrodes in FIGS. 33 and 34 is arranged for propelling the particles and the fluid flow from left to right as viewed in these figures and the right hand bar of each pair **177** is provided with a row of sharp points **179** positioned at a slight angle and extending just above the surface of the airfoil indicated at **180**; these sharp points are provided to create a very strong electric field to produce a corona discharge and form the masses of charged particles required for operation of the system.

The construction of electrodes shown in FIGS. 35 and 36 is similar to that shown in FIGS. 33 and 34 except that electrodes instead of being coupled pairs of bars as in the first illustration comprise strips **181** having round or beaded edges **182** and **183**, respectively, which provide a generally concave zone between the edges. The strips are embedded in the insulating body of the wing or other surface on which the electrode system is mounted and the concave areas between the beaded edges of the strips are coated or filled with insulating material as indicated at **184**. Rows of points **185** for facilitating corona discharge are mounted on the forward edges **183**. This arrangement operates in the same manner as the arrangement of electrodes of FIGS. 33 and 34.

When the electrodes of either of these arrangements are excited electric fields are set up in the manner indicated by the dotted equi-potential lines shown in FIG. 37; the electrodes of FIGS. 33 and 34 are illustrated, the left hand pair being shown as negative and the right hand pair at positive; a single electrode of a third and negative pair appears on the far right. A positively charged particle is shown above the negative pair of electrodes and a negative particle above the positive pair. The directions and velocities of the charged particles are indicated by the arrows extending from the particles above the pairs of electrodes. Initially during each half-cycle the particles are given a downward component of velocity by the electric field as shown in FIG. 37, a charge of the same polarity builds up, however, on the insulating surface between the two electrodes of each pair as a result of some of these first charged particles striking the surface and thereafter the particle is repelled from the surface and the velocity vector becomes substantially parallel to the surface as shown in FIG. 38. This results in a relatively small current loss during each half-cycle. This arrangement of electrodes in pairs and with the corona discharge needles on the leading edges and pointing in the direction of fluid flow provides an effective arrangement assuring a near zero potential gradient zone over which the charges coast.

In some applications of the invention it is desirable to provide an electrode system which may be reversed to provide the flow of fluid in either of two directions. A system of electrodes for this purpose is illustrated in FIGS. 39 and 40 in which alternate bars have been indicated at **186** and **187**, the bars **187** are provided with dual sets of corona discharge points indicated at **188** and **189** the points **188** pointing to the left and the points **189** to the right. In order to utilize these electrodes in a two-way or reversible system a switching arrangement is provided so that the electrodes **187** may be connected in conducting relationship alternatively with the electrodes **186** on either side thereof. For this purpose as shown in FIG. 40 a switch **190** is provided in the lead from each of the bars **187** and may be connected either to a lead **191** from the left-hand bar **186** or a lead **191*a*** from the right-hand bar **186**. As illustrated the switches **190** are in their left hand positions and the pairs of electrodes are arranged for movement of the fluid from left to right, the right hand points **189** of the bars **187** being employed for corona discharge and no discharge taking place from the points **188** since the bars **187** and the left hand bars **186** are at the same potential. When it is desired to reverse the flow of fluid over the surface the switches **190**

318 || @HighEarthOrbit_ linktr.ee/Grider2

are moved to the right hand position whereupon the bars **187** are connected with the right hand adjacent bars **186** and the points **188** are employed for corona discharge.

Another form of electrodes suitable for reverse operation is indicated in FIGS. 41 and 42 which illustrates a plurality of electrodes having points **193** extending through the insulating surface of the wing or other structure **194** at the surface of which the electrode system is mounted. The points **193** are formed on bars **195** which extend along the lower face of the wall **194** and carry the points **193** which extend vertically from the bars upwardly through the wing surface. Since these upwardly directed points present the same configuration to the fluid flow regardless of the direction of flow the electrodes may be used for operation in either direction of movement of the fluid.

FIGS. 43 and 44 illustrate a reversing flow arrangement employing electrodes like those shown in FIGS. 41 and 42 for the purpose of forming directional electrodes with other bars located in the surface of the wall or wing structure. As shown in FIGS. 43 and 44 three bars **196** similar to the bars **195** of FIGS. 41 and 42 are mounted in spaced relationship below the wall structure **197** each of the bars **196** having vertically extending points **198** projecting through the wall **197** and slightly above its surface; between each set of points there are mounted three electrode bars designated **200**, **201** and **202**. Electrical connections are provided for arranging the electrodes in groups depending upon the desired direction of flow of the charged particles and fluid medium. Each of the electrode bars **196** is connected to a switch **203** and each of the bars **201** is connected to a switch **204**; in the positions illustrated the switches **203** connect the electrodes **196** to the electrode **202** and the switches **204** also connect the electrode **201** to the electrode **202**. Thus the electrodes **201** and **202** are connected to an electrode **196** on their right hand and provide a combined electrode which includes the points **198** for producing corona discharge at the forward edge of the electrode in the direction of fluid flow, the flow in this case being from left to right. When it is desired to reverse the flow of fluid medium, so that it moves from the right to left as viewed in FIG. 44, the switches **203** and **204** are reversed so that they are in their opposite positions and electrodes **201** and **200** are connected to the electrode **196** on their left; this connection thus provides a combined electrode having the discharge points **198** at its front edge in the direction of fluid flow.

The switching arrangement of FIGS. 39, 40, 43 and 44 may be employed with the various control and switching systems described heretofore so that the systems are capable of moving fluid in either of two selected directions. If a multiphase traveling wave system is used the phase relationships between successive electrode elements must also be reversed to reverse the fluid flow direction.

For some applications it is desirable to provide electrodes not only at the surface but for some distance above the surface and an arrangement for this purpose is shown in FIGS. 45 and 46 wherein the electrodes have been illustrated as comprising a series of four bars **206** the bottom bar of which is embedded in the wing surface or other body **207**; these electrodes are connected by vertical strips **208** so that each set of four electrodes constitutes an array extending perpendicularly a substantial distance from the surface **207**. Each of the bars is provided with a row of corona discharge points **209** so that this arrangement provides a series of arrays of electrodes arranged to produce a flow of charged particles from left to right as viewed in these figures.

The several electrode arrangements just described in connection with FIGS. 33 through 46 inclusive may be employed for producing pressure differences in accordance with Bernoulli's principle and also the reactive forces for effecting sustentation and propulsion of vehicles or other bodies in fluid media; the types of electrodes and their arrangement are selected in accordance with the particular application in which they are employed.

Various forms of self-propelled bodies including sustentation and propulsion systems embodying the invention are disclosed in FIGS. 47 through 65. It will be understood that, in the application of the system of the invention to these various types of vehicles and other apparatus, the sectionalizing of various areas of the surface of the equipment and the control of the excitation system both for effecting different velocities of flow of fluid medium and for reversing the flow may be employed. These various illustrations are diagrammatic but indicate the essential characteristics and arrangements of the fluid flow producing areas and the manner in which the electrode assemblies are arranged. In the various figures the electrodes have been indicated and corona discharge points have been shown. It will be understood, however, that these electrodes and their points have been shown exaggerated in spacing and size and reduced in number for purposes of illustration to indicate the direction of flow of fluid under influence of the electric fields produced by the electrodes.

Referring again to the drawings, FIG. 47 illustrates a device suitable for lifting and moving objects from place to place and which, for example, may be employed for the same purposes as a crane or derrick in handling heavy equipment. The housing or structure of this embodiment comprises an upper shallow bowl or saucer-shaped central area **215** and an outer similarly formed rim area **216**, these areas being connected by a cylindrical wall portion **217**. The upper area **215** is provided with a plurality of electrodes arranged in series in the form of closed circles **218** extending concentrically with the central axis of the device and arranged to propel the charged particles and air or other fluid medium in a circular path along the top surface in a counterclockwise direction when viewed from the top as indicated by the arrow. It will be evident that the reactive thrust produced by the electrodes in moving the charged particles about the circles of the upper portion produces a rotational force or torque on the body tending to turn the body about its axis in a clockwise direction as viewed from the top. In order to counteract this rotation the electrodes on the lower portion **216** are arranged to drive the charged particles and fluid medium in the opposite direction, or clockwise direction as viewed from the top, so that the reactive thrust acting in a counterclockwise direction will counterbalance the torque created by the electrodes on the upper portion **215**. The operation of the excitation system, which may be one of those described above, produces a high velocity flow of air around the closed circular paths and creates a lifting force on the body to move it upwardly and to hold it in a hovering position and to control its descent. The power for this type of equipment may be provided through a suitable cable such as indicated at **219**, and control wires may be included in this cable so that the entire control of the device may be effected from the ground or other station. This lifting device includes suitable chains or cables **220** provided with hooks **221** at their lower ends to which the usual slings or cables may be attached for lifting purposes.

The sustentation and propulsion system of this invention may be incorporated in many types of vehicles, and another form of vehicle which may be used for passenger service is illustrated in FIG. 48. This vehicle is provided with a body having vertical side walls **222** and top and bottom walls **223** and **224** which are curved in generally the same manner as an airfoil section. The vehicle is provided with a vertical tail assembly **225** which may be provided with control excitation surfaces of the same type as those shown and described in connection with the tail assembly of the aircraft in FIG. 1.

The aircraft of FIG. 48 has been shown as provided with a plurality of side windows **226** and a front observa-

319 || @HighEarthOrbit_ linktr.ee/Grider2

tion window or windshield **227** extending across the front of the vehicle and conforming to the general airfoil section thereof. In this embodiment, lines of electrodes are provided extending across the top wall **223** which provide the required sustentation and propulsion forces. In addition, electrode excitation systems are provided on the side walls as indicated on the wall **222**, these excitation areas may be energized to assist the forward movement of the craft by the reactive force produced therein; the principal use of these side electrode systems, however, is to effect direct sideways movement of the craft by selective excitation of areas on the two sides to facilitate maneuvering.

The propulsion and sustentation system of this invention is particularly suited to the powering of aircraft similar in shape to the popular conception of the "flying saucer," and several forms of the flying saucer type of vehicle are illustrated in FIGS. 49 through 55; all of these embodiments of the invention are capable of flying directly upwardly through the atmosphere or horizontally and of hovering.

In the first of these saucer-type vehicle arrangements as shown in FIGS. 49 and 50 the electrode areas have been shown divided into eight generally pie-shaped sections **228** and all of the electrodes are in the form of comb-like segments or rings **229** the rows of points extending along concentric circles and forming the pie-shaped sections. All of the electrodes have these discharge points but only those on the lower half of FIG. 49 have been illustrated. The upper inverted bowl or saucer-shaped portion of the housing is provided with a central airguide or cone **230** which directs the air from above the vehicle onto the pie-shaped sections of the saucer airfoil. The electrodes are pointed downwardly over each section so that the flow of fluid is produced from the center outwardly and downwardly over the inverted bowl-shaped form to the periphery of the vehicle. It will thus be apparent that in addition to the Bernoulli pressure reduction lifting effect produced by operation of the electrodes to produce fluid flow, there is an additional reactive force tending to push the craft upwardly in view of the downward direction of the electrode points; thus the reactive forces produced in the acceleration and propulsion of charged particles are effective to supplement the lifting forces produced by the pressure differences. The lower saucer-shaped portion of the body is also provided with similar electrodes indicated at **231** which may be employed for maneuvering purposes and also for effecting a rapid descent when desired. The electrodes in this section are also arranged to produce a flow of fluid from the center of the wall outwardly toward the perimeter. The various sections of the electrode system may be operated by the selective controls indicated above so that, for example, lateral movement of the aircraft may be produced by energizing only one of two oppositely directed sets of electrodes. Also reversible electrodes such as those illustrated in FIGS. 39 through 44 together with reversible connection of the excitation system may be used on selected pie-shaped sections to facilitate the high speed horizontal movement of the craft.

For purposes of landing and of moving the vehicle about the ground a tricycle landing gear comprising three caster-type wheels **232** is employed. Conventional arrangement for retracting the landing gear may be provided. An aircraft of this type may easily be maneuvered and requires a minimum of tipping to secure various degrees of forwardly sloping surface. It will be noted that the faces of the upper and lower shells provide components of force in the horizontal plane and facilitate the directional control of the vehicle without requiring it to be tipped or banked in the direction in which it is desired to move. By operation of the control to select the individual electrode areas to be energized, the vehicle can be moved forward, back, right, left, up or down without turning, banking or otherwise changing the vehicle's orientation. However, a conventional banked turn can also be executed if desired. A vehicle of this type when made water tight may be operated both in the air and under water. It will be understood that the electric potentials required for ionization and operation of the system to produce fluid flow in water are different from those for air in view of the different characteristics of the two fluids. However, the overall control of the system and the manner in which the vehicle is maneuvered remain the same.

In the embodiment of FIGS. 51 and 52 the vehicle body is similar in form to that of FIGS. 49 and 50 but is constructed with a central opening indicated at **236** extending entirely through the body which is thus of doughnut or somewhat toroidal form; the outer circumferential portion is of essentially the same cross section as that of the embodiment shown in FIGS. 49 and 50. In this embodiment the arrangement of the electrode elements is generally the same as that shown in FIG. 49, the electrode elements being located in eight sectionalized portions of the surface area on both the upper and lower walls. The electrode points in this case have been illustrated as arranged oppositely from those in FIG. 49 as indicated by the electrodes on the left-hand portion of the plan view FIG. 1; as indicated at **237** the points of the electrodes extend toward the center so that the fluid flow is from the periphery up over the curved wall and thence down through the opening **236**. The downward flow of fluid through the opening produces a thrust which supplements the lift on the upper shell and increases the sustentation effect. In a similar manner increased downward force may be provided by excitation of the bottom wall electrodes. The vehicle is provided with a landing gear similar to that of FIG. 50 as shown at **238** in FIG. 52. Access to the vehicle may be had through a suitable door or hatch (not shown).

In FIGS. 53, 54 and 55 there is illustrated an embodiment of the invention which is particularly adapted for horizontal flying and hovering and which includes an arrangement for moving certain sections of the airfoil surfaces to secure more effective use of the available forces. As shown in FIGS. 53 and 54 the body of the vehicle is somewhat similar to that of FIGS. 51 and 52 and comprises a somewhat toroidal hollow body having electrode assemblies arranged on the outer surface and sectionalized in eight equal generally pie-shaped portions, extending around the upwardly convex wall as indicated at **240**. The central opening through the toroidal body as indicated at **241** is provided with a top closure plate or disc **242** and a secondary rectangular closure plate or member **243** which is arranged centrally of the disc **242** and extends along the axis parallel to the vertical diameter of the disc **242** as viewed in FIG. 53. The electrode areas have been shown arranged for horizontal flight from left to right as viewed in FIG. 53; for this purpose the electrodes on the left-hand pie-shaped excitation areas **244**, **245** and **246** and those on the right-hand areas **247**, **248** and **249** are arranged to produce a flow of fluid in the same direction, in other words in FIG. 3 from right to left, and the electrodes on the disc **242** and the rectangle **243** are also arranged to be excited to produce a flow from right to left. The fluid flow is radial in all of the pie-shaped areas and, therefore, the flow over the areas, particularly **244**, **246**, **247** and **249**, is not truly parallel to the direction of horizontal flight; however, the lateral components cancel out because the patterns are symmetrical with respect to the line of flight. This is a flow condition for horizontal flight and the remaining pie-shaped electrode areas **250** and **251** on the vertical axis as viewed in FIG. 53 are not energized. This vehicle and electrode area arrangement makes possible a wide range of control by sectionalizing the various electrode areas. In order to secure maximum flexibility of control all of the electrodes preferably are made of the reversible type such as illustrated in FIGS. 39 through 44. It will

320 || @HighEarthOrbit_ linktr.ee/Grider2

now be seen that the direction of flight of the aircraft may be reversed so that it moves from left to right instead of right to left, the excitation system being reversed to make all of the electrodes in the excited areas produce flow in the opposite directions from those indicated in FIG. 53. Furthermore, by making the electrodes on the areas **250** and **251** also reversible these areas may be used with the areas **244** and **247** and **246** and **249** to propel the craft at right angles to the directions indicated on the figure. Obviously, also, any selection of sets of three areas on opposite sides of the aircraft may be employed to effect movement in any of the eight possible directions. It will be understood, however, that with the arrangement shown the central exciting area on the discs **242** and **243** is employed only when the direction of movement is from right to left or vice versa as viewed in FIG. 53, this being the intended normal direction of horizontal travel of the aircraft and providing the most effective use of the propulsion system. The vehicle FIGS. 53 and 54 may also be moved vertically by energizing the several pie-shaped areas in the same direction either inwardly or outwardly or in opposite pairs inwardly or outwardly so that the forces are symmetrical. The electrode systems of surface portions **242** and **243** may be either energized or de-energized for the operation depending upon the amount of lift required.

In order to secure more effective hovering operation, the central passage **241** is opened and the closure members **242** and **243** raised and opened; and in addition a bottom closure, as indicated at **251**, is lowered so that the central passage is completely open and two separate passages are provided through the center, one an annular passage formed between the member **242** and the body of the ship, and the other a central passage formed between the member **243** and the member **242**. For hovering purposes the electrodes on all of the body surface, including all eight pie-shaped areas for full effect, are controlled to direct the fluid flow inwardly toward the center; and the electrodes on the closure portion **242** are also reversed on one-half the portion so that there is a balanced flow inwardly toward the opening between the member **243** and the closure **242**. The passage of the air through these openings is indicated by the arrows in FIG. 55 which shows the open or hovering position of the airship.

The lower wall areas of the vehicle shown in FIGS. 53, 54 and 55 may also be provided with electrode excitation zones in a manner similar to that shown in connection with the other saucer-like vehicles described above, and these zones may be employed for executing rapid descent and also for directional control purposes. The electrode areas may be further sectionalized so that rearwardly facing areas may be de-energized so that areas with the forward component of lift may be used for propelling the ship.

The vehicle shown in FIGS. 56 and 57 is similar to that shown in FIGS. 50 and 51 and includes the counter-rotational feature of the lifting body shown in FIG. 47. The vehicle shown in FIG. 56 comprises a central dome-shaped body portion **255** and a lower similarly sloping rim portion **256**, the two portions being connected by the main cylindrical wall of the vehicle at **257**. This vehicle includes a landing gear having three caster-type wheels **258**. The dome-shaped wall of the body section **255** is provided with a spiral line of electrodes extending from the center outwardly to the rim thereof; as illustrated in the detail view FIG. 58, a plurality of electrodes **260**, each comprising a short strip **260*a*** having a multiplicity of teeth or needles **260*b***, are held in spaced relationship to the vehicle wall on upright conducting lugs **259**. The electrodes are arranged around the spiral path so that the direction of the spiral path is from the center outwardly so that the reaction force produced by the propulsion of charged particles tends to turn the vehicle body counterclockwise as viewed in FIG. 56. In order to counteract this rotational effect the field of electrodes on the lower wall portion **256** is constructed as a spiral of electrodes **261** similar to the electrodes **260** but pointing in the opposite direction and arranged to drive the air in a spiral path about the vehicle in a counterclockwise direction. The reactive force on this path tends to turn the vehicle body clockwise and counteract the force of reaction produced by the electrodes **260** on the body section **255**. The corresponding directions of rotation which tend to be produced by the two sections of the excitation field are indicated by the arrows.

The vehicle shown in FIG. 59 is essentially similar to that shown in FIGS. 56 and 57 and presents the same general appearance. The upper section, however, is constructed differently, the upper wall of the body being a cone-shaped member **263** and the upper electrode surfaces being provided on a complementary cone-shaped member **264**; this member is pivotally mounted on the body on a bearing **265** at the top and concentric with the central axis of the body. The bearing allows the electrodes on the element **264** to rotate that element without imparting very much rotary torque to the body of the vehicle. In this manner minimum torque is transmitted to the body. Any driving torque on the body may be counteracted by energization of the sets of electrodes indicated at **266** on the lower skirt portion **267** of the vehicle. The lower electrodes **266** are preferably arranged in sections so they may be controlled selectively. These electrodes as illustrated are closed circles and each circle may be energized separately so that the number of circles and the forces applied may be selectively determined.

The systems for propelling aircraft or similar vehicles through fluid media as disclosed herein provide an effective arrangement for propelling space vehicles into the upper atmosphere so that a major portion of the fuel load of a rocket driven ship, for example, may be retained until the ship is prepared to leave the earth's atmosphere and so that the ship need not apply rocket power to drive the vehicle through the regions of denser atmosphere. FIGS. 60 and 61 illustrate a generally conventional form of rocket vehicle comprising a main cylindrical body **270** having a bullet-shaped nose **271** and four tail fins **272** at the rear. The surface area of the body is divided longitudinally into eight sections four of which are visible at **273**, **274**, **275** and **276** in FIG. 60 and the other four of which are indicated in the end view FIG. 61 at **277**, **278**, **279** and **280**. An engine driven generator **281** is provided in the body of the vehicle for supplying the electrode excitation. These eight surface areas are provided with electrode systems embodying the invention and in this case comprising short sections of rings about the body and these sections may therefore be controlled so that the craft may be maneuvered and driven through the atmosphere in a manner similar to the other vehicles described above and may be driven into the upper rarefied atmosphere. When it reaches the rarefied atmosphere this vehicle may be propelled into space by operation of a conventional rocket engine mounted within the vehicle and having a discharge nozzle **281** at the rear end thereof. In addition to the main rocket engine the craft is provided with the usual control rockets (not shown) for effecting changes in the direction of movement of the vehicle.

FIGS. 62 and 63 illustrate a vehicle suitable for flight through the atmosphere and in outer space and which is similar to the vehicle of FIG. 60 but employs a different propulsion system for movement in outer space. In this vehicle the body portion is of generally square cross section and comprises a main body **285**, a generally bullet-shaped nose **286** and a tail member having guide or stabilizing fins **287**. The generally flat areas of the outer surface of the body **285** are provided with electrodes of excitation systems embodying the invention and thus there are four such electrodes systems as indicated at **288**, **289**, **290** and **291**. These areas may be further sec-

321 || @HighEarthOrbit_ linktr.ee/Grider2

tionalized for control purposes if desirable. In addition to the electrode surfaces on the body portion of this rocket (FIG. 62) and also on the rocket FIG. 60, the tail fins may be provided with electrode excitation systems for both sides so that the electrical excitation may be employed for guiding purposes.

The vehicle of FIG. 62 is provided with four longitudinally extending relatively large tubes **292**, **293**, **294** and **295** arranged generally along the four corners of the rectangular section of the aircraft. These tubes are open at their rear ends and extend a substantial distance into the ship as indicated in the broken away section toward the center where the tubes **292**, **293** and **294** are visible. The inner walls of these tubes are provided with annular or ring sets of electrodes indicated at **296** in the tube **293** and also visible at the ends of the tubes and in the sectional view of FIG. 63 where it may be seen that all four tubes are provided with similar electrode assemblies. The electrodes in the tubes **292** through **295** are in the same general form as those heretofore described and are provided with needle points all directed rearwardly toward the open ends of the tubes. The forward ends of the tubes are arranged to be supplied with charged particles through respective pipes from a supply source as indicated at **298** in the broken portion of the wall **289** toward the forward end of the ship. The supply **298** is connected by four pipes to the respective four tubes and supplies electrically charged fine dust, ionized gases or other charged particles to the ends of the electrodes; when the electrode assemblies are energized these particles are driven forcibly at high velocity out of the tubes. The electrode assemblies on the inner walls of the tubes may not be energized until the craft reaches the rarefied atmosphere or until a burst of speed is desired, whereupon they are energized so that the reactive force urges the ship forward at a velocity determined by the momentum of charged particles which are discharged through the tubes. In order to attain the velocities required to escape from the earth's gravitational field the craft in FIG. 63 may be directed in a generally circular or spiral path about the earth until it builds up sufficient speed to escape from the earth's field. The excitation of the external electrodes may be stopped when the craft is beyond the limits of the atmosphere.

The use of the sustentation and propulsion system of this invention to carry rockets and space craft to the limits of a planet's atmosphere results in the saving of rocket fuel, making it possible to carry larger payloads or to conserve the conventional rocket fuel for propulsion through space and for control and maneuvering in space. The electric rocket propulsion system described in connection with FIG. 63 can be used for propulsion and maneuvering in space in place of conventional rocket fuels.

When the sustentation and propulsion system of this invention is used to propel a device through the atmosphere toward outer space, the type of discharge from the electrode elements will be governed by such variables as the applied voltage, frequency, wave form, pressure, temperature, impedance of the power supply and electrode spacing. For example, if these parameters are set for a low current discharge at one altitude then as the vehicle enters less dense air at higher elevations the low current discharge will tend to increase in intensity and gradually become a glow type discharge. Under still other conditions an arc-type discharge will take place. When the impedance of the power supply or other parameters are varied, the intensity of the discharge can be altered to produce various concentrations of ions and various physical appearances of the discharge ranging from the conventional corona, to glow, to arc, or spark types. All of these discharges will be useful in moving ambient fluids.

When any type of discharge takes place from a pointed electrode, a preponderance of ions of the same charge as the electrode are produced. Because of the very high potential gradient in the vicinity of sharp points, any charged particles whose charge is opposite to that of the electrode, will be very strongly attracted to the electrode and where they are captured and neutralized. If some ion pairs are produced far from the sharp-pointed electrode by any means such as collisions, the ion whose charge is different from that of the rest of the pulse will be quickly neutralized by recombining with the oppositely charged ions in the pulse and therefore will not appreciably affect the net flow of the fluid.

The fluid flow systems of this invention may be employed for various purposes wherein it is desirable to provide a laminar flow of fluid adjacent the surface, and as an example of such application there is shown in FIG. 64 a portion of a wind tunnel system comprising an inlet portion **300** and an outlet portion **301** connected by a constricted portion or throat **302**. The gradually reducing cross sectional area of the inlet portion **300** is provided to effect an increase in velocity of flow as the air reaches the throat portion and the discharge portion **301** restores the air to its former pressures and speeds. The section of the wind tunnel shown may be connected in the usual recirculating air system employed for wind tunnel work.

The internal walls of the wind tunnel are provided with ring electrodes embodying the invention. These electrodes are arranged as shown in groups with increasing spacing in each group in the portion **300** toward the throat and decreasing spacing in each group in the portion **301** on the discharge side of the throat. Two groups of electrodes are shown at **303** and **304** in the inlet end of the tunnel and two additional sets **305** and **306** are visible in the cut-away portion. The latter portions **305** and **306** show the progressive change in spacing of each group of electrodes with the changes in the throat cross sectional area. FIG. 65 is an enlarged sectional view of a portion of the throat along the line **65—65** of FIG. 64 showing a set of electrodes **307** and a portion of the set **305**. It will be noted that the electrodes are of the same general type as those indicated in the modification of the invention shown in FIG. 4 except that the length of the electrodes in the direction of fluid flow and their spacing is varied along the wall in the direction of fluid flow. The spacing of the electrode elements of each group is increased as the section of the wind tunnel decreases; after passing the throat the spacing decreases as the tunnel cross sectional area increases. The several sections of the electrode excitation system in the wind tunnel may be separately excited and connected to different frequency alternating current systems so that the resonant velocity of the fluids passing over the electrodes may be increased over the throat of the tunnel and decreased thereafter. Thus the rate of flow of the fluids along the inner walls of the tunnel may be controlled by changing the frequency of the alternating potential impressed on one group with respect to that of the next. In order to maintain the flow through the wind tunnel at the desired high velocities and at the same time with minimum turbulence, the rate of flow of the fluid is varied generally in inverse proportion to the cross sectional area; for an application such as that illustrated, the rate of flow is controlled so that the product of the cross sectional area and the velocity of the fluid is substantially constant at all points along the wind tunnel. In some applications it is found advantageous to progressively decrease the product of the flow velocity times the cross sectional area along the flow path through the wind tunnel. By proper adjustment of this system the fluid such as air may be caused to flow at high velocity through the throat of the tunnel with minimum turbulence.

The term "charged particles" as used herein has reference to any particles regardless of size which are attracted or repelled by an electric charge and are influenced by and may be moved by electric fields; thus the term has reference to ions in gases and liquids regardless of how they exist or are produced, to charged particles of solid

322 || @HighEarthOrbit_ linktr.ee/Grider2

or liquid matter such as dust and water droplets, to colloidal electrolytes, to polarized particles such as water molecules, and many non-symmetrical polar organic molecules and to many other particles possessing these electrical propulsion properties.

The term "surface layer fluid flow" as used herein designates a flow of fluid in a layer or stratum adjacent, near or in contact with a surface.

The term "progressively changing potential" as used herein has reference to electric potentials in an electric field which change at each point with respect to adjacent points in the direction of the field in a manner such that, with respect to a charged particle moving in the field, either an essentially neutral potential or an attracting potential is maintained ahead of the particle. The term thus has reference to both direct current fields of increasing attracting potential and to alternating fields which produce true traveling waves and to other periodically varied fields which produce a traveling wave effect.

The term "corona discharge" as used herein has reference to the whole class of discharges requiring a voltage to produce or maintain ionization. Such discharges include corona, glow, arc and spark discharges.

The methods of producing fluid flow and the sustentation and propulsion methods of this invention may be employed in a wide range of applications; for example, they may be employed for various gaseous and liquid fluid handling systems and also for the propulsion and sustentation of a wide variety of self-propelled vehicles and other bodies. The vehicles such as aircraft and submarines may hover in one position for long periods or may move in any desired direction at low or high speeds.

Although this invention has been described in connection with its application to specific fluid flow systems and self-propelled vehicles, various other applications and embodiments will occur to those skilled in the art. Therefore, it is not desired that the invention be limited to the modifications illustrated and described and it is intended by the appended claims to cover all modifications which fall within the spirit and scope of the invention.

I claim:

1. A fluid moving system for producing substantially laminar flow of ambient fluid over and adjacent a substantially smooth surface exposed to the fluid which comprises a multiplicity of electrode elements mounted in spaced relationship to one another adjacent said surface and electrically insulated from one another and constituting a series of elements extending along a portion of the surface, means comprising a multiplicity of sharp points on predetermined ones of said elements oriented in the direction of flow of fluid over said elements for producing charged particles adjacent said predetermined ones of said elements, all of said sharp points for each of said elements lying substantially in a plane perpendicular to the direction of fluid flow and equidistant from the next element in the direction of flow whereby the production of charged particles by a corona-type discharge is facilitated at each of said sharp points, electric exciting means connected with said electrode elements for producing progressively changing electric potentials along said surface thereby creating an electric potential field for propelling charged particles dispersed in the ambient fluid progressively from one electrode element toward the next and inducing a surface layer fluid flow over said portion of the surface, certain of said predetermined elements comprising conducting bars having said sharp points arranged in two sets pointing in opposite directions, auxiliary electrodes spaced from said bars one on one side and one on the other of each of said bars, and switching means for selectively connecting each of said bars alternatively to the auxiliary electrode on either side thereof for reversing the direction of corona discharge and the direction of charged particle propulsion.

2. A fluid moving system for producing substantially laminar flow of ambient fluid over and adjacent a substantially smooth surface exposed to the fluid which comprises a multiplicity of electrode elements mounted in spaced relationship to one another adjacent said surface and electrically insulated from one another and constituting a series of elements extending along a portion of the surface, and electric exciting means connected with said electrode elements for producing progressively changing electric potentials along said surface thereby creating an electric potential field for propelling charged particles dispersed in the ambient fluid progressively from one electrode element toward the next and inducing a surface layer fluid flow over said portion of the surface, said exciting means comprising an alternating voltage source connected to excite said electrode elements successively to electric potentials at predetermined phase differences between adjacent electrodes for producing a traveling wave effect and for propelling charged particles dispersed in the fluid medium progressively along the surface at a resonant velocity which is substantially the velocity of the traveling wave effect and is dependent upon the frequency of the alternating voltage and the phase relationship between the potentials applied to adjacent electrodes and the spacing between electrode elements, said exciting means further including means for generating a first alternating voltage having an essentially square wave form and means for applying said first alternating voltage between every other odd-numbered electrode element in a series and means for generating a second alternating voltage having the same wave form voltage and frequency as said first alternating voltage but with its phase lagging approximately ninety degrees behind said first alternating voltage and means for applying said second alternating voltage between every other even-numbered electrode element in a series.

3. A fluid moving system as set forth in claim 2 wherein said means for generating said first and second alternating voltages comprises direct current sources of opposite polarity and switching means for applying periodic bursts of said voltages which thus constitute voltages of alternating square wave form.

4. A fluid moving system as set forth in claim 3 including means dependent upon the opening of said switching means for forming a short high-voltage pulse and impressing said pulse on the square wave voltages at predetermined points thereon.

5. A fluid moving system for producing substantially laminar flow of ambient fluid over and adjacent a substantially smooth surface exposed to the fluid which comprises a multiplicity of electrode elements mounted in spaced relationship to one another adjacent said surface and electrically insulated from one another and constituting a series of elements extending along a portion of the surface, and electric exciting means connected with said electrode elements for producing progressively changing electric potentials along said surface thereby creating an electric potential field for propelling charged particles dispersed in the ambient fluid progressively from one electrode element toward the next and inducing a surface layer fluid flow over said portion of the surface, said exciting means comprising an alternating voltage source connected to excite said electrode elements successively to electric potentials at predetermined phase differences between adjacent electrodes for producing a traveling wave effect and for propelling charged particles dispersed in the fluid medium progressively along the surface at a resonant velocity which is substantially the velocity of the traveling wave effect and is dependent upon the frequency of the alternating voltage and the phase relationship between the potentials applied to adjacent eelctrodes and the spacing between electrode elements, said system further including means for generating an alternating voltage having an essentially flat top wave form over a substantial portion of each half cycle and having a nearly zero voltage for an appreciable period between flat top portions, and means for superposing at a predetermined time on the flat top portion of each half cycle a high-voltage pulse of the

323 || @HighEarthOrbit_ linktr.ee/Grider2

same polarity as the flat top wave on which it is superposed.

6. A fluid moving system as set forth in claim 5 including means for adjusting the time of the high-voltage pulse with respect to the flat top wave form.

7. A fluid moving system as set forth in claim 5 including means for separately adjusting the voltage of the short pulse to control the production of charged particles in the ambient fluid.

8. A fluid moving system as set forth in claim 5 including means for separately adjusting the voltage of the essentially flat top portion to control the velocity of the charged particles and thereby synchronize their movement with the velocity of the traveling wave effect.

9. A fluid moving system as set forth in claim 5 including means for adjusting the length of the essentially flat top portion of each half cycle compared to the length of the nearly zero voltage portion, thereby affording an increase in efficiency by minimizing the capture of charged particles by electrodes and minimizing reversed propulsion of charged particles which get out of synchronization with the traveling wave effect.

10. A fluid moving system for producing substantially laminar flow of ambient fluid over and adjacent a substantially smooth surface exposed to the fluid which comprises a multiplicity of electrode elements mounted in spaced relationship to one another adjacent said surface and electrically insulated from one another and constituting a series of elements extending along a portion of the surface, and electric exciting means connected with said electrode elements for producing progressively changing electric potentials along said surface thereby creating an electric potential field for propelling charged particles dispersed in the ambient fluid progressively from one electrode element toward the next and inducing a surface layer fluid flow over said portion of the surface, said exciting means comprising an alternating voltage source connected to excite said electrode elements successively to electric potentials at predetermined phase differences between adjacent electrodes for producing a traveling wave effect and for propelling charged particles dispersed in the fluid medium progressively along the surface at a resonant velocity which is substantially the velocity of the traveling wave effect and is dependent upon the frequency of the alternating voltage and the phase relationship between the potentials applied to adjacent electrodes and the spacing between electrode elements, said alternating voltage source comprising a multiphase alternating voltage generator and wherein each successive electrode in the direction of fluid flow and connected to said source is excited at a voltage lagging the preceding excited electrode by a predetermined phase difference whereby excitation of said electrodes produces a true traveling wave having a velocity dependent upon the frequency of the source and the minimum distance between electrodes of the same phase relationship.

11. A fluid moving system as set forth in claim 10 including means arranged to change the minimum distance between excited electrodes of the same phase relationship for changing the velocity of the traveling wave.

12. A fluid moving system as set forth in claim 10 including means arranged to change the frequency of the alternating potential for changing the velocity of the traveling wave.

13. A vehicle for movement through an ambient fluid medium comprising a hollow ring-shaped body having walls of bluntly rounded cross-section about the central opening thereof and of tapering cross-section toward the outer periphery of the ring, the upper wall of said ring presenting a smooth surface, and means including a plurality of spaced electrode elements insulated from one another and mounted adjacent said smooth upper wall and an electric excitation system therefor for producing electric winds at high velocities in generally radial paths from the periphery of the ring inwardly over said surface and downwardly through the central opening of the ring, the winds passing downwardly through the central opening producing an upward thrust against the electrode elements about the central opening and the high wind velocity reducing the fluid pressure on the surface for facilitating the sustentation of said vehicle.

14. A vehicle as set forth in claim 13 wherein said electrode elements are in the form of segments of concentric circles of increasing length outwardly and are arranged to form a plurality of series of elements of a pie-shaped section.

15. A vehicle as set forth in claim 14 including means for controlling the energization of the electrode elements of each of said series of elements independently from those of the other series to facilitate the propulsion and guiding of said vehicle.

16. A vehicle for movement through an ambient fluid medium comprising a hollow body of general disc-like configuration and having a substantially smooth upper surface, and means including a plurality of series of spaced electrode elements insulated from one another and mounted adjacent the smooth upper surface of said body and an electric excitation system therefor for producing electric winds at high velocities across each of said series of electrodes along said surface, said wind producing means including a source of charged particles in massed volumes having high electrical charge density for supplying particles adjacent said surface, said series of electrodes being oriented to produce electric winds along paths substantially parallel to a diameter of said body from one edge to the opposite edge thereof whereby the reactive force produced against said electrodes is effective to urge said body in the opposite direction from that of the electric winds, said body including a hollow portion of ring-like configuration and a movable closure member for covering the central opening of the ring, electrode elements on said closure member, means for exciting the electrode elements on said member to produce an electric wind concurrently and in the same direction as the winds produced by said first-mentioned elements, means for moving said closure member outwardly to expose the central opening, and means for reversing the direction of flow of fluid produced by at least one of said series of electrode elements arranged to produce a flow outwardly from the center whereby a flow of fluid from the periphery inwardly toward the center and downwardly through said central opening is produced to facilitate sustentation of said vehicle.

References Cited in the file of this patent

UNITED STATES PATENTS

1,980,521	Hahn	Nov. 13, 1934
2,279,586	Bennett	Apr. 14, 1942
2,556,978	Pierce	June 12, 1951
2,623,465	Jasse	Dec. 30, 1952
2,624,281	McNally	Jan. 6, 1953
2,645,279	Rossmann	July 14, 1953
2,718,364	Crabtree	Sept. 20, 1955
2,765,975	Lindenblad	Oct. 9, 1956
2,925,214	Gurewitsch	Feb. 16, 1960
2,927,746	Mellen	Mar. 8, 1960
2,946,541	Boyd	July 26, 1960

FOREIGN PATENTS

1,031,925	France	Mar. 25, 1953

OTHER REFERENCES

Review of Scientific Instruments; Ionic Pump; vol. 25, No. 4; April 1954; pp. 389 and 390.

Rocket Propellants; by Francis A. Warren; Reinhold Publishing Company; 1958; (pp. 209 and 211 required).

Astronautics; Cesium-ion Propulsion; vol. 4, No. 10; October 1959; pp. 34, 35, 92, 94, 96 and 97.

ARS Journal; New Ion Source for Propulsion of Space Vehicles; vol. 29, No. 11; November 1959 (reference to article of 1956); pp. 868–869.

324 || @HighEarthOrbit_linktree/Grider2

US 20060072226A1

(19) United States

(12) Patent Application Publication

(10) Pub. No.: US 2006/0072226 A1

(43) Pub. Date: Apr. 6, 2006

St. Clair

(54) REMOTE VIEWING AMPLIFIER

(76) Inventor: **John Quincy St. Clair**, San Juan, PR (US)

Correspondence Address:
JOHN ST. CLAIR
52 KINGS COURT, 4A
SAN JUAN, PR 00911 (US)

(21) Appl. No.: **10/957,391**

(22) Filed: **Oct. 2, 2004**

Publication Classification

(51) **Int. Cl.**
G02B 1/00 (2006.01)

(52) **U.S. Cl.** **359/896**; 359/894

(57) **ABSTRACT**

An apparatus which enhances the ability of a person to perform remote viewing by connecting the human spiritual eye to the tetrahedral geometry of subspace.

325 || @HighEarthOrbit_ linktr.ee/Grider2

Figure 1

326 || @HighEarthOrbit_ linktr.ee/Grider2

Figure 2

327 || @HighEarthOrbit_ linktr.ee/Grider2

Figure 3

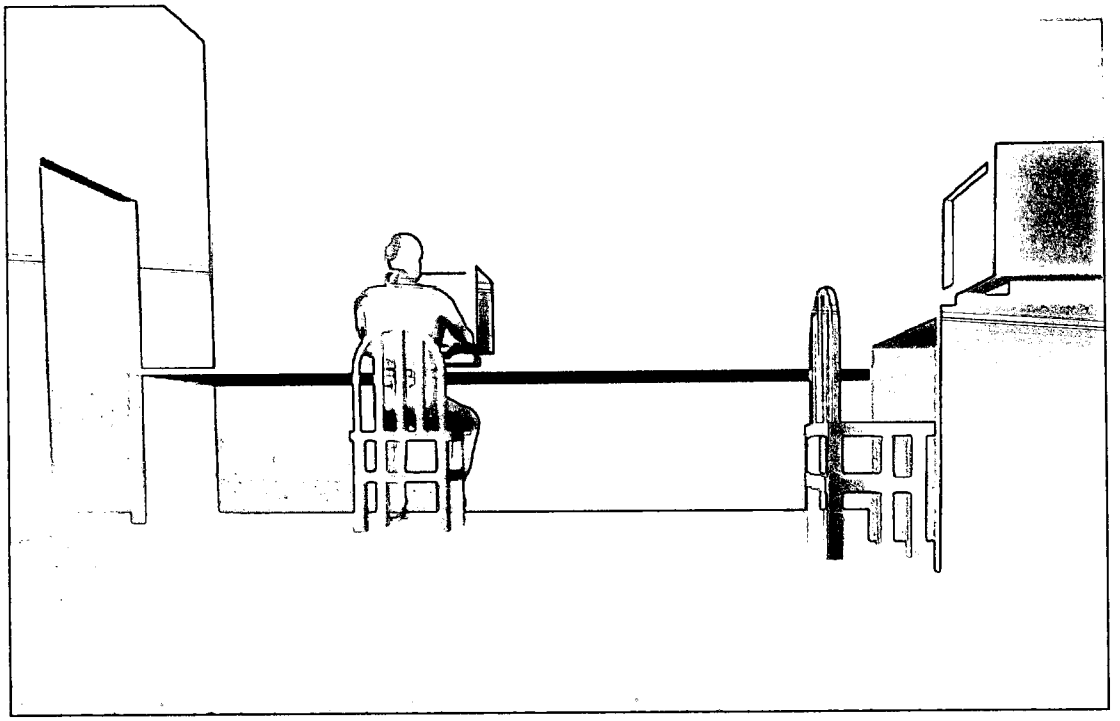

328 || @HighEarthOrbit_ linktr.ee/Grider2

Figure 4

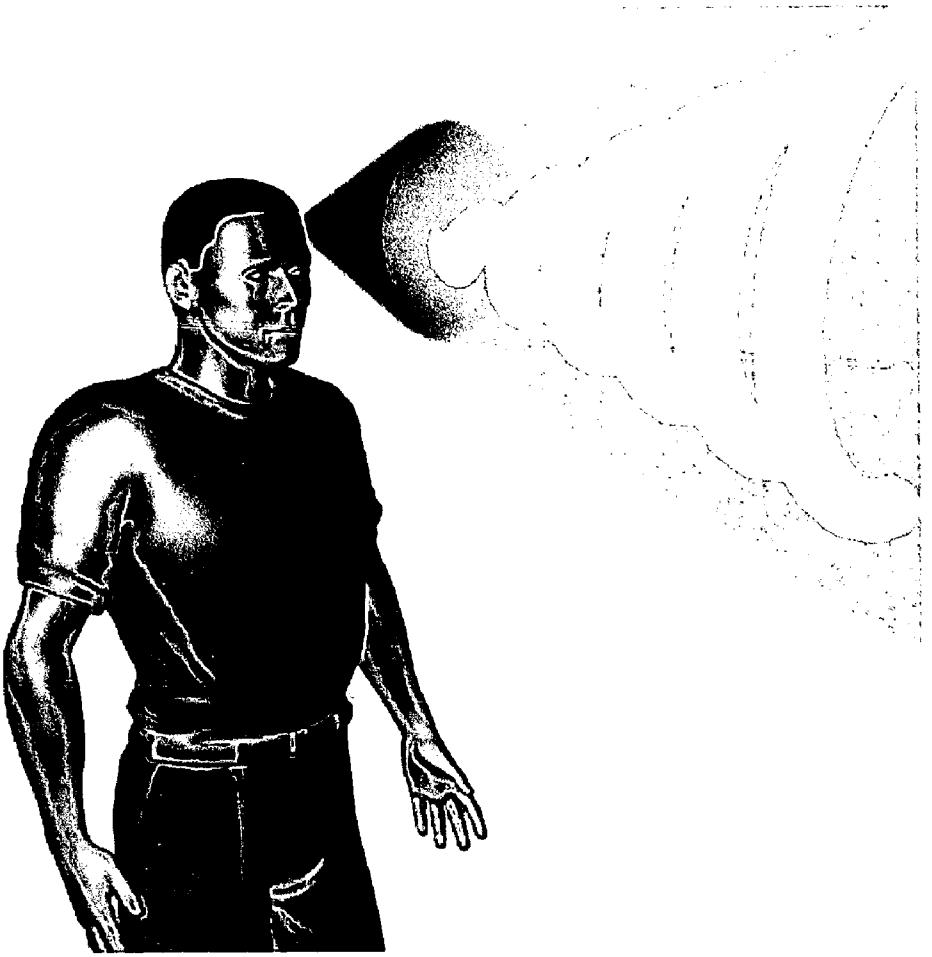

329 || @HighEarthOrbit_ linktr.ee/Grider2

Figure 5

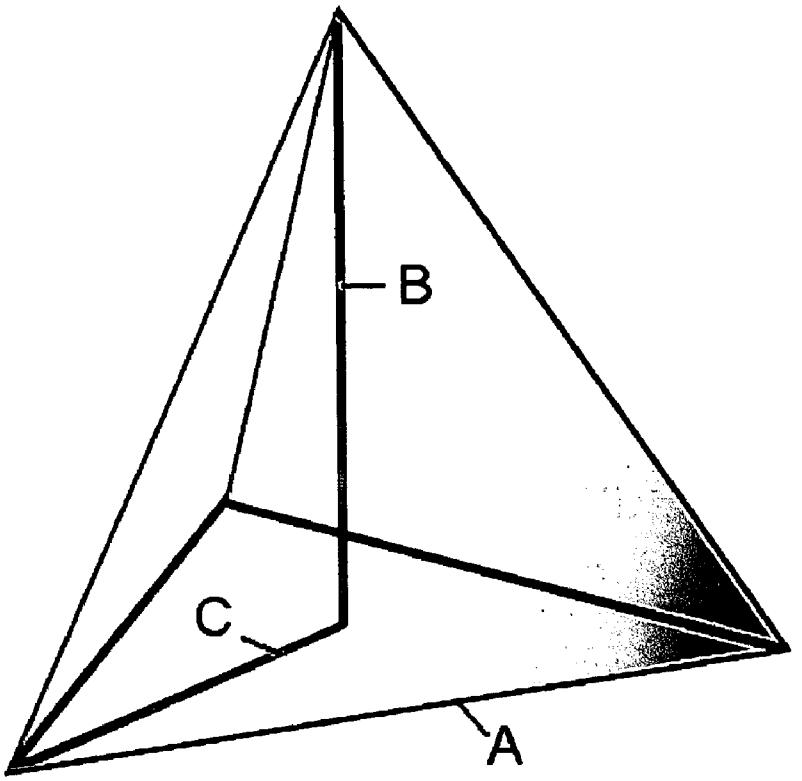

330 || @HighEarthOrbit_ linktr.ee/Grider2

Figure 6

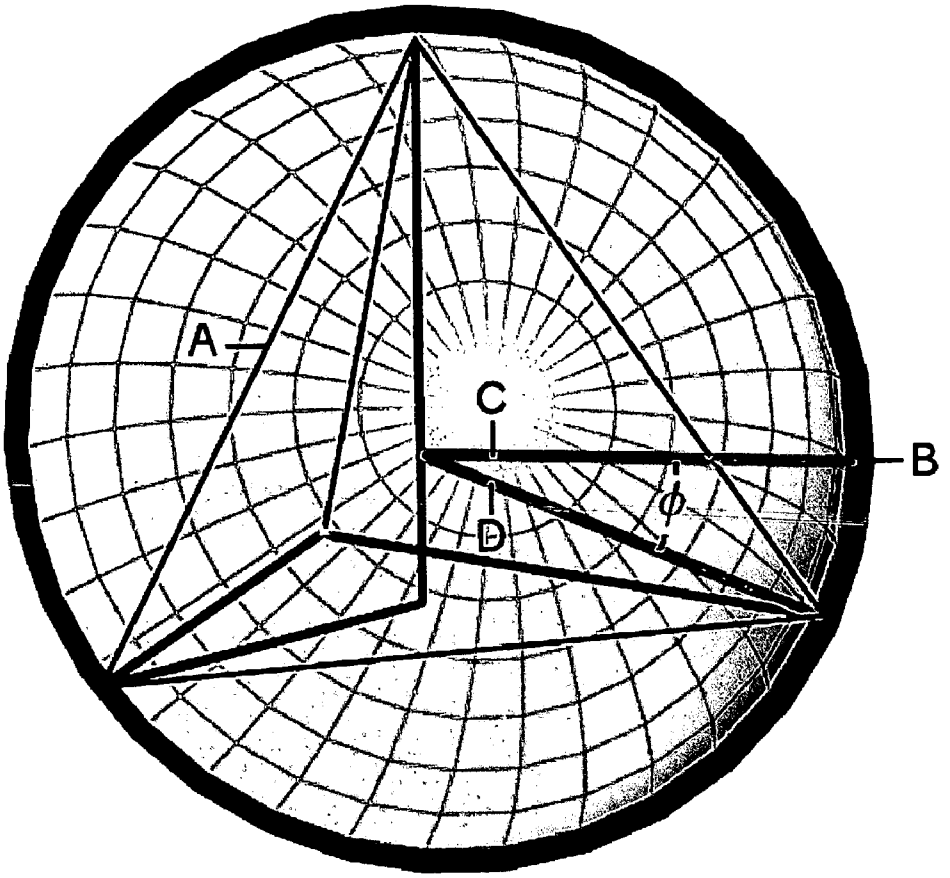

331 || @HighEarthOrbit_ linktr.ee/Grider2

Figure 7

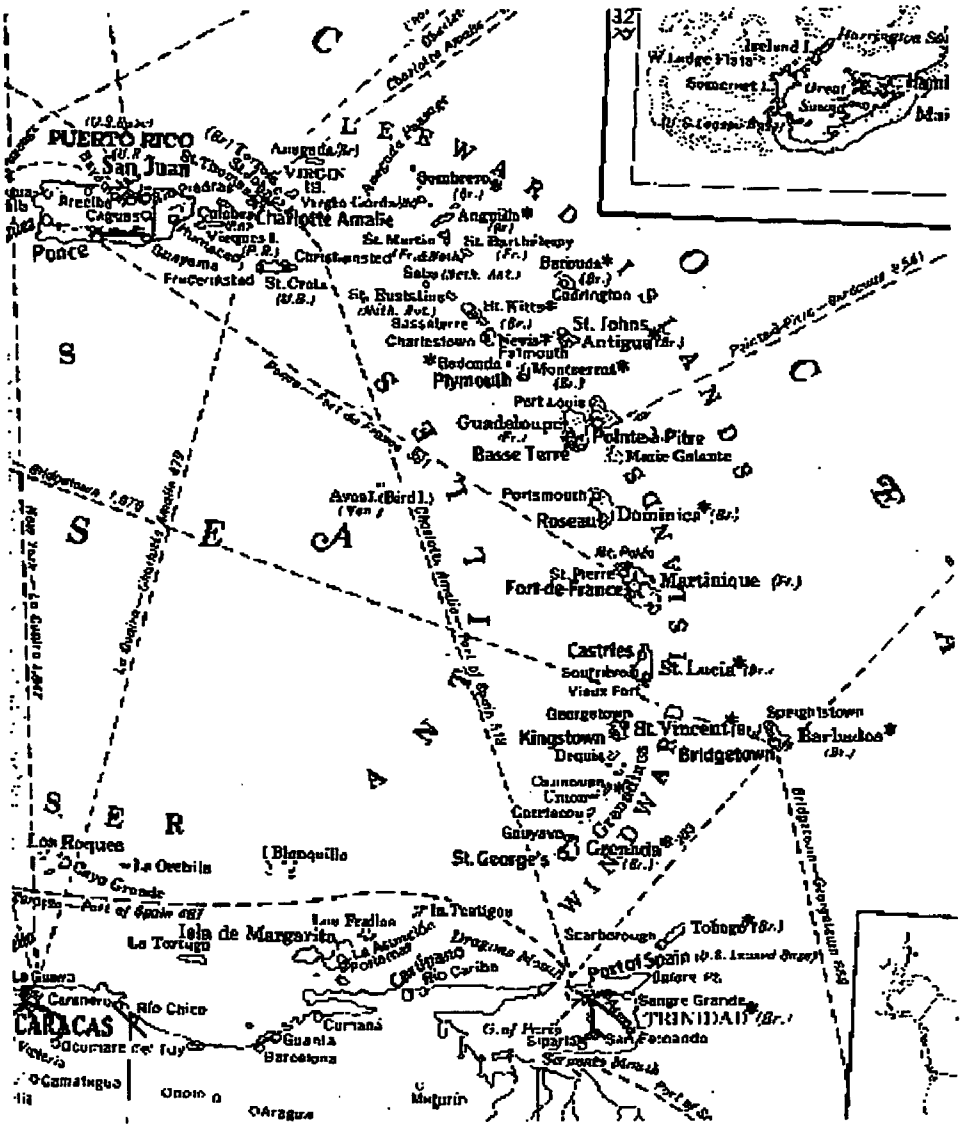

332 || @HighEarthOrbit_ linktr.ee/Grider2

Figure 8

333 || @HighEarthOrbit_ linktr.ee/Grider2

Figure 9

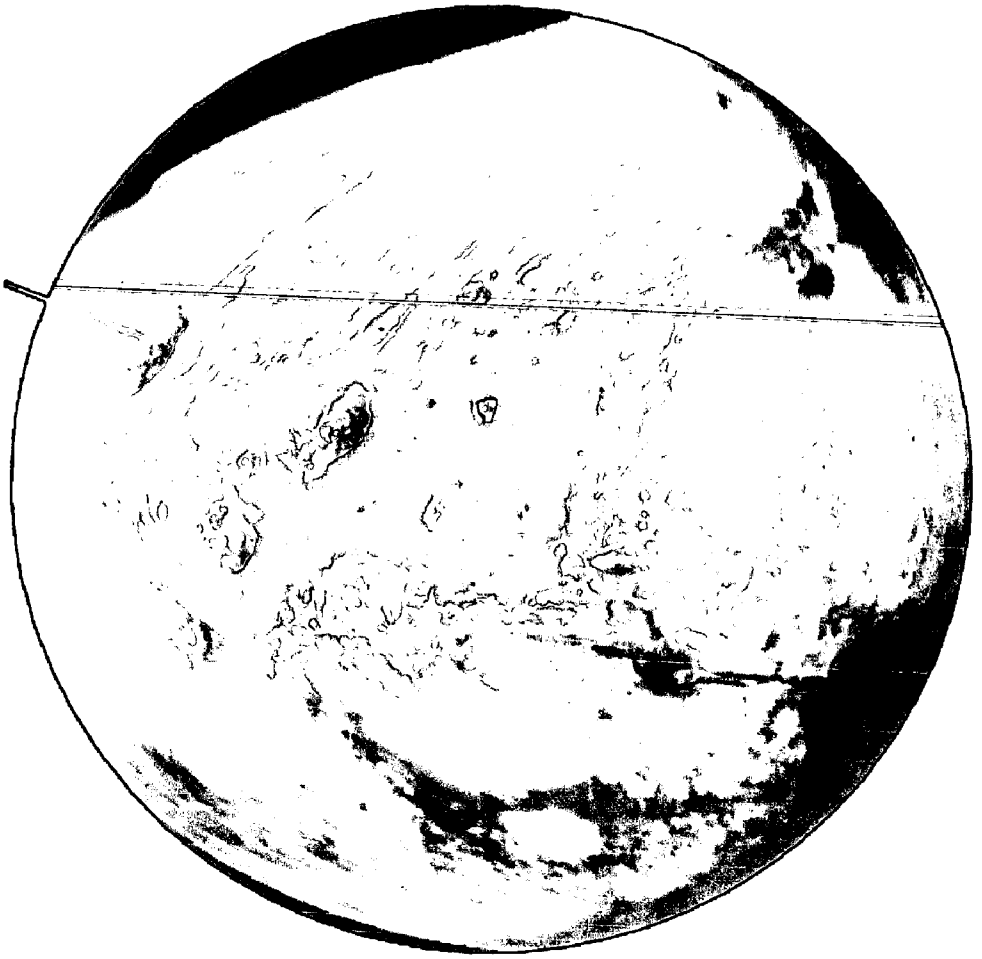

334 || @HighEarthOrbit_ linktr.ee/Grider2

Figure 10

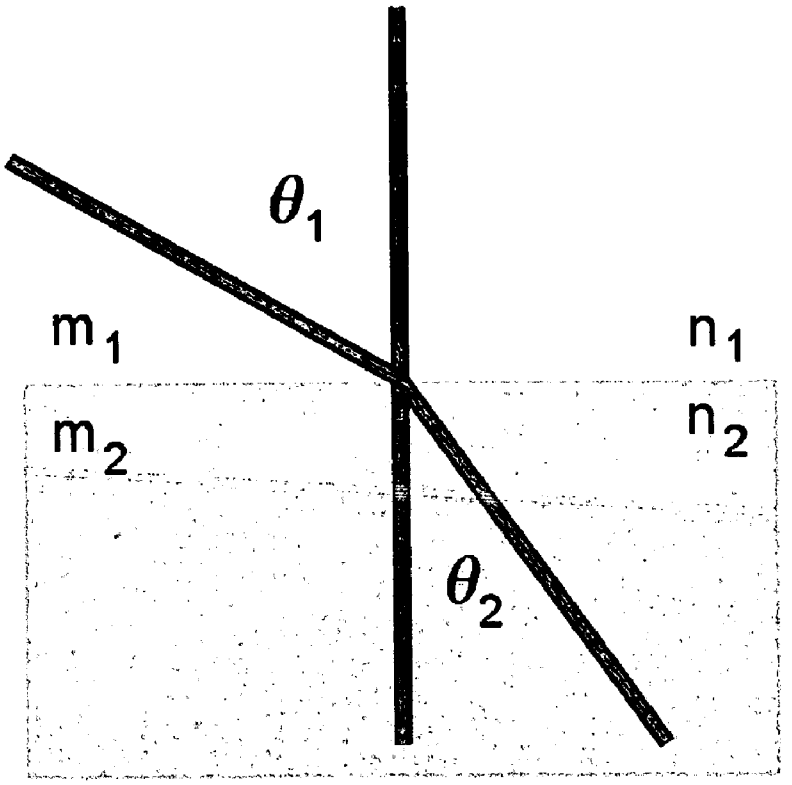

335 || @HighEarthOrbit_ linktr.ee/Grider2

Figure 11

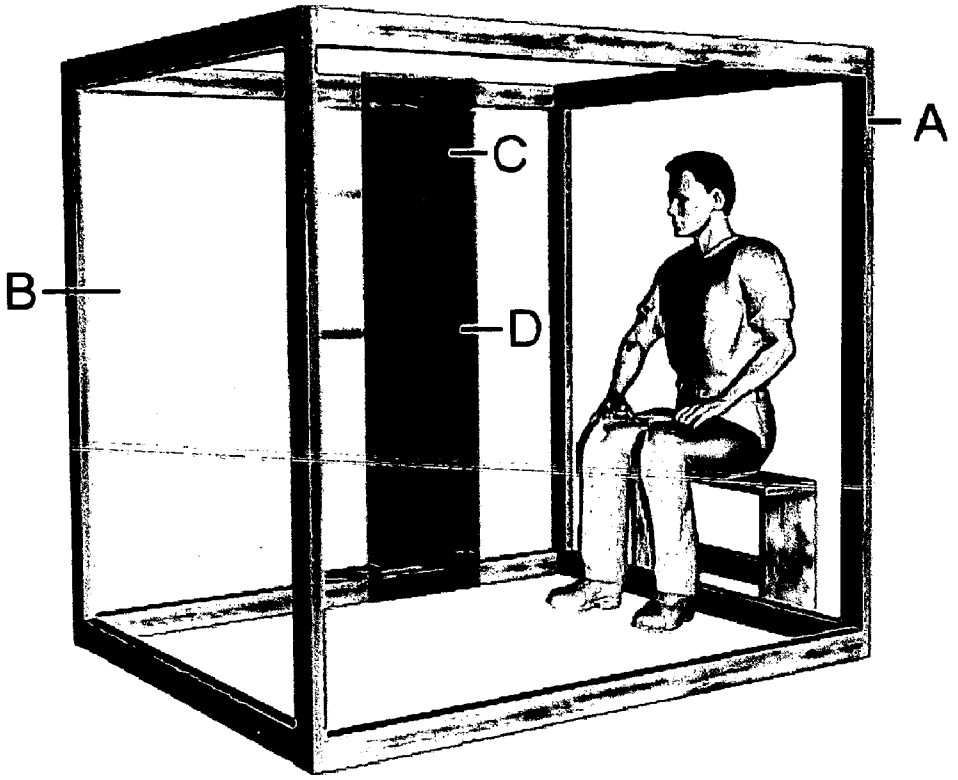

336 || @HighEarthOrbit_ linktr.ee/Grider2

Figure 12

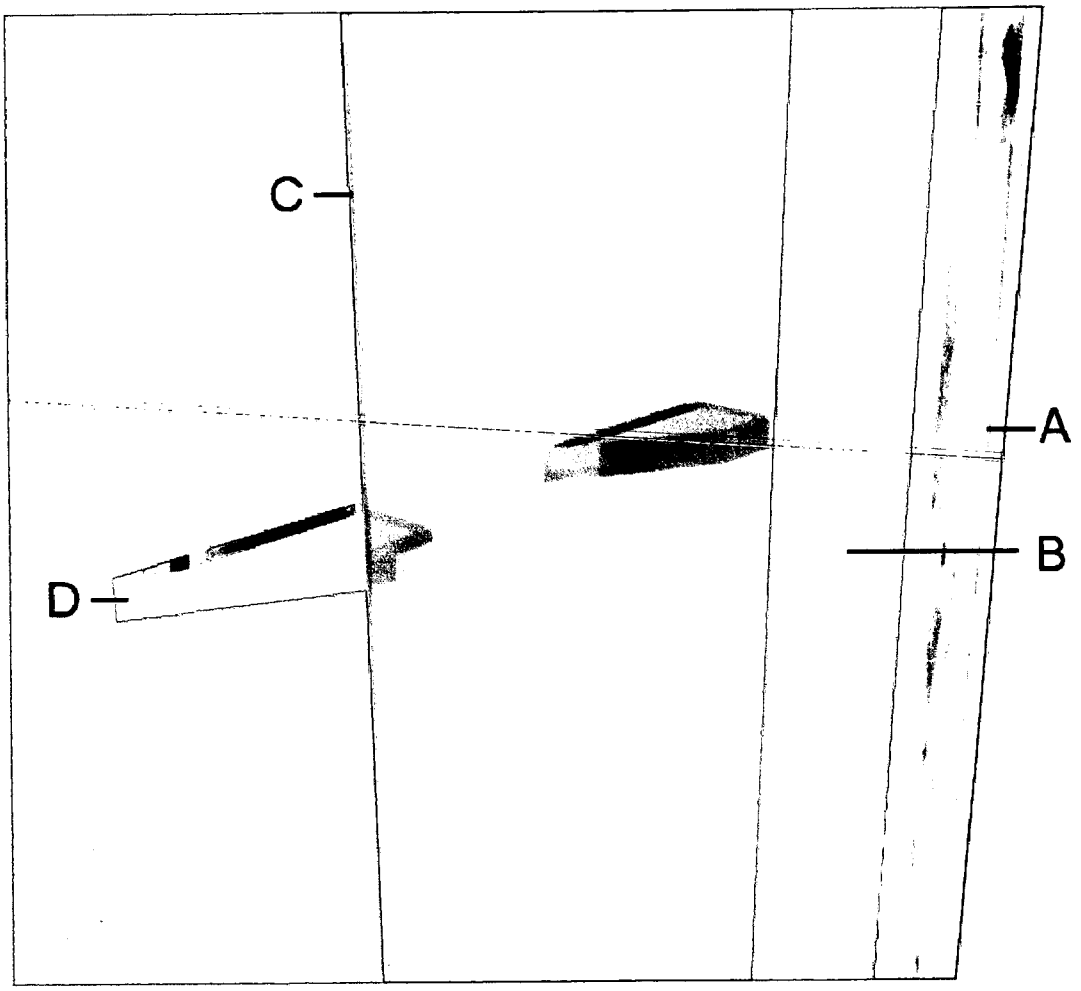

337 || @HighEarthOrbit_ linktr.ee/Grider2

Figure 13

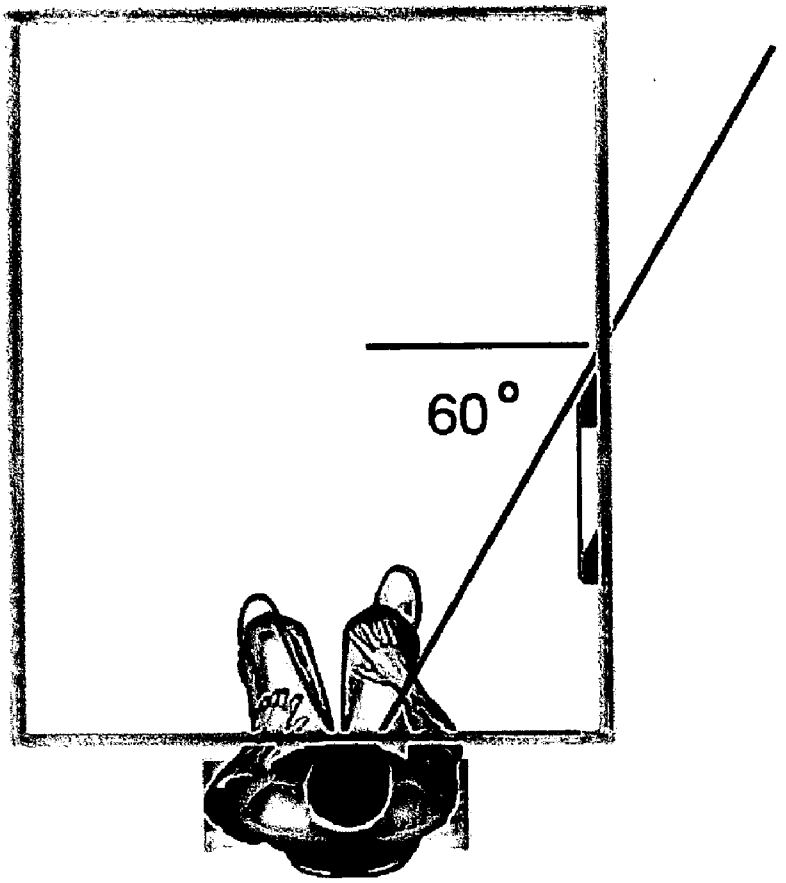

338 || @HighEarthOrbit_ linktr.ee/Grider2

Figure 14

339 || @HighEarthOrbit_ linktr.ee/Grider2

REMOTE VIEWING AMPLIFIER

BRIEF SUMMARY OF THE INVENTION

[0001] This invention enhances the ability of a person to perform remote viewing by connecting the spiritual eye to the tetrahedral geometry of subspace.

BACKGROUND OF THE INVENTION

[0002] Remote viewing is the projection of spiritual modules of the human energy field to distant locations in order to see, communicate and interact with other entities who live in subspace, space and hyperspace co-dimensions of the universe.

[0003] One of my first remote viewings was made at night to a distance of 10,000 miles on the sunlit side of the earth. My spiritual eye and body projected together while my mental facilities remained in my physical body. I found myself looking down on a palm tree from a height of about one hundred feet. The palm tree had several coconuts in it as seen in **FIG. 1**. I then gave the command to lower myself to the ground. At that moment I went sailing down past the coconuts, barely missing the tree! Finding myself on a pathway through the tropical forest, I then came to an extremely long wooden bridge which crossed over a river gorge. On the other side of the bridge I could see three soldiers running toward me as shown in **FIG. 2**. The two soldiers in front were carrying rifles and wearing light blue berets. The man running behind them was wearing an officer's cap with a red band. My first reaction was that I was going to be shot. I edged over on the right side of the wooden railing. They ran right past without seeing me. I then asked to see the building that these soldiers were guarding. Everything went dark, and then I found my spiritual eye peeking out of the floor of a computer room as seen in **FIG. 3**. There was one man using a computer on the opposite side of the room near an open door. He got up from his chair and came over to sit in front of a second computer located a few feet from where I was located. From the glare of the computer monitor, I could clearly see his face. Everything went dark as my spiritual eye and body projected back to my physical body.

[0004] Another time my spiritual eye, spiritual body and mind were standing outside the closed front door of my condominium. Upon patting my legs with my hands, I couldn't find the keys in my trousers. When I looked down, I realized I wasn't in my physical body. I then shot through two solid walls of concrete and returned to my awakening body.

[0005] What these two examples show is that the human spiritual energy system is modular. The reason it is modular is because there are seven hyperspace co-dimensions, each vibrating at a slightly different frequency, which receive energy from space through seven vortices located along the physical body. Over a lifetime, these vortices build up the human aura. Because all energy systems have to be grounded, the remaining six modules are the legs, body, arms/hands, voice, eye and mind. When the entire group is out-of-body as a single entity, then the soul energy powers the body in a manner similar to a battery. The soul looks like a two-inch diameter orange ball of plasma. If the soul is removed from the body, then the body becomes paralyzed except for a small movement of the eyelids. Upon death, all these separate modules are assembled into a single energy being. A light cord from the soul provides the battery power and information required to join these modules together. A second light cord from the pituitary gland transfers the modules into the energy being for assembly. This energy information transfer is the reason that people in a near-death situation say they saw their entire life flash before them.

[0006] Moving to a larger picture of things that are happening in the galaxy, I was able to make contact with the Pleiadian Federation which is located about 400 light years from earth. The Federation is a group of over one hundred intelligent beings that were brought to the Pleiades from around the galaxy. One member of the Federation calls itself the Intelligent Insect Beings. They are the ones who fly the black triangles over Belgium and France for the purpose of evacuating human beings back to the Pleiades for relocation on a planet called Earth II. The reason for this evacuation was that it was not known if it would be possible to win the battle of Revelations, which would take place about two years later here on earth.

[0007] As could be expected, the humans were angry and hysterical at being abducted. So the Intelligent Insect Beings asked me if I could calm them down. I was in telepathic communication with them, and they were in telepathic communication with their computer system, which meant that I could have my thoughts displayed to the humans on the computer monitor. It turned out that one woman was from Central America and only spoke Spanish. The Intelligent Insect Beings didn't speak Spanish so they thought there would be no way I could communicate with her. So I told them that I would spell the Spanish words letter-by-letter and she could then read my message. Since most Spanish people are Catholics, I thought a religious message would be of importance to her. I spelled out the phrase, "Que Dios te bendiga." which means, "May God bless you." I also asked the two beings to put their hands together in a form of prayer, and the woman followed suit. At that moment the Intelligent Insect Beings were reading her mind to understand her emotional state. They said, "She is crying tears . . . " After a slight but tense pause, they continued, "of joy!" They said the woman had a big smile on her face and was successfully transitioned into her new life.

[0008] One year later, the Blond Aliens of the hundred member council of the Pleiadian Federation remote viewed me so that I could celebrate with them the success of their mission to earth. The Blond Aliens, which is not their real name, fly the Beamship spacecraft. This hyperspace vehicle can teleport itself to any location in the galaxy. It dematerializes into the black void for an instance and then rematerialize anywhere in the galaxy. This ship can be seen in Billy Meier's video from Switzerland along with a picture of their envoy, Semjase.

[0009] Just recently I had a demonstration of the Beamship's ability. I heard an emergency distress call by a commander of a spacecraft who said that they had a fire onboard their spacecraft. I immediately remote viewed a Federation maintenance mothership, they got the frequency and location of the ship, and dispatched the Beamship in time to rescue the commander. The burned-out cables, which had caused the fire, were repaired by the Federation and the commander arrived home safely on his planet in his own spacecraft.

[0010] The Federation then received a message from the commander saying that he wanted his planet to join the Federation now that there was this type of communication available. So the Federation visited his planet for the signing ceremony, and I was invited to attend the proceedings by remote view. Word got around about this, and within three weeks another 20 planets joined the Federation for the same reason.

[0011] At one ceremony, which was attended by Admiral Third Class of the Pleiadian Defense Department, His Highness of the planet was signing the document of incorporation. At that moment, I could see him signing, so I exclaimed, "He is signing with his left hand." The Admiral was almost apoplectic at hearing this. After giving her the signed document, His Highness held up his hand and asked me how many fingers he was holding up. He had a fist so I said none. Then he put his index finger out and I said one. He then made a fist again and I said none. Then he held out all fingers and I said five. The Admiral said that he had a big smile on his face as he went to announce the agreement because he knew, even though his planet was located **90,000** light years away on the other side of the galaxy, he could instantly communicate any problems to the Federation. So this is the importance of developing inventions that can enhance our remote viewing ability because one day it will mean that we can become a vital part of the Pleiadian Federation.

SUMMARY OF THE INVENTION

[0012] Referring to **FIG. 4**, the spiritual eye of the human energy system is located at the pituitary gland in the forehead. It has the shape of a hollow cone which is composed of the misty white energy of hyperspace. Light coming into this vortex is then transferred by a light cord to a visual energy module which is located in a co-dimension of hyperspace. Because these modules are interconnected by light cords, the mind module is able to interpret the visual pattern the eye is seeing. More importantly, the mind can give logical instructions to this spiritual eye module for it to rotate around or move in a particular direction.

[0013] The reason that hyperspace has a white misty look to it is that the speed of light is very much less than the speed of light in our spacetime. The Lorentz transformation says that the distance L is shortened relativistically to a distance L' in a way related to the ratio of the velocity v of the object to the velocity of light c.

$$L' = L\sqrt{1 - \frac{v^2}{c^2}}$$

If the velocity of light is very low, then a small velocity creates an enormous contraction in length. By moving through hyperspace, therefore, enormous distances can be traversed. And this is the reason that it is possible to project the spiritual eye, voice and hearing to remote locations in the galaxy.

[0014] The universe is composed of subspace, space and hyperspace which are co-dimensions of each other. Subspace is defined by the geometry of the tetrahedron which is a four-sided solid whose faces are equilateral triangles having three 60° angles. Referring to **FIG. 5**, a tetrahedron whose sides are the square root of three (A), has a height of the square root of two (B), and base length equal to the square root of one (C). This forms the basic number set $\{\sqrt{1}, \sqrt{2}, \sqrt{3}\}$.

[0015] Referring to **FIG. 6**, the tetrahedron (A) is circumscribed by the sphere (B). Rod (C) is the sphere radius. A second rod (D), of equal length to rod (C), from the center of the sphere to the corner of the tetrahedron makes an angle ϕ of

$$\phi = \text{ArcSin}\left(\frac{1}{3}\right) = 19.47122063^\circ$$

So the four corners of the tetrahedron touch the sphere.

[0016] This tetrahedral geometry can be seen throughout the planets of the solar system Referring to **FIG. 7**, the islands of the Caribbean curve down from Puerto Rico to Venezuela forming an island vortex. The low density hyperspace energy releasing from the corner of the tetrahedron softens the rock mantle. The hot magma then rises through the rock with the least resistance. This creates a circular arc of volcanic islands along the edge of the vortex.

[0017] Referring to **FIG. 8**, the Giant Red Spot of Jupiter is located at a southern latitude of 19.5°. This vortex is so large that the entire earth can fit in it.

[0018] Referring to **FIG. 9**, the Olympus Mons volcano is located at a northern latitude of 19.5° as shown by the marker. This volcano is the size of France. Notice the fallen plume of volcanic debris toward the north east.

[0019] The double harmonic of the tetrahedral angle is twice 19.5° or 39° which is the location of the Silver Bridge in Point Pleasant, West Va. A large wormhole opened up around the bridge during Christmas rush hour when the bridge was full of cars. Due to the low density hyperspace energy, the rivets holding the cables down popped loose and all the cars were dumped into the river. A computer simulation using Schrodinger's quantum mechanics equation for a particle in a potential well shows that as the energy becomes less dense, the particle is no longer contained in the potential well. The electron jumps out. Thus the atomic bonds are broken which softens the rivets. This is the first time that there has been an understanding of the failure mechanism of this bridge.

[0020] After downloading from the Internet several pages of the index of refraction of a wide range of materials, I noticed that the index of refraction for Plexiglas was 1.50. Another source said it was 1.51. One of the Internet sites had a movable flashlight which showed the incident ray and the refracted ray. For Plexiglas, surprisingly enough, the incident ray was coming in at an angle of 60° to the normal, and the light was refracted at 35.26°, both of which are tetrahedral angles. The angle of the equilateral face of the tetrahedron is of course 60°. The angle at the top of tetrahedron is the arc-cosine of the ratio of the height over the edge length.

341 || @HighEarthOrbit_ linktr.ee/Grider2

$$\theta = \text{ArcCos}\left(\frac{\sqrt{2}}{\sqrt{3}}\right) = 35.26^\circ$$

According to Snell's law, the index of refraction n, times the sine of the angle $\sin(\theta_1)$ of the ray leaving material m_1, is equal to the index of refraction n_2 times the sine of the angle of refraction $\sin(\theta_2)$ of the ray entering material m_2. Referring to **FIG. 10**, the equation is

$$n_1 \sin(\theta_1) = n_2 \sin(\theta_2)$$

The index of air n_1 is equal to one. The index n_2 of Plexiglas is 1.50. If the incident ray is at $\theta_1 = 60°$ to the normal, then the output angle is

$$\theta_2 = \text{ArcSin}\left[\frac{n_1}{n_2}\text{Sin}(\theta_1)\right] = \text{ArcSin}\left[\frac{2}{3}\frac{\sqrt{3}}{2}\right] = 35.26^\circ$$

which is equal to the angle of the tetrahedron.

[0021] Then I recalled several months earlier that I had gone to the Subway restaurant to get a sandwich. I was sitting by the Plexiglas window communicating with the Admiral whose mothership was in earth orbit. She mentioned that they were bringing two people aboard. At that moment I looked out through the window and I could see both of them clearly and easily through my spiritual eye. To my amazement, I saw both of the captives start to pull out guns from behind their backs. I then projected by spiritual hands which resulted in preventing the attack on the security guards. To say the least, the Admiral was rather surprised at these events. She then asked me to look at the design of the window because she thought it had something to do with my enhanced remote viewing capabilities. Looking at the Plexiglas, I noticed that on the edge of the large window pane there was a shorter piece of Plexiglas which was mounted parallel to the window pane. This smaller panel acted to protect the yellow neon fluorescent tube. I took the measurements of the design using a piece of paper that I found near the table.

[0022] I then went home and designed up a mounting bracket with my 3D computer software. I had already installed the stereolithography software that converts the design to the *.STL file format. How stereolithography works is that it slices the design into many thin horizontal sections. The machine has a platform which is mounted in a bath of liquid polymer. An ultraviolet laser, mounted on an xy-table, then traces out the slice. Because the liquid polymer is light sensitive, it polymerizes immediately into solid plastic. Then the platform is lowered a few thousandths of an inch and the second slice is added. This process eventually builds up the complete 3D part. Using the Internet, the *.STL file is sent by e-mail to the stereolithography service provider who returns the part overnight. So the next day I had the piece from which I made a plastic mold and several additional pieces for mounting the Plexiglas bracket on a full sheet of Plexiglas that I ordered locally. It never occurred to me to measure the angles, so after I got the index of refraction for Plexiglas, I measured the incident angle and it turned out to be 61°. So then I realized that the spiritual eye was being diffracted across these two Plexiglas plates which connected it to the tetrahedral geometry of subspace. Because subspace is the foundation of space, this created a much more efficient route for remote viewing. The result is that this invention has allowed me to make contact with 430 alien civilizations. Since then I have been awarded the Aphysics prize for my work in the invention and elaboration of the tetrahedron diagram of which there are now over 4000 graphs. The scientific discoveries contained in the diagram are (1) the electron and proton are one and same particle, (2) the existence of hyperspace, (3) how mass can be taken out of dimension, (4) cosmology determines the elementary particles, (4) all the physics constants and the tetrahedral geometry are contained in the two 360° circles of the infinity symbol and (5) all the physics constants are determined geometrically and projected from a subspace manifold into our dimension. For my work in Revelations, I was awarded four beautiful galloping riderless white horses of the Apocalypse.

A BRIEF DESCRIPTION OF THE DRAWINGS

[0023] **FIG. 1**. Remote viewing the top of a palm tree containing several coconuts.

[0024] **FIG. 2**. Remote viewing three soldiers running across a wooden bridge.

[0025] **FIG. 3**. Remote viewing computer building that soldiers were guarding.

[0026] **FIG. 4**. Spiritual eye of human aura.

[0027] **FIG. 5**. Tetrahedron.

[0028] **FIG. 6**. Tetrahedron circumscribed by sphere.

[0029] **FIG. 7**. Caribbean volcanic island vortex.

[0030] **FIG. 8**. Giant Red Spot on Jupiter.

[0031] **FIG. 9**. Olympus Mons volcano on Mars.

[0032] **FIG. 10**. Snell's Law of Refraction.

[0033] **FIG. 11**. Perspective view of remote viewing station.

[0034] **FIG. 12**. Wedge-shaped spacers for diffraction panel.

[0035] **FIG. 13**. Remote viewing angle.

[0036] **FIG. 14**. A remote viewing session taking place on a planet located 90,000 light years from earth on the other side of the galaxy showing His Highness signing with his left hand the document that allows his planet to become a member of the Pleiadian Federation.

DETAILED DESCRIPTION OF THE INVENTION

[0037] 1. Referring to **FIG. 11**, the remote viewing station is a rectangular box wooden frame (A) on which is mounted on one side a large sheet of Plexiglas (B). The diffraction panel (C), made of a shorter length of Plexiglas, is mounted with acrylic glue on the Plexiglas sheet using clear polyoptic molded plastic spacers (D).

[0038] Referring to **FIG. 12**, the wedge-shaped spacers (D) hold the diffraction panel (C) to the sheet of Plexiglas (B). The angle of the wedge is 30° which makes the incident angle 60° to the normal.

342 || @HighEarthOrbit_ linktr.ee/Grider2

[0039] Referring to the top view perspective **FIG. 13**, sitting on the wide bench, the remote viewer can adjust his sight along the wedge for proper alignment at an angle of 60°. Due to the 1.50 index of refraction of Plexiglas, the spiritual eye is diffracted across the edge of the first panel and then refracted across the second panel at the tetrahedral angle of 35.26°.

[0040] Referring to **FIG. 14**, the remote viewing image is seen superimposed on the large sheet of Plexiglas which acts as the viewing screen.

I claim:

1. A remote viewing station comprising:

(a) a rectangular box frame made of wood having a length of six feet, a width of four feet and a height of six feet;

(b) a large sheet of quarter inch Plexiglas, having an index of refraction of 1.50, mounted on the right side of item (1a);

(c) several wedge-shaped clear plastic spacers, three inches in width and eight and a half inches in length, having a wedge angle of 30° that are mounted on the interior right side of item (1b);

(d) a shorter sheet of quarter inch Plexiglas, having a length of one and a half feet, mounted on item (1c) parallel to item (1b);

(e) a wide bench on which the remote viewer sits so that the remote viewer can align his sight along the wedge angle of item (1c);

2. A remote viewing amplifier that:

(a) diffracts the spiritual eye of the remote viewer across the edge of item (1d) at an incident angle of 60° to the normal;

(b) refracts the spiritual eye at 35.26° to the normal due to the refractive index of item (1a) according to Snell's Law of Refraction; and

(c) aligns the spiritual eye with the tetrahedral geometry of subspace due to the diffraction/refraction combination of item (2a) and (2b).

* * * * *

343 || @HighEarthOrbit_ linktr.ee/Grider2

March 7, 1961 N. C. PRICE 2,973,921

WINGLESS SUPERSONIC AIRCRAFT

Filed March 24, 1958 5 Sheets-Sheet 1

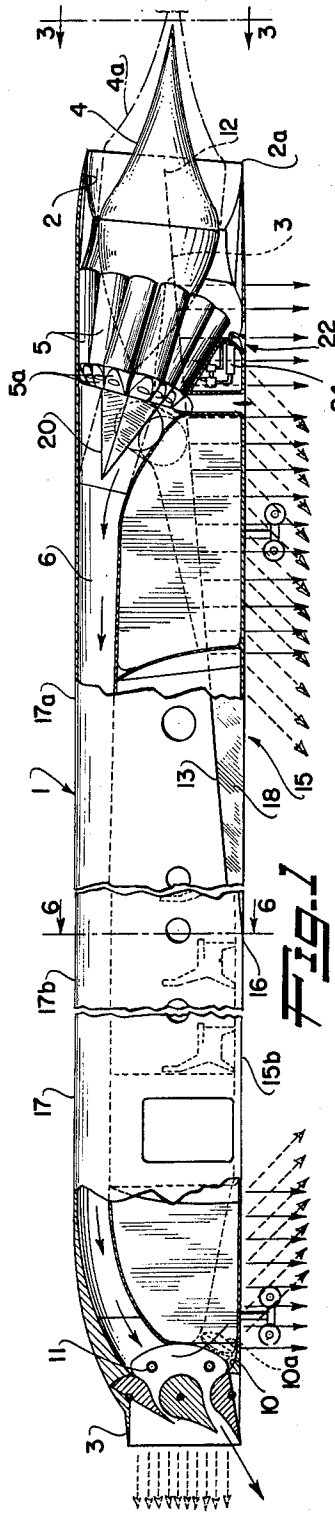

FIG. 1

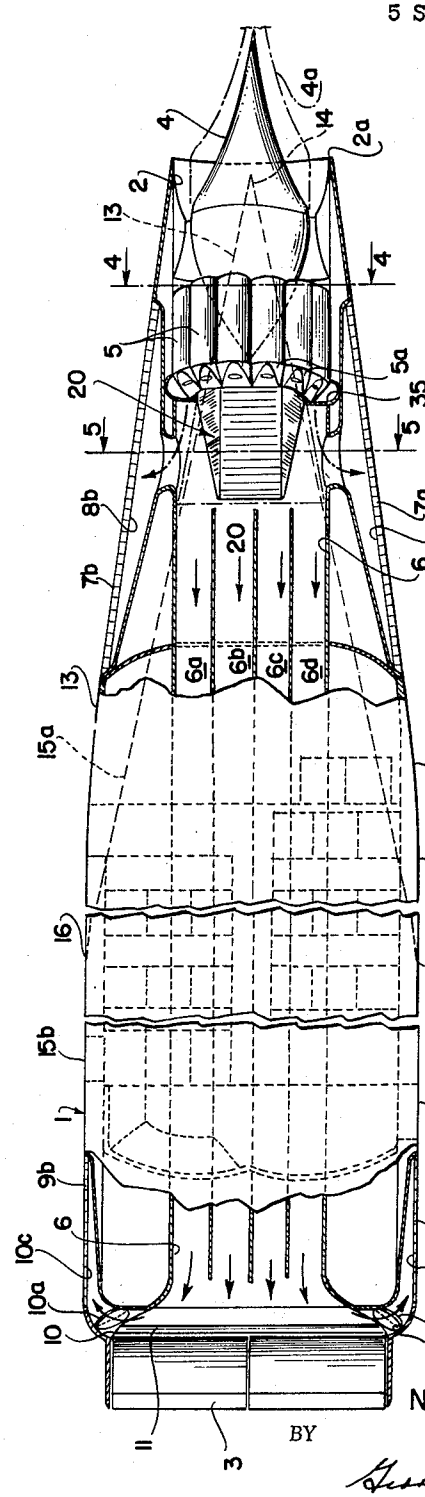

FIG. 2

INVENTOR.
NATHAN C. PRICE
BY
George C. Sullivan
Agent

344 || @HighEarthOrbit_ linktr.ee/Grider2

March 7, 1961 N. C. PRICE 2,973,921

WINGLESS SUPERSONIC AIRCRAFT

Filed March 24, 1958 5 Sheets-Sheet 2

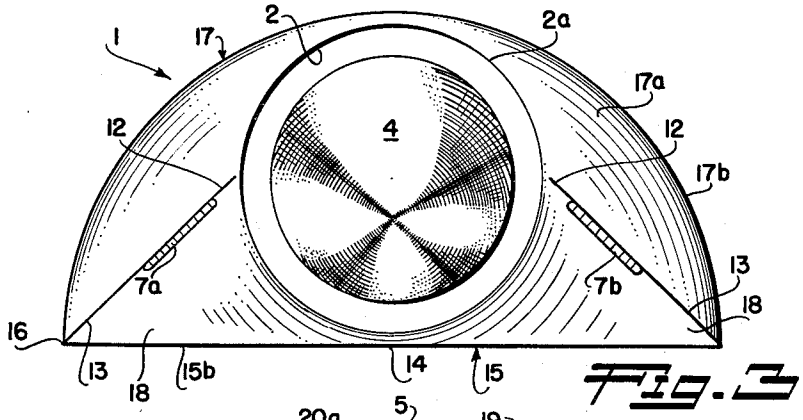

Fig. 3

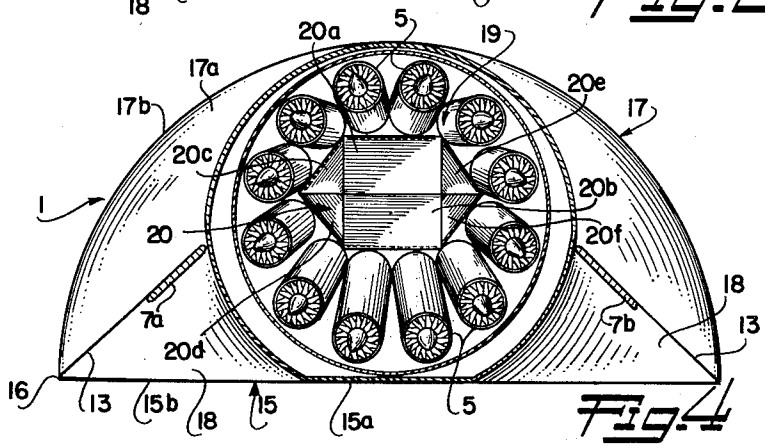

Fig. 4

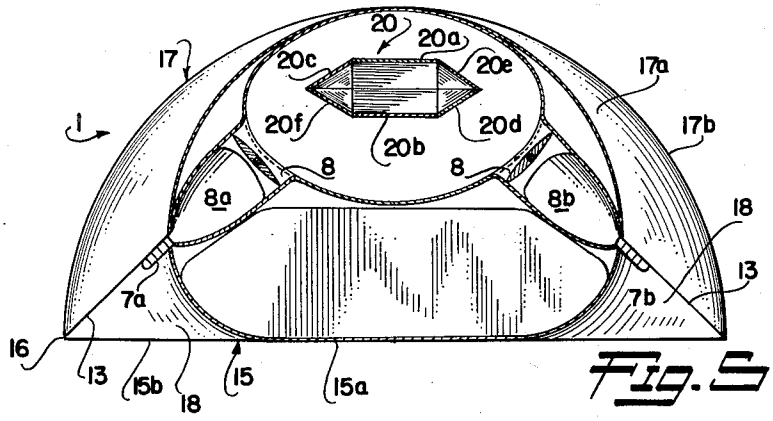

Fig. 5

INVENTOR.
NATHAN C. PRICE

BY

George C. Sullivan
Agent

345 || @HighEarthOrbit_ linktr.ee/Grider2

March 7, 1961 N. C. PRICE 2,973,921

WINGLESS SUPERSONIC AIRCRAFT

Filed March 24, 1958 5 Sheets-Sheet 3

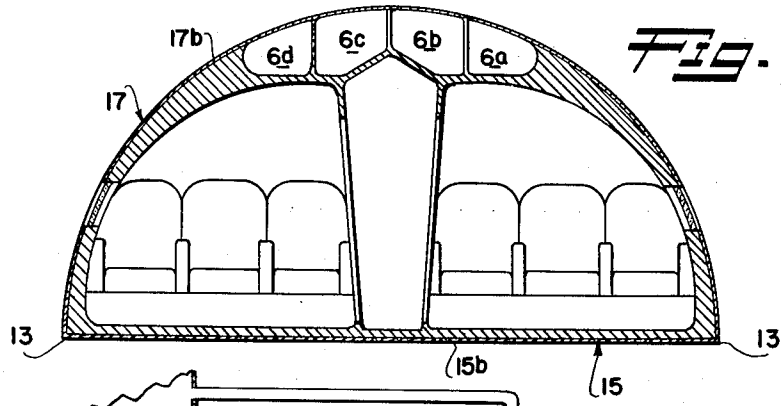

Fig. 6

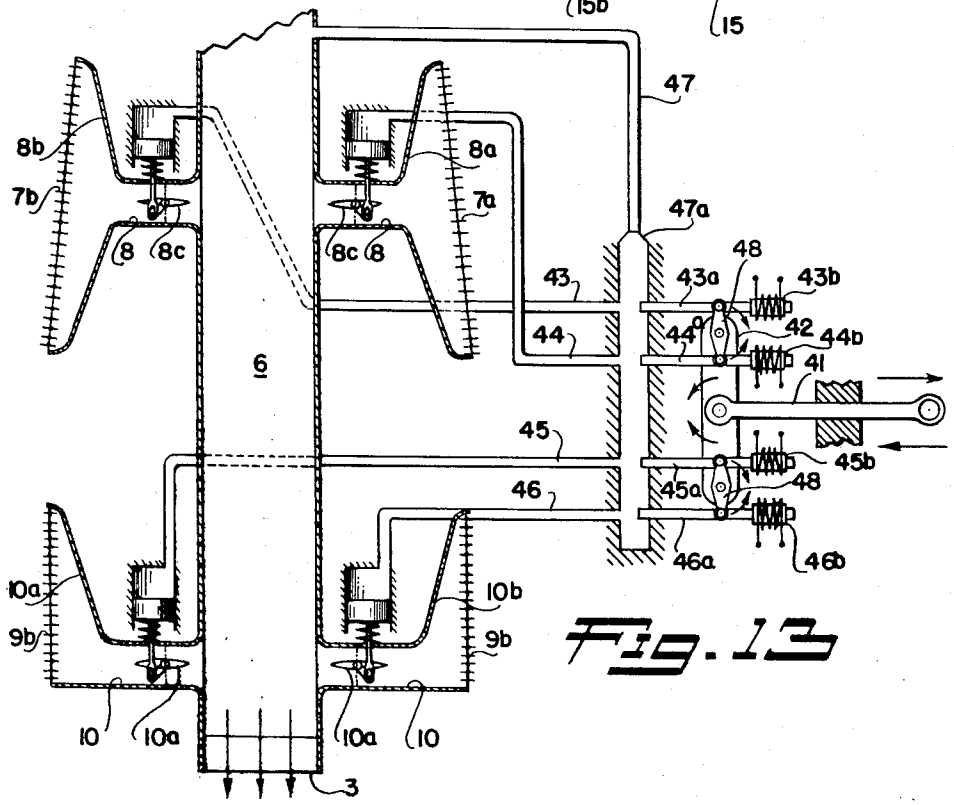

Fig. 13

INVENTOR.
NATHAN C. PRICE
BY
George Sullivan
Agent

346 || @HighEarthOrbit_ linktr.ee/Grider2

March 7, 1961 N. C. PRICE 2,973,921

WINGLESS SUPERSONIC AIRCRAFT

Filed March 24, 1958 5 Sheets-Sheet 4

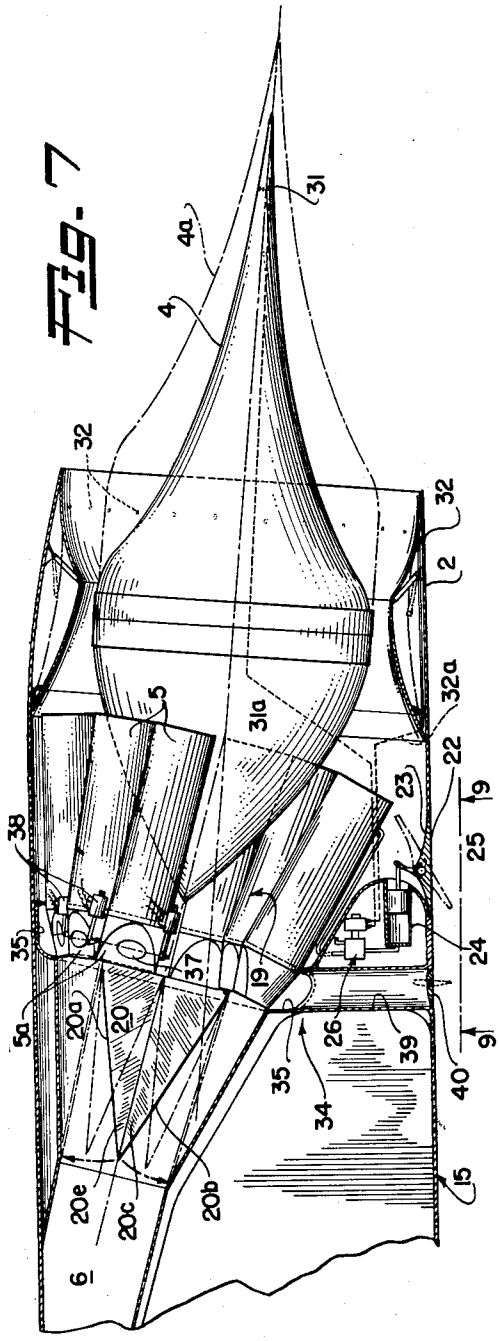

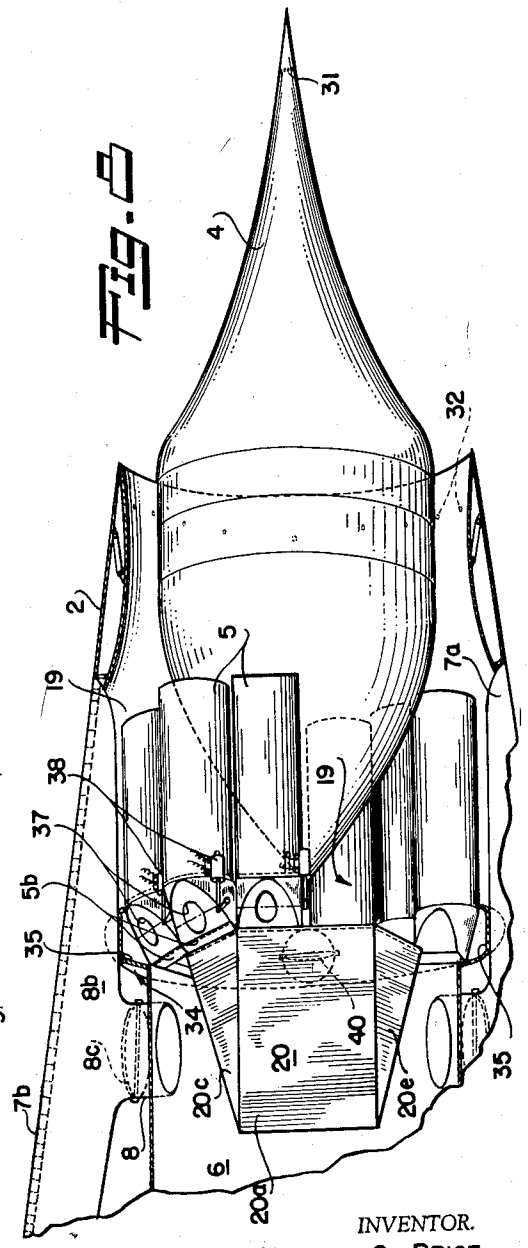

INVENTOR.
NATHAN C. PRICE

BY

George C. Sullivan
Agent

347 || @HighEarthOrbit_ linktr.ee/Grider2

March 7, 1961 N. C. PRICE 2,973,921

WINGLESS SUPERSONIC AIRCRAFT

Filed March 24, 1958 5 Sheets-Sheet 5

Fig. 10

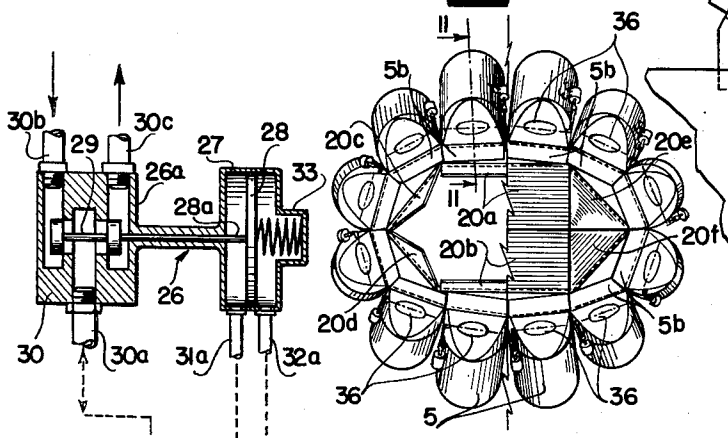

Fig. 11

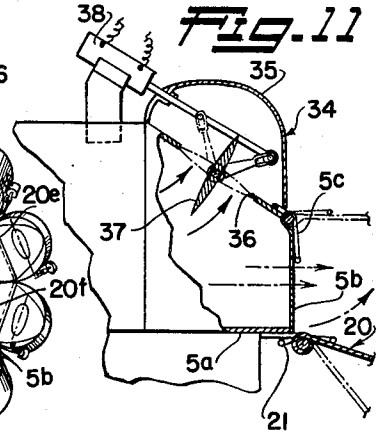

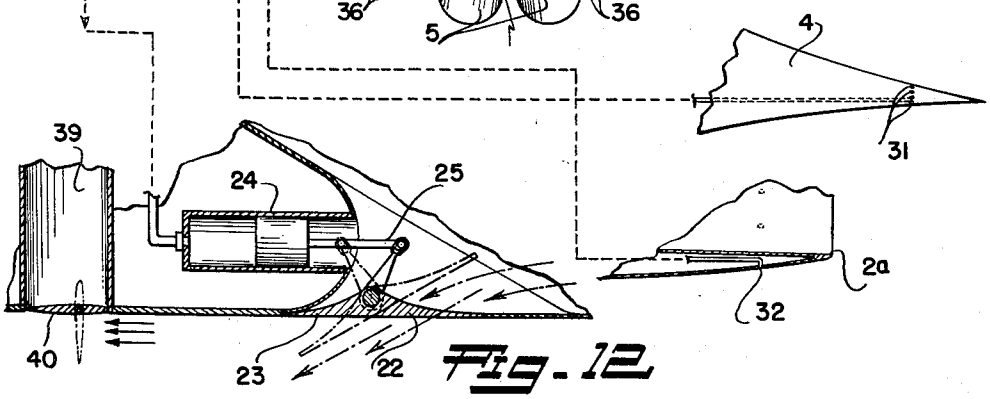

Fig. 12

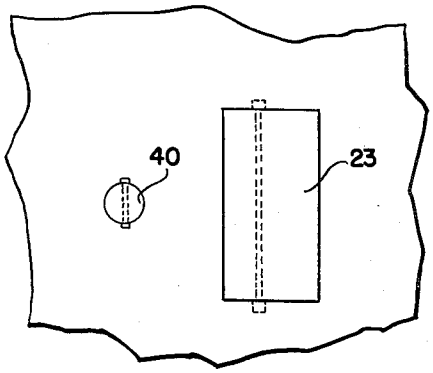

Fig. 9

INVENTOR.
NATHAN C. PRICE
BY
George C. Sullivan
Agent

348 || @HighEarthOrbit_ linktr.ee/Grider2

United States Patent Office

2,973,921

Patented Mar. 7, 1961

1

2,973,921

WINGLESS SUPERSONIC AIRCRAFT

Nathan C. Price, Geneva, Switzerland
(424¼ Kelton Ave., Westwood, Calif.)

Filed Mar. 24, 1958, Ser. No. 723,434

25 Claims. (Cl. 244—12)

This invention relates to a supersonic wingless aircraft, and relates more particularly to improvements in a supersonic wingless aircraft capable of vertical, or substantially vertical ascent or descent during takeoff and landing with efficient performance at low, intermediate and high altitude flights at subsonic or supersonic speeds combined with being economically advantageous for short, medium and long ranges.

The basic aircraft on which this invention is an improvement is covered by my copending application Serial Number 677,877, filed August 13, 1957. The main differences between this invention and my copending application resides in a more aerodynamically efficient fuselage shape in conjunction with a more positive, effective and efficient control of air in the propulsive system; the more aerodynamically efficient fuselage permitting a relocation of the jet efflux openings producing vertical lift and descent during VTOL operations and aircraft directional control, such relocation additionally resulting in reduction of the operational noise level of the aircraft.

Accordingly, it is an object of this invention to provide aircraft of the type described having a more aerodynamically efficient fuselage.

A further object of this invention is to provide aircraft of the type described with a fuselage having a higher L/D ratio at all flight speeds.

It is a further object of this invention to provide aircraft of the type described having a high utilization of volumetric capacity in a fuselage having an inherently high L/D ratio.

A still further object of this invention is to provide aircraft of the type described having a fuselage permitting shorter landing gear, a lower position of loading doors relative to the ground level, a lower aircraft center of gravity relative to the ground level, and a wider landing gear tread (the last two factors minimizing the danger or chances of rolling over in an emergency landing or while taxiing on the ground) without jeopardizing or reducing the fuselage L/D ratio at any flight speed.

A further object of the invention is to provide a more effective means of re-starting turbojets during flight, or of starting a turbojet when less than all the turbojets are operating.

Another object of this invention is to provide an aircraft of the type described having a more positive, effective and efficient propulsion system air control.

It is a still further object of this invention to provide an aircraft of the type described having a reduced operational noise level.

It is another object of this invention to provide an aircraft with an exceptionally high ratio of useful load to gross weight for economical operation at a wide diversity of short, medium, and long stage distances.

Other objects and advantages will become apparent from the following description taken in connection with the accompanying drawings in which:

Figure 1 is an elevation view of partial cross-section

2

of an aircraft showing one embodiment of this invention;

Figure 2 is a plan view of partial cross-section of the aircraft shown in Figure 1;

Figure 3 is a view taken along line 3—3 of Figure 1;

Figure 4 is a view taken along line 4—4 of Figure 2;

Figure 5 is a view taken along line 5—5 of Figure 2;

Figure 6 is a view taken along line 6—6 of Figure 1;

Figure 7 is an enlarged elevation view of partial cross-section of the forward portion of the aircraft shown in Figure 1, showing the ram inlet and powerplants in greater details;

Figure 8 is a plan view of partial cross-section of the portion of the aircraft shown in Figure 7;

Figure 9 is a view taken along line 9—9 of Figure 7;

Figure 10 shows the engine cluster and ram air passage from a downstream point looking forward, which is opposite of the engine cluster and ram air passage view in Figure 4;

Figure 11 is a view taken along line 11—11 of Figure 10;

Figure 12 is a diagrammatic view of the control system for the ram air spill gate; and

Figure 13 is a diagrammatic of the aircraft directional and vertical lift control system.

Generally stated, the invention is practiced in one embodiment by employing a fuselage that is substantially conical shaped at the forward end for a short length where the conical shape is transformed into a shape composed of two surfaces. The upper surface forms a semi-circular shape of increasing radius to a mid-length point of the fuselage, after which the semi-circular radius is substantially constant. The lower surface forms a flat triangle bounded laterally by slightly conical surfaces of decreasing radii in a rearward direction from the forward point or apex of the flat triangular surface to the point mid-length of the fuselage. The intersection of the upper and lower surfaces forms a chine-line on both sides of the fuselage extending from the sides of the inlet to the mid-length fuselage point. Angulated regions are formed by the chines, beneath which lateral extending, downward facing, vertical lift efflux nozzles or slots are placed without destroying the smooth external aircraft contour and forming spill-breakers to increase the inherent fuselage L/D ratio at all flight speeds. The aft end of the semi-circular or hemispherical transverse fuselage shape fairs into a rectangular assembly comprising a bi-lateral main propulsive nozzle for producing pitch, roll and yaw moments in the aircraft fuselage.

The sheet jet efflux from the nozzles or slots beneath the chines has a rapid rate of mixture with the ambient air resulting in relatively low operational noise levels comparative to circular nozzle openings of large diameter. Furthermore, these jet efflux sheets are characterized by noise of relatively high frequency, rather than low frequency, so that the noise attenuates rapidly with distance.

Included in the propulsion system air inlet is a ram air spill gate and a turbojet starting spill gate allowing an efficient disposal of excess ram air which produces lift, and without encountering spill at the air inlet entrance or lip and a less rigorous starting cycle for each of the turbojet powerplants without encountering possible back pressure damages. Spill is avoided to improve the L/D ratio of the airplane. Additional propulsion system fluid control means are included to provide a continuous smooth flow during either the turbojet or ramjet operating ranges.

Referring more particularly to the drawings, in Figure 1 there is shown an aircraft fuselage of some similarity to the basic aircraft shown in my copending application Serial Number 677,877, filed August 13, 1957. The

349 || @HighEarthOrbit_ linktr.ee/Grider2

fuselage 1 has a ram inlet 2 at the forward end thereof and a variable and controllable propulsive nozzle 3 at the aft end thereof. Ram inlet 2 is of the variable geometry type having an axially adjustable needle or spike 4 and a radially adjustable outer duct wall located therein. The position of needle 4 when extended is indicated by phantom lines 4*a* in Figures 1, 2 annd 7. Details of the ram inlet 2 just described form the subject matter of my copending application Serial Number 717,427 filed February 25, 1958.

Located in the diffuser portion of ram inlet 2 are a plurality of turbojet powerplants 5 which discharge combustion gases through turbojet exhaust nozzles 5*a* into a longitudinal duct 6 for passage aft through fuselage 1 to propulsive nozzle 3. Longitudinal duct 6 is preferably composed of a plurality of smaller longitudinal passages 6*a*, 6*b*, 6*c* and 6*d*, as is more clearly shown in Figures 2 and 6, to delimit or prevent swirl or eddies of the fluid flow through longitudinal duct 6, and to structurally contain the pressure of exhaust gases within an oblate cross-sectional area requiring less height than a purely circular one.

For vertical takeoff and vertical ascent and descent operation, there are forward and aft, downward-facing, elongated efflux nozzles along the chines of the fuselage. The right and left forward elongated efflux nozzles 7*a* and 7*b* respectively, are in communication with longitudinal duct 6 through lateral passages 8 and forward right and left chambers 8*a* and 8*b* respectively. The forward lateral passages 8 contain valves 8*c* for control of the reactive fluid to the forward elongated efflux nozzles 7 for vertical ascent or descent control.

The right and left rearward or aft elongated efflux nozzles 9*a* and 9*b* respectively are supplied with propulsive fluid from longitudinal duct 6 by rearward or aft lateral passages 10, which are controlled by valves 10*a* for controlling fluid flow from longitudinal duct 6 to right and left rearward or aft chambers 10*b* and 10*c* respectively, similar to the flow to the forward elongated efflux nozzles 7.

During high forward speed operation of the aircraft the turbojet powerplants 5 can be shut down and a ram air flow is maintainable without obstruction through longitudinal duct 6 for ram-jet operation. For such ram-jet operation there is a ram-jet burner means 11 interposed between the aft end of longitudinal duct 6 and propulsive nozzle 3.

Aerodynamically efficient operation of the aircraft is accomplished by the shape of the outer fuselage surface permitting an inherently high *L/D* (lift/drag) ratio at all stages of flight operation. Referring to Figures 1 through 6, the outer surface of fuselage 1 is substantially conical for a short distance from the lip 2*a* of inlet 2 to a point 12 where the chines 13 begin a sharp break in the smooth conical surface of the fuselage. Simultaneously with the beginning of chines 13 at point 12 there is a second point 14 which is the forward point or apex of a flat triangular surface 15*a* extending aft and forming the bottom surface 15 of the aircraft, which is composed of triangular surface 15*a* which extends rearward to a point 16 where the lower triangular fuselage surface 15*a* and chines 13 join at the lowermost horizontal plane of the fuselage 1. At point 16, the bottom triangular surface 15*a* also joins the bottom flat rectangular surface 15*b* of constant width as indicated in Figure 2, surface 15*b* extending in an aftward direction from point 16.

From point 12, the upper fuselage surface 17 extends rearward to point 16 as a cross-sectional hemispherical surface of increasing diameter or a semi-circular shape of increasing radius 17*a*, which changes to a semi-circular shape of constant radius 17*b* extending aft of point 16. Between forward points 12, 14 and mid-length fuselage point 16, the flat triangular surface 15*a* is bounded laterally by slightly conical surfaces 18, which are of decreasing radii in a rearward direction, surfaces 18 serving as a smooth lateral fillet between bottom triangular surface 15*a* and chines 13, the chines 13 serving as the point of intersection between the upper fuselage surface 17 and lower fuselage surface 15.

Thus, with the horizontal flat lower surface of the fuselage a shorter length landing gear can be utilized, in addition to the accomplishment of a lower relative position of loading doors to the ground level. Furthermore, a lower aircraft center of gravity relative to the ground level and use of a wider landing gear tread can be accomplished, which are both desirable and feasible from a safety aspect, without jeopardizing or reducing the inherent high *L/D* ratio in the fuselage or the high utilization of volumetric capacity of the fuselage as can be seen in Figure 6. The chines are instrumental per se in suppression of air spill upwardly from beneath the fuselage during flight.

The cluster of turbojet powerplants 5 are disposed adjacent the back portion of needle or spike 4 so as to create an envelope for forming a ram air bypass passage 19 between the outer surface of needle 4 and ring of turbojet powerplants 5. Communication between ram air bypass 19 and longitudinal duct 6 is effected by a petal valve 20 comprising two rectangular members 20*a* and 20*b*, and four triangular members 20*c*, 20*d*, 20*e* and 20*f*, all of which are pivotally connected substantially coplanar with the ends of the turbojet exhaust nozzles 5*a*. The inter-relation of the six members of petal valve 20 can be most clearly seen in Figure 5. The phantom lines for petal valve 20 as shown in Figures 1, 2 and 7 indicate the positions of the individual valve members when the petal valve 20 is open. Figure 10 shows the members of petal valve 20 from a view downstream of the valve looking forward; the valve members on the right hand side of Figure 10 being shown in the open position. Each of the members of petal valve 20 are biased toward a closed position, such as by a coil spring 21, as can be most clearly seen in Figure 11, although actually any satisfactory biasing means may be used.

At the downstream end of each turbo-jet exhaust nozzle 5*a* there is a swing type check valve 5*b* which is pivoted at its radially outer end to the turbo-jet exhaust nozzle 5*a*. Each of the turbo-jet swing check valves 5*b* is slightly biased toward a closed position by a coil spring 5*c* similar to the coil or bias spring 21 for biasing the members petal valve 20 shut. The biasing means 5*c* for the check valve 5*b* and the similar means 21 for the petal valve 20 are very low in force so that only negligible pressure of gases is required to open these valves.

During operation of the turbo-jet powerplants 5, the ram air bypass passage 19 is closed by petal valve 20, petal valve 20 remaining closed by the pressure of the turbo-jet powerplant combustion gases reacting on the outer or downstream surfaces of the members of petal valve 20.

During ram-jet operation when the turbo-jet powerplants 5 are shut down, the ram air from inlet 2 passes into longitudinal duct 6 through the ram air bypass passage 19 and petal valve 20. The swing check valves 5*b* on the turbo-jet exhaust nozzles 5*a* are maintained in a closed position by the pressure of the ram air downstream of the petal valve 20 reacting upon the downstream side of the swing check valves 5*b*. The spring bias means on each of the swing check valves 5*b* or members of petal valve 20 assist initially in urging the individual valve members toward a closed position so that the appropriate fluid pressures can come into play to close and maintain closed the individual valve members.

Referring to Figures 7 and 12, there is a ram air spill gate means 22 located in the lower portion of the fuselage surface at a point slightly behind the forward end of the cluster of turbo-jet powerplants 5. The ram air spill gate means 22 comprises a rectangular pivoted valve member 23 that is slightly unbalanced so that the air pressure within the ram inlet diffuser will tend to keep

350 || @HighEarthOrbit_ linktr.ee/Grider2

the valve closed. Pivoted valve member **23** is controlled by a pneumatic servo cylinder **24** connected to the valve member **23** by linkage **25** (see Figure 12). Control of pneumatic servo cylinder **24** is accomplished through an air relay servo control means **26**, the schematic details of which are shown in Figure 12. Control means **26** includes a casing **26***a* having a cylinder **27** adjacent one end thereof with a piston **28** therein. Extending from one side of the piston **28** is a rod or shaft **28***a* which in turn is connected to two-land servo-valve piston **29** whereby axial movement of piston **28** in cylinder **27** is translated to servo-valve piston **29** for controlling the entrance or exhaust of fluid pressure into pneumatic servo cylinder **24**. The air relay means **30** comprises conduit passages **30***a*, **30***b* and **30***c*; passage **30***a* connects the interior of air relay **30** with the interior of pneumatic servo-cylinder **24**, with passage **30***b* connected to any suitable source of fluid pressure, such as the subsonic diffuser section of the inlet, and passage **30***c* being connected to an atmospheric vent or exhaust. Position of the servo-valve piston **29** in the air relay **30** is controlled by the static pressure differential between a first set of pressure taps **31** located in a piezometer ring at the forward portion of the needle or spike **4** and a second set of pressure taps **32** located in a piezometer ring on the outer fuselage surface just downstream from inlet lip **2***a* and upstream from fuselage points **12** and **14**. Other locations of pressure taps **31** and **32** may be utilized, the only requirement being that pressure taps **31** are located so as to be responsive to substantially ambient pressure, while pressure taps **32** are located so as to be responsive to pressure variations occurring due to ram air spill over inlet lip **2***a*. Pressure taps **31** transmit the static pressure signal from pressure taps **32**. As soon as a condition of ram air spill over the inlet lip **2***a* occurs, the static pressure signal from pressure taps **32** will be greatly reduced, thus the static pressure signal level in conduit **31***a* will force piston **28** to overcome the bias of spring **33** and move forward, opening the pneumatic servo cylinder **24** to the atmospheric vent line **30***c* through air relay means **30**. When this occurs the ram air pressure in the inlet diffuser will react upon the forward surface of the piston in pneumatic servo cylinder **24** causing the pivoted valve member **23** to open and thus permit the ram air spilling over the inlet lip **2***a* to pass through the open ram air spill gate means **22**. When the static pressure signal levels from pressure taps **31** and **32** substantially balance out from the reduction of ram air spilling over inlet lip **2***a*, the spring **33** forces piston **28** in an opposite direction thus opening the closed side of the pneumatic servo-cylinder to the inlet diffuser pressure through conduit **30***b*, air relay means **30** and conduit **30***a* thus balancing the pressures on both sides of the piston in the pneumatic servo-cylinder **24**. With such pressures balanced, the unbalanced pressure on the pivoted valve member **23** will cause the valve member to close thus stopping the spill of ram air through the ram air spill gate means **22**. The control results in a condition of equilibrium with sufficient spillage through valve member **23** to prevent any substantial spill around the outside of inlet lip **2***a*, regardless of flight speed or altitude, and can compensate for stoppage of at least one powerplant should this occur during climb. The diagrammatic showing of control of the ram air spill gate means **22** as shown in Figure 12 is merely one embodiment thereof, it being understood that any appropriate control means capable of achieving the control effect of a ram air spill gate means can be used.

In order to accomplish the starting of a turbo-jet powerplant **5** at a time when less than all of the turbo-jet powerplants **5** are operating, a turbo-jet starting spill gate means **34** is incorporated by means of an annular connector ring **35** connected to a valved passage **36** in each of the turbo-jet exhaust nozzles **5***a* and controlled by a butterfly valve **37**. Each butterfly valve **37** is actuated by an electric solenoid **38**. The annular connector ring **35** communicates with an exhaust passage **39** that opens to the atmosphere at the lower portion of the fuselage just aft of the ram air spill gate **23**. An unbalanced butterfly valve **40** controls communication between the exhaust passage **39** and the atmosphere exterior of the fuselage.

If some of the turbo-jet powerplants **5** are in operation and an additional turbo-jet powerplant **5** is to be brought into operation, the swing check valve **5***b* at the downstream end of the turbo-jet exhaust nozzle **5***a* is maintained closed by the pressure from the already operating turbo-jet powerplants reacting on the downstream side of the swing check valve **5***b*. The powerplant **5** to be brought into operation can be started by the pilot activating the appropriate electric solenoid **38** to open the valved passage **36** in the turbo-jet exhaust nozzle **5***a* to allow communication between the powerplant and the annular connector ring **35** venting the turbo-jet discharge to substantially atmospheric pressure. As the powerplant being brought into operation by rammed air pressure or other appropriate means comes up to sufficient speed so that the swing check valve **5***b* can be opened by exhaust gas pressure, the discharge from the engine will pass through the annular connector ring **35** into exhaust passage **39** and through the unbalanced butterfly valve **40**, the discharge pressure through exhaust passage **39** forcing the valve **40** open, and thus venting the exhaust from the engine being started to the atmosphere. Without such a spill means, the swing check valve **5***b* would be held closed by the engines already in operation and there would be an excessive back pressure on the turbo-jet powerplant **5** that is being attempted to be started. Without the swing check valves **5***b*, there would be wasteful reverse flow and also possibility of damage occurring to the non-operating turbo-jet powerplants **5** when only a portion of them are in operation. With the turbo-jet starting spill gate means **34**, as soon as the engine being brought into operation attains a substantial speed, the valve **37** can be closed by reactivation of solenoid **38** so as to cause the discharge of the turbo-jet powerplant **5** being brought into operation to open the appropriate swing check valve **5***b*, and thus the exhaust from that engine will join or combine with the exhaust from the already operating turbo-jet powerplants **5** and add to the fluid flow in longitudinal duct **6**.

Referring now to Figure 13, there is diagrammatically shown a control system for controlling the fluid flow from longitudinal duct **6** to the forward and rearward elongated efflux nozzles **7** and **9**. For vertical ascent, movement of a control rod **41** towards the right will cause control lever arm **42** to lift the plugs **43***a*, **44***a*, **45***a* and **46***a* permitting a flow of fluid pressure from longitudinal duct **6** to flow into passages **43**, **44**, **45** and **46** through main control passage **47**, control passages **43** and **44** controlling the valves **8***c* in the right and left forward lateral passages **8***a* and **8***b*, while control passages **45** and **46** serve to actuate valves **10***a* in the aft or rearward lateral passages **10**. By opening valves **8***c* and **10***a*, fluid from longitudinal duct **6** is in free communication to forward and aft chambers, **8***a*, **8***b*, **10***b* and **10***c*, with the fluid passing through the forward and rearward elongated efflux nozzles **7** and **9**, which are located on the chines **13**, the gases causing a reactive force upward upon exhaust through the elongated efflux nozzles. Both the forward and rearward elongated efflux nozzles **7** and **9** may be controllable so as to give a true upward reaction or a forward or rearward directed reaction, the latter two resulting in a propulsive force or braking force respectively.

Although propulsive nozzle **3** is the same as used in my copending application Serial Number 677,877 filed August 13, 1957, in that it comprises three pairs of horizontal vanes mounted pivotally on horizontal axes with each set of three vanes being separately and individually tiltable for pitch, roll and bank, a high degree of control is able to be achieved by the appropriate use of elongated

351 || @HighEarthOrbit_ linktr.ee/Grider2

efflux nozzles 7 and 9. Maximum vertical lift can be achieved by drawing control rod 41 to the right which pulls control lever arm 42 to the right removing the plugs 43*a*, 44*a*, 45*a* and 46*a* from the control passages 43, 44, 45 and 46, permitting fluid pressure in longitudinal duct 6 to pass through main control passage 47, main control manifold 47*a* and control passages 43, 44, 45 and 46 to the pistons controlling lateral passage valves 8*c* and 10*a* for opening passages 8 and 10 allowing the propulsive fluids to flow into chambers 8*a*, 8*b*, 10*b* and 10*c* for discharge from elongated efflux nozzles 7 and 9. It is to be noted that efflux nozzles 7 and 9 contain controllable valves of any of the variety of embodiments shown in my copending application Serial Number 677,877 identified above.

For the differentiable control aspect, each of the pairs of control passage plugs are mounted on control lever arm 42 by a rocker arm 48, the forward control passage plugs 43*a* and 44*a* being mounted on one rocker arm 48 and the rearward control passage plugs 45*a* and 46*a* being mounted on a second rocker arm 48. Each of the control passage plugs has a solenoid means associated therewith for individual actuation of one control passage plug relative to the other one of its pair, or to allow control of a pair of control passage plugs relative to the other pair. For an example, assuming that a bank to the right is to be made by the aircraft, control rod 41 will be pulled toward the right slightly so as to attempt to uncover all of the control passages 43, 44, 45 and 46. Concurrently, solenoids 43*b* and 45*b* will be activated causing control passage plugs 43*a* and 45*a* to be further removed from control passages 43 and 45, while control passage plugs 44*a* and 46*a* are seated on control passages 44 and 46 preventing fluid flow from the main control manifold 47*a* entering the control passages 44 and 46. Therefore the elongated efflux nozzles 7*b* and 9*b* on the left side of the aircraft will be supplied with fluid pressure from longitudinal duct 6 for a reactive discharge therethrough causing the left side of the aircraft to rise relative to the right side of the aircraft causing a bank to the right.

Pitch control is accomplished in the same manner by pulling control rod 41 slightly to the right and activating a pair of the solenoids together; that is activation of solenoids 43*b* and 44*b* to point the nose of the aircraft up and actuation of solenoids 45*b* and 46*b* to point the nose of the aircraft down. During flight such control variations can be scheduled into the individual elements through an electronic flight control system or programmer.

In operation when the aircraft is ready to take off the individual turbo-jet powerplants 5 can be started, each being started individually and having its combustion products discharge through turbo-jet starting spill gate means 34 until it attains the speed of the already running powerplants. The ram air bypass passage 19 is closed by means of petal valve 20 while each of the swing check valves 5*b* on the exhaust nozzles 5*a* of the non-operative turbo-jet powerplants 5 are maintained closed. For vertical lift or vertical takeoff the control rod 41 is moved slightly to the right so as to uncover control passages 43, 44, 45 and 46 resulting in the elongated efflux nozzles 7 and 9 to be supplied with a fluid flow for discharge therethrough resulting in an upward reactive force. When sufficient altitude is reached the controllable valves in the elongated efflux nozzles can be adjusted so as to impart a rearward exhaust direction giving a forward translational velocity to the aircraft, and upon the gradual reduction of fluid pressure flow through the lateral passages the fluid in longitudinal duct 6 will then pass through the rear propulsive nozzle 3. During operation should a condition of ram air spill over the inlet lip 2*a* tend to occur, by ram air spill gate means 22 a pivoted valve member 23 is progressively opened allowing spill air to pass out therethrough in correct amount reducing the spill of ram air over the inlet lip 2*a* to an insignificant value.

In view of the fuselage shape having an inherent high *L/D* ratio at all flight speeds and attitudes, a most efficient use of propulsion is accomplished whether through the elongated efflux nozzles 7 and 9 or the propulsive nozzle 3, or a combination thereof. The elongated efflux through nozzles beneath the chines developes as a sheet which rapidly mixes with the ambient air, hence, the noise level will be comparatively low compared to large circular nozzle openings. It is also to be noted that the *L/D* ratio of the airplane will be benefited by the jet sheets beneath the chines by reducing spill along the flanks of the fuselage. As soon as the aircraft is at altitude and ready to cruise, the turbo-jet powerplants 5 can be shut down and cruising propulsion is attained by ram-jet power through the use of ram-jet burner means 11 at the end of longitudinal duct 6. By having the ram-jet burner means 11 at the aft end of longitudinal duct 6, the walls of the longitudinal duct 6 are not subject to the high heat of ram-jet combustion gases that would occur if the burner means 11 were at a point forward of its location.

Having described only a typical form of the invention I do not wish to be limited to the specific details herein set forth, but wish to reserve to myself any variations or modifications that may appear to those skilled in the art and fall within the scope of the following claims.

What is claimed is:

1. In an aircraft having a ram inlet and a spike therein, a ram air spill gate means comprising a valve controlled passage from the inlet interior to the atmosphere, a valve in said passage, pneumatic relay servo means controlling said valve, first pressure sensitive means responsive to substantially ambient pressure, and second pressure sensitive means responsive to pressure variations occurring due to ram air spill over the ram inlet lip, said pneumatic relay servo valve controlling means connected to the first and second pressure sensitive means whereby the valve is opened by a condition of ram air spill over the inlet lip indicated by a reduction of pressure level sensed by the second pressure sensitive means relative to the pressure level sensed by the first pressure sensitive means, said valve allowing passage of ram air from the inlet interior to the atmosphere directly thereupon reducing ram air spill over the inlet lip.

2. In an aircraft having a ram inlet and a spike therein, a ram air spill gate means comprising a valve controlled passage from the inlet interior to the atmosphere, a valve in said passage, pneumatic relay servo means controlling said valve, first pressure sensitive means in the forward portion of the inlet spike, and second pressure sensitive means on the outer surface of the inlet slightly downstream of the inlet lip, said pneumatic relay servo valve controlling means connected to the first and second pressure sensitive means whereby the valve is opened by a condition of ram air spill over the inlet lip indicated by a reduction of pressure level sensed by the second pressure sensitive means relative to the pressure level sensed by the first pressure sensitive means, said valve allowing passage of ram air from the inlet interior to the atmosphere directly thereupon reducing ram air spill over the inlet lip.

3. In an aircraft having a ram inlet, a plurality of turbo-jet powerplants located adjacent the downstream portion of the inlet, said powerplants arranged so as to provide an envelope for a ram air passage for ram-jet operation, and a valve means at the downstream end of each of the turbo-jet powerplants and the ram air passage whereby when the aircraft is on turbo-jet operation the ram air passage valve means is closed, and when the aircraft is on ram-jet operation all of the turbo-jet powerplant valve means are closed.

4. In an aircraft having a ram inlet, a plurality of

352 || @HighEarthOrbit_ linktr.ee/Grider2

turbo-jet powerplants located adjacent the downstream portion of the inlet, said powerplants arranged so as to provide an envelope for a ram air passage for ram-jet operation, a valve means at the downstream end of each of the turbo-jet powerplants and the ram air passage whereby when the aircraft is on turbo-jet operation the ram air passage valve means is closed and when the aircraft is on ram-jet operation all of the turbo-jet powerplant valve means are closed, and each of said valve means including a means for biasing said valve means to a closed position.

5. In an aircraft having a ram inlet, a plurality of turbo-jet powerplants located adjacent the downstream portion of the inlet, said powerplants arranged so as to provide an envelope for a ram air passage for ram-jet operation, and a valve means at the downstream end of each of the turbo-jet powerplants and the ram air passage whereby when the aircraft is on turbo-jet operation the ram air passage valve means is maintained closed by pressure generated by the turbo-jet powerplant reacting on the downstream side thereof and when the aircraft is on ram-jet operation all of the turbo-jet powerplant valve means are maintained closed by pressure generated by air passing through the ram air passage reacting on the downstream sides thereof.

6. In an aircraft having a ram inlet, a plurality of turbo-jet powerplants located adjacent the downstream portion of the inlet, said powerplants arranged so as to provide an envelope for a ram air passage for ram-jet operation, a first valve means at the downstream end of each of the turbo-jet powerplants, said first valve means of the substantially rectangular swing check type pivotally connected to one side of the downstream end of each turbo-jet powerplant, and a second valve means at the downstream end of the ram air passage, said first and second valve means adapted whereby when the aircraft is on turbo-jet operation the ram air passage valve means is closed and when the aircraft is on ram-jet operation all of the turbo-jet powerplant swing check valves are closed.

7. In an aircraft having a ram inlet, a plurality of turbo-jet powerplants located adjacent the downstream portion of the inlet, said powerplants arranged so as to provide an envelope for a ram air passage for ram-jet operation, a first valve means at the downstream end of each of the turbo-jet powerplants, and a second valve means of the iris type pivotally connected circumferentially around the ram air passage at the downstream end thereof, said first and second valve means adapted whereby when the aircraft is on turbo-jet operation the ram air passage iris valve is closed, and when the aircraft is on ram-jet operation all of the turbo-jet powerplant valve means are closed.

8. In an aircraft having a ram inlet with a plurality of turbo-jet powerplants located at the downstream portion of the inlet, a first valve means at the downstream end of each of the turbo-jet powerplants, and an engine starting spill gate means comprising a duct communicating each of the turbo-jet powerplants from a connection upstream of the downstream end first valve means to the atmosphere, and a second valve means at each connection of the duct to a turbo-jet powerplant whereby when less than all of the turbo-jet powerplants are operating and the first valve means on each shut down turbo-jet powerplant is closed, a shut down turbo-jet powerplant can be started by opening its second valve means to allow the starting exhaust from that powerplant to pass through the duct to the atmosphere for ease of starting without adverse effects of back pressure caused by already running turbo-jet powerplants.

9. In an aircraft having a ram inlet with a plurality of turbo-jet powerplants located in the downstream portion of the inlet, a first valve means at the downstream end of each of the turbo-jet powerplants, and an engine starting spill gate means comprising an annular manifold duct, said duct connected to each of the turbo-jet powerplants upstream of the downstream end first valve means, second valve means at each connection of the duct to a turbo-jet powerplant, and means venting the duct to the atmosphere, said engine starting spill gate means arranged whereby when less than all of the turbo-jet powerplants are operating and the first valve means on each shut down turbo-jet powerplant is closed, a shut down turbo-jet powerplant can be started by opening its second valve means to allow the starting exhaust from that powerplant to pass through the duct to the atmosphere for ease of starting without adverse effects of back pressure caused by already running turbo-jet powerplants.

10. A device as claimed in claim 7 wherein the first valve means is a substantially rectangular swing check valve pivotally connected to one side of the downstream end of each turbo-jet powerplant.

11. A device as claimed in claim 7 wherein the second valve means is a positive operated butterfly valve.

12. An aircraft fuselage having an inherent high L/D ratio at all flight speeds formed by a substantially conical surface of revolution at the forward end for a short length to a first fuselage point, the outer fuselage surface transforming to a first and second surface at the first fuselage point, the first surface extending from the first fuselage point to a second fuselage point mid-length of the fuselage as a semi-circular shape of increasing radius, the first surface extending aft from the second fuselage point with the semi-circular radius constant, and the second surface extending from the first fuselage point to the second fuselage point as a flat triangle bounded laterally by slightly conical surfaces of decreasing radii in a rearward direction, the second surface extending aft of the second fuselage point as a flat surface of constant width.

13. An aircraft fuselage having an inherent high L/D ratio at all flight speeds with a ram inlet at the forward end and a propulsive nozzle at the aft end formed by a substantially conical surface of revolution at the forward end for a short length to a first fuselage point, the outer fuselage surface transforming to a first and second surface at the first fuselage point, the first surface extending from the first fuselage point to a second fuselage point mid-length of the fuselage as a semi-circular shape of increasing radius, the first surface extending aft to the propulsive nozzle from the second fuselage point with the semi-circular radius constant, the second surface extending from the first fuselage point to the second fuselage point as a flat triangle bounded laterally by slightly conical surfaces of decreasing radii in a rearward direction, the second surface extending aft to the propulsive nozzle from the second fuselage point as a flat surface of constant width.

14. An aircraft fuselage having an inherent high L/D ratio at all flight speeds formed by a substantially conical surface of revolution at the forward end for a short length to a first fuselage point, the outer fuselage surface transforming to a first and second surface at the first fuselage point, the first surface extending from the first fuselage point to a second fuselage point mid-length of the fuselage as a semi-circular shape of increasing radius, the first surface extending aft from the second fuselage point with the semi-circular radius constant, the second surface extending from the first fuselage point to the second fuselage point as a flat triangle bounded laterally by slightly conical surfaces of decreasing radii in a rearward direction, the second surface extending aft of the second fuselage point as a flat surface of constant width, a chine on both sides of the fuselage formed by the intersection of the first and second surfaces and extending from the first fuselage point to the aft end of the fuselage, and downward facing and laterally extending vertical lift efflux nozzle openings located beneath the chines whereby a smooth external aircraft surface contour is maintained.

15. In an aircraft the combination of a fuselage having an inherent high L/D ratio at all flight speeds, a ram

353 || @HighEarthOrbit_ linktr.ee/Grider2

inlet at the forward end of said fuselage, the fuselage formed by a substantially conical surface of revolution extending aft from the inlet lip for a short length to a first fuselage point, the outer fuselage surface transforming to a first and second surface at the first fuselage point, the first surface extending from the first fuselage point to a second fuselage point mid-length of the fuselage as a semi-circular shape of increasing radius, the first surface extending aft from the second fuselage point with the semi-circular radius constant, the second surface extending from the first fuselage point to the second fuselage point as a flat triangle bounded laterally by slightly conical surfaces of decreasing radii in a rearward direction, the second surface extending aft of the second fuselage point as a flat surface of constant width, a ram air spill gate means comprising a valve controlled passage from the inlet interior to the atmosphere on the second fuselage surface, a valve in said passage, and means controlling said valve, said valve controlling means being responsive to conditions of ram air spill over the lip of said inlet whereby said valve is opened for passage of ram air to the atmosphere to reduce the spill of ram air over the inlet lip.

16. In an aircraft the combination of a fuselage having an inherent high L/D ratio at all flight speeds, a ram inlet at the forward end of said fuselage, the fuselage formed by a substantially conical surface of revolution extending aft from the inlet lip for a short length to a first fuselage point, the outer fuselage surface transforming to a first and second surface at the first fuselage point, the first surface extending from the first fuselage point to a second fuselage point mid-length of the fuselage as a semi-circular shape of increasing radius, the first surface extending aft from the second fuselage point with the semi-circular radius constant, the second surface extending from the first fuselage point to the second fuselage point as a flat triangle bounded laterally by slightly conical surfaces of decreasing radii in a rearward direction, the second surface extending aft of the second fuselage point as a flat surface of constant width, a plurality of turbojet powerplants located adjacent the downstream portion of the inlet, said powerplants arranged so as to provide an envelope for a ram air passage for ram-jet operation, and the valve means at the downstream end of each of the turbo-jet powerplants and the ram air passage whereby when the aircraft is on turbo-jet operation the ram air passage valve means is closed, and when the aircraft is on ram-jet operation all of the turbo-jet powerplant valve means are closed.

17. In air aircraft the combination of a fuselage having an inherent high L/D ratio at all flight speeds, a ram inlet at the forward end of said fuselage, the fuselage formed by a substantially conical surface of revolution extending aft from the inlet lip for a short length to a first fuselage point, the outer fuselage surface transforming to a first and second surface at the first fuselage point, the first surface extending from the first fuselage point to a second fuselage point mid-length of the fuselage as a semi-circular shape of increasing radius, the first surface extending aft from the second fuselage point with the semi-circular radius constant, the second surface extending from the first fuselage point to the second fuselage point as a flat triangle bounded laterally by slightly conical surfaces of decreasing radii in a rearward direction, the second surface extending aft of the second fuselage point as a flat surface of constant width, a plurality of turbo-jet powerplants located at the downstream portion of the inlet, a first valve means at the downstream end of each of the turbo-jet powerplants, and an engine starting spill gate means comprising a duct communicating each of the turbo-jet powerplants from a connection upstream of the downstream end first valve means to the atmosphere on the second fuselage surface, and a second valve means at each connection of the duct to a turbo-jet powerplant whereby when less than all of the turbo-jet powerplants are operating and the first valve means on each shut down turbo-jet powerplant is closed, a shut down turbo-jet powerplant can be started by opening its second valve means to allow the starting exhaust from that powerplant to pass through the duct to the atmosphere for ease of starting without adverse effects of back-pressure caused by already running turbo-jet powerplants.

18. In an aircraft having a ram inlet, a plurality of turbo-jet powerplants located adjacent the downstream portion of the inlet, said powerplants arranged so as to provide an envelope for a ram air passage for ram-jet operation, and a valve means at the downstream end of each of the turbo-jet powerplants and the ram air passage whereby when the aircraft is on turbo-jet operation the ram air passage valve means is closed, and when the aircraft is on ram-jet operation all of the turbo-jet powerplant valve means are closed, a ram air spill gate means comprising a valve controlled passage from the ram inlet interior to the atmosphere, a valve in said passage, and means controlling said valve, said valve controlling means being responsive to conditions of ram air spill over the lip of said inlet whether the aircraft is on turbo-jet or ram-jet operation whereby said valve is opened for passage of ram air to the atmosphere to reduce the spill of ram air over the inlet lip.

19. In an aircraft having a ram inlet, a plurality of turbo-jet powerplants located at the downstream portion of the inlet, a first valve means at the downstream end of each of the turbo-jet powerplants, an engine starting spill gate means comprising a duct communicating each of the turbo-jet powerplants from a connection upstream of the downstream end first valve means to the atmosphere, a second valve means at each connection of the duct to a turbo-jet powerplant whereby when less than all of the turbo-jet powerplants are operating and the first valve means on each shut down turbo-jet powerplant is closed, a shut down turbo-jet powerplant can be started by opening its second valve means to allow the starting exhaust from that powerplant to pass through the duct to the atmosphere for ease of starting without adverse effects of back-pressure caused by already running turbo-jet powerplants, a ram air spill gate means comprising a valve controlled passage from the inlet interior to the atmosphere, a valve in said passage, and means controlling said valve, said valve controlling means being responsive to conditions of ram air spill over the lip of said inlet whereby said valve is opened for passage of ram air to the atmosphere to reduce the spill of ram air over the inlet lip.

20. In an aircraft having a ram inlet, a plurality of turbo-jet powerplants located adjacent the downstream portion of the inlet, said powerplants arranged so as to provide an envelope for a ram air passage for ram-jet operation, a first valve means at the downstream end of each of the turbo-jet powerplants and the ram air passage whereby when the aircraft is on turbo-jet operation the ram air passage valve means is closed and when the aircraft is on ram-jet operation all of the turbo-jet powerplant valve means are closed, an engine starting spill gate means comprising a duct communicating each of the turbo-jet powerplants from a connection upstream of the downstream end first valve means to the atmosphere, and a second valve means at each connection of the duct to a turbo-jet powerplant whereby when less than all of the turbo-jet powerplants are operating and the first valve means on each turbo-jet powerplant is closed, a shut down turbo-jet powerplant can be started by opening its second valve means to allow the starting exhaust from that powerplant to pass through the duct to the atmosphere for ease of starting without adverse effects of back pressure caused by already running turbo-jet powerplants.

21. In an aircraft the combination of a fuselage having an inherent high L/D ratio at all flight speeds, a ram inlet at the forward end of said fuselage, the fuselage formed by a substantially conical surface of revolution

354 || @HighEarthOrbit_ linktr.ee/Grider2

extending aft from the inlet lip for a short length to a first fuselage point, the outer fuselage surface transforming to a first and second surface at the first fuselage point, the first surface extending from the first fuselage point to a second fuselage point mid-length of the fuselage as a semi-circular shape of increasing radius, the first surface extending aft from the second fuselage point with the semi-circular radius constant, the second surface extending from the first fuselage point to the second fuselage point as a flat triangle bounded laterally by slightly conical surfaces of decreasing radii in a rearward direction, the second surface extending aft of the second fuselage point as a flat surface of constant width, a plurality of turbo-jet powerplants located adjacent the downstream portion of the inlet, said powerplants arranged so as to provide an envelope for a ram air passage for ram-jet operation, valve means at the downstream end of each of the turbo-jet powerplants and the ram air passage whereby when the aircraft is on turbo-jet operation the ram air passage valve means is closed and when the aircraft is on ram-jet operation all of the turbo-jet powerplant valve means are closed, a ram air spill gate means comprising a valve controlled passage from the inlet interior to the atmosphere on the second fuselage surface, a valve in said passage, and means controlling said valve, said valve controlling means being responsive to conditions of ram air spill over the lip of said inlet whether the aircraft is on turbo-jet or ram-jet operation whereby said valve is opened for passage of ram air to the atmosphere to reduce the spill of ram air over the inlet lip.

22. In an aircraft the combination of a fuselage having an inherent high L/D ratio at all flight speeds, a ram inlet at the forward end of said fuselage, the fuselage formed by a substantially conical surface of revolution extending aft from the inlet lip for a short length to a first fuselage point, the outer fuselage surface transforming to a first and second surface at the first fuselage point, the first surface extending from the first fuselage point to a second fuselage point mid-length of the fuselage as a semi-circular shape of increasing radius, the first surface extending aft from the second fuselage point with the semi-circular radius constant, the second surface extending from the first fuselage point to the second fuselage point as a flat triangle bounded laterally by slightly conical surfaces of decreasing radii in a rearward direction, the second surface extending aft of the second fuselage point as a flat surface of constant width, a plurality of turbo-jet powerplants located at the downstream portion of the inlet, a first valve means at the downstream end of each of the turbo-jet powerplants, and an engine starting spill gate means comprising a duct communicating each of the turbo-jet powerplants from a connection upstream of the downstream end first valve means to the atmosphere on the second fuselage surface, a second valve means at each connection of the duct to a turbo-jet powerplant whereby when less than all of the turbo-jet powerplants are operating and the first valve means on each shut down turbo-jet powerplant is closed, a shut down turbo-jet powerplant can be started by opening its second valve means to allow the starting exhaust from that powerplant to pass through the duct to the atmosphere for ease of starting without adverse effects of back pressure caused by already running turbo-jet powerplants, a ram air spill gate means comprising a valve controlled passage from the inlet interior to the atmosphere on the second fuselage surface, a valve in said passage, and means controlling said valve, said valve controlling means being responsive to conditions of ram air spill over the lip of said inlet whereby said valve is opened for passage of ram air to the atmosphere to reduce the spill of ram air over the inlet lip.

23. In an aircraft, the combination of a fuselage having an inherent high L/D ratio at all flight speeds, a ram inlet at the forward end of said fuselage, the fuselage formed by a substantially conical surface of revolution extending aft from the inlet lip for a short length to a first fuselage point, the outer fuselage surface transforming to a first and second surface at the first fuselage point, the first surface extending from the first fuselage point to a second fuselage point mid-length of the fuselage as a semi-circular shape of increasing radius, the first surface extending aft from the second fuselage point with the semi-circular radius constant, the second surface extending aft of the second fuselage point as a flat surface of constant width, a plurality of turbo-jet powerplants located adjacent the downstream portion of the inlet, said powerplants arranged so as to provide an envelope for a ram air passage for ram-jet operation, a first valve means at the downstream end of each of the turbo-jet powerplants and the ram air passage whereby when the aircraft is on turbo-jet operation the ram air passage first valve means is closed, and when the aircraft is on ram-jet operation all of the turbo-jet powerplant first valve means are closed, an engine starting spill gate means comprising a duct communicating with each of the turbo-jet powerplants from a connection upstream of the downstream end first valve means to the atmosphere on the second fuselage surface, and a second valve means at each connection of the duct to a turbo-jet powerplant whereby when less than all the turbo-jet powerplants are operating and the first valve means on each shut down turbo-jet powerplant is closed, a shut down turbo-jet powerplant can be started by opening its second valve means to allow the starting exhaust from that powerplant to pass through the duct to the atmosphere for ease of starting without adverse effects of back pressure caused by already running turbo-jet powerplants.

24. In an aircraft having a ram inlet, a plurality of turbo-jet powerplants located adjacent the downstream portion of the inlet, said powerplants arranged so as to provide an envelope for a ram air passage for ram-jet operation, a first valve means at the downstream end of each of the turbo-jet powerplants and the ram air passage whereby when the aircraft is on turbo-jet operation the ram air passage first valve means is closed, and when the aircraft is on ram-jet operation all of the turbo-jet powerplant first valve means are closed, an engine starting spill gate means comprising a duct communicating each of the turbo-jet powerplants from a connection upstream of the downstream end first valve means to the atmosphere, a second valve means at each connection of the duct to a turbo-jet powerplant whereby when less than all of the turbo-jet powerplants are operating and the first valve means on each shut down turbo-jet powerplant is closed, a shut down turbo-jet powerplant can be started by opening its second valve means to allow the starting exhaust from that powerplant to pass through the duct to the atmosphere for ease of starting without adverse effects of back pressure caused by already running turbo-jet powerplants, a ram air spill gate means comprising a valve controlled passage from the inlet interior to the atmosphere, a valve in said passage, and means controlling said valve, said valve controlling means being responsive to conditions of ram air spill over the lip of said inlet whether the aircraft is on turbo-jet or ram-jet operation whereby said valve is opened for passage of ram air to the atmosphere to reduce the spill of ram air over the inlet lip.

25. In an aircraft the combination of a fuselage having an inherent high L/D ratio at all flight speeds, a ram inlet at the forward end of said fuselage, the fuselage formed by a substantially conical surface of revolution extending aft from the inlet lip for a short length to a first fuselage point, the outer fuselage surface transforming to a first and second surface at the first fuselage point, the first surface extending from the first fuselage point to a second fuselage point mid-length of the fuselage as a semi-circular shape of increasing radius, the first surface extending aft from the second fuselage point with

355 || @HighEarthOrbit_ linktr.ee/Grider2

the semi-circular radius constant, the second surface extending from the first fuselage point to the second fuselage point as a flat triangle bounded laterally by slightly conical surfaces of decreasing radii in a rearward direction, the second surface extending aft of the second fuselage point as a flat surface of constant width, a plurality of turbo-jet powerplants located adjacent the downstream portion of the inlet, said powerplants arranged so as to provide an envelope for a ram air passage for ram-jet operation, a first valve means at the downstream end of each of the turbo-jet powerplants and the ram air passage whereby when the aircraft is on turbo-jet operation the ram air passage first valve means is closed, and when the aircraft is on ram-jet operation all of the turbo-jet powerplant first valve means are closed, an engine starting spill gate means comprising a duct communicating each of the turbo-jet powerplants from a connection upstream of the downstream end first valve means to the atmosphere on the second fuselage surface, a second valve means at each connection of the duct to a turbo-jet powerplant whereby when less than all of the turbo-jet powerplants are operating and the first valve means on on each shut down turbo-jet powerplant is closed, a shut down turbo-jet powerplant can be started by opening its second valve means to allow the starting exhaust from that powerplant to pass through the duct to the atmosphere for ease of starting without adverse effects of back pressure caused by already running turbo-jet powerplants, a ram air spill gate means comprising a valve controlled passage from the inlet interior to the atmosphere on the second fuselage surface, a valve in said passage, and means controlling said valve, said valve controlling means being responsive to conditions of ram air spill over the lip of said inlet whether the aircraft is on turbo-jet or ram-jet operation whereby said valve is opened for passage of ram air to the atmosphere to reduce the spill of ram air over the inlet lip.

References Cited in the file of this patent

UNITED STATES PATENTS

1,328,040	Finley	Jan. 13, 1920
1,684,240	Pigeon	Sept. 11, 1928
2,577,919	Roy	Dec. 11, 1951
2,699,906	Lee	Jan. 18, 1955
2,811,828	McLafferty	Nov. 5, 1957
2,832,192	Budish	Apr. 29, 1958
2,865,580	Marshall	Dec. 23, 1958

356 || @HighEarthOrbit_ linktr.ee/Grider2

United States Patent

Jaeger

[15] **3,640,489**

[45] **Feb. 8, 1972**

[54] **VERTICAL TAKEOFF AND LANDING AIRCRAFT**

[72] Inventor: **Karl Jaeger,** Im Stillen Winkel 21, 43 Essen-Margarethenhohe, Germany

[22] Filed: **July 28, 1969**

[21] Appl. No.: **845,242**

[30] **Foreign Application Priority Data**

July 26, 1968 Germany .....P 17 56 879.5

[52] **U.S. Cl.** .....**244/23 C**

[51] **Int. Cl.** **B64c 29/00**

[58] **Field of Search** 244/12, 23, 3.24; 239/265.35

[56] **References Cited**

UNITED STATES PATENTS

3,238,875	3/1966	Stadler et al.	244/3.24
3,390,899	7/1968	Herbert et al.	239/265.35
3,416,754	12/1968	Pinaire et al.	239/265.35
2,947,496	8/1960	Leggett	244/12
2,990,137	6/1961	Willis	244/12
3,082,977	3/1963	Arlin	244/12
3,162,011	12/1964	Mullins et al.	244/23
3,465,989	9/1969	Bowshier	244/23

Primary Examiner—Trygve M. Blix
Assistant Examiner—Steven W. Weinrich
Attorney—Karl F. Ross

[57] **ABSTRACT**

A vertical takeoff and landing (VTOL) aircraft has a discus-shaped fuselage with a plurality of angularly equispaced lift-generating assemblies. Each assembly comprises a rotor above or flush with the fuselage, a compressor in the fuselage drawing air in from above, and a nozzle below the fuselage for expelling the air from the compressor in a jet. The nozzles can be rotated to point in any direction. Thus, according to the settings of the nozzles, the aircraft can rise or sink vertically and move in any horizontal direction.

7 Claims, 4 Drawing Figures

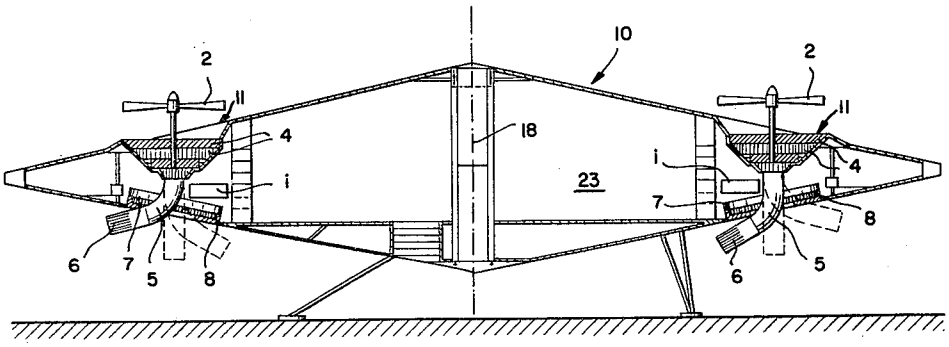

357 || @HighEarthOrbit_ linktr.ee/Grider2

FIG. 4

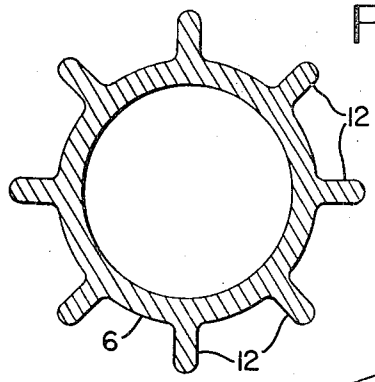

FIG. 1

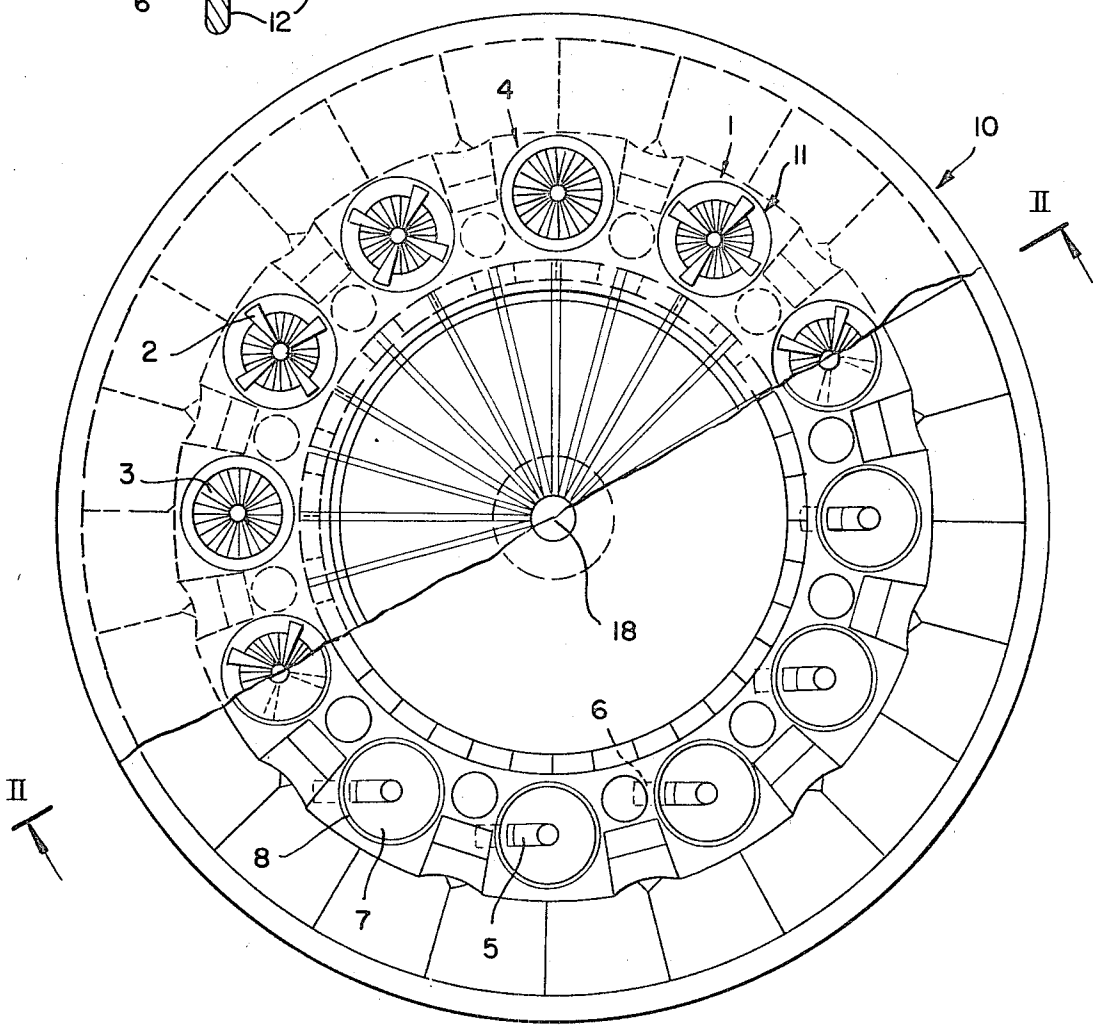

INVENTOR.
KARL JAEGER
BY
Karl F. Ross
ATTORNEY

358 || @HighEarthOrbit_ linktr.ee/Grider2

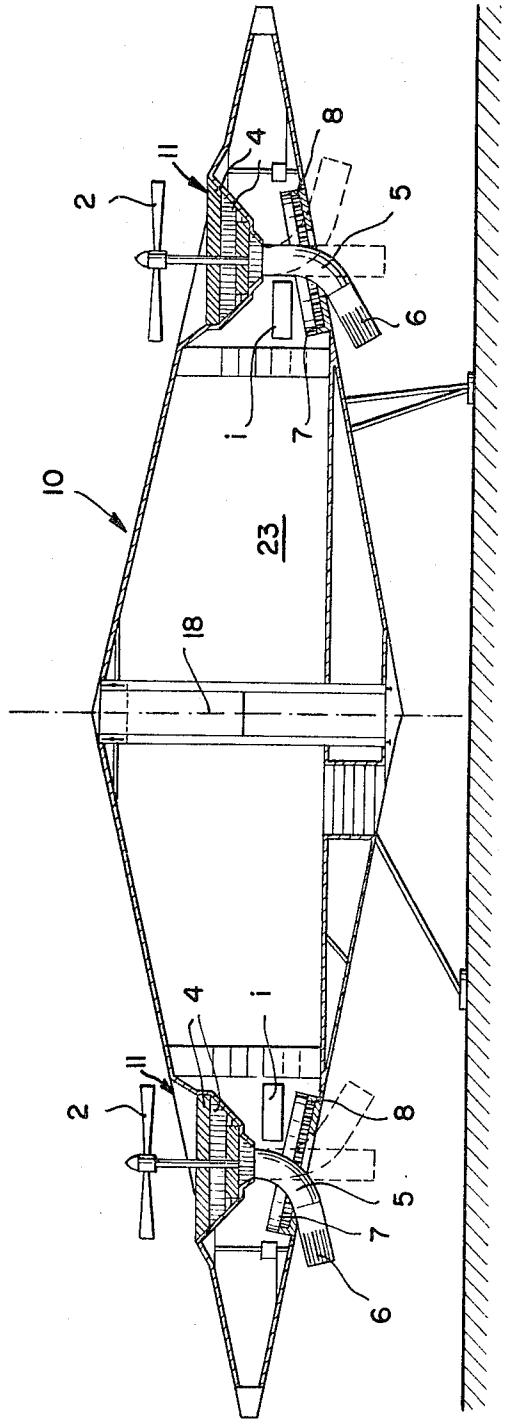

FIG. 2

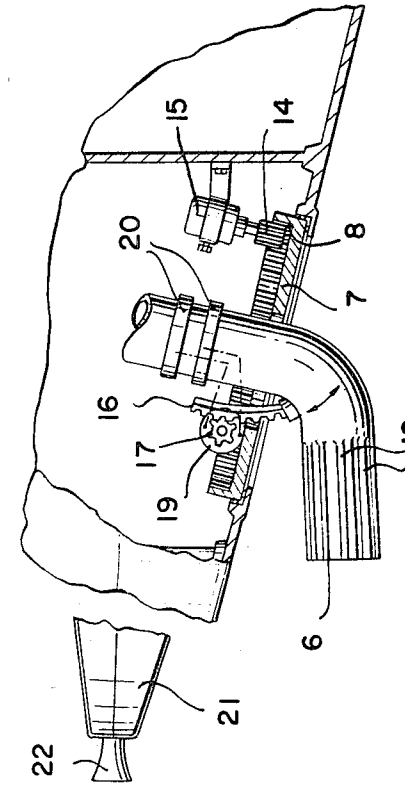

FIG. 3

INVENTOR.
KARL JAEGER
BY
Karl F. Ross
ATTORNEY

359 || @HighEarthOrbit_ linktr.ee/Grider2

VERTICAL TAKEOFF AND LANDING AIRCRAFT

FIELD OF THE INVENTION

The present invention relates to an aircraft and, more particularly, to an aircraft of the vertical takeoff and landing (V-TOL) type.

BACKGROUND OF THE INVENTION

There are two general types of aircraft: those which use air currents passing over relatively fixed airfoils for lift, and those using substantially horizontal fans or screws to mount in the air. Both types offer particular advantages and disadvantages. The conventional airplane is relatively inexpensive and can attain great speeds with large payloads; however, it requires extensive takeoff and landing facilities and is adversely affected by many wind conditions. Those aircraft of the helicopter type can take off and land vertically on any more or less flat and solid surface; but they are very expensive, can only attain relatively low cruising speeds, and cannot carry large payloads.

Solutions to the above-mentioned difficulties have been attempted in the form of hybrid aircraft supposedly combining the advantages of the two types while obviating their disadvantages. One such essay is an aircraft equipped with horizontally oriented screw propellers that are used only on takeoff and landing and are folded back during normal flight wherein conventional wings and vertically oriented fans are used. Sometimes the entire wing-and-propeller assembly is rotatable through 90° to make this possible. Such an aircraft has certain advantages, yet it still uses the principle of lift generated by airflow over an airfoil for conventional flight and has, therefore, several disadvantages. Namely, such a vehicle must attain a certain horizontal velocity before it can be converted from one mode to the other, a speed often very difficult to obtain with the means at hand. Furthermore such aircraft are complicated and expensive in the extreme and, thus, troublesome and often dangerous.

OBJECTS OF THE INVENTION

It is, therefore, the general object of the present invention to provide an improved aircraft.

A more specific object is to provide an aircraft of the VTOL type which overcomes the disadvantages of the above-described aircraft.

SUMMARY OF THE INVENTION

The above objects are attained, in accordance with some of the features of the present invention, by an aircraft having a discus-shaped fuselage mounting a plurality of circumferentially spaced lift-generating assemblies and thereby being a sort of flying saucer. Each assembly comprises a rotor above or flush with the fuselage and oriented in a generally horizontal plane, means for rotationally driving the rotor, preferably in the form of a radial-piston engine, and a compressor below each rotor sucking air in from above and expelling it below through a nozzle. Control means is provided to turn the nozzles individually or jointly in any substantially horizontal direction and to turn them through substantially 90° so that they can point straight down, or off to any side.

Such an aircraft can take off or land vertically, the lift being generated substantially by the rotors and by the air being expelled in high-pressure jets from the bottom of the aircraft. Once airborne, the craft can be displaced horizontally by pointing the nozzles back, in the direction of travel. Simple alteration of motor speed and orientation of the nozzles thus controls the craft fully. The rotors above the fuselage virtually eliminate drag during takeoff, and permit such takeoff regardless of wind direction.

According to an important feature of this invention, the fuselage is defined between an upper and a lower conical surface (of the upper and lower halves of the airframe) centered on the vertical axis of the aircraft so that the fuselage tapers radially outward, the structure having its center of gravity located along the vertical axis and preferably at the lower third of the latter so that disturbances of the aircraft in flight, e.g., as a result of air turbulence will immediately result in a compensating movement of the aircraft to restore its horizontal position with the center of gravity located in the same vertical line with the top of the aircraft. It is important also to note that the lift-generating means act along the upper surface of the fuselage and thereby provides a lever type of action to restore aircraft stability.

An important aspect of this invention resides in the provision, in addition to airscrews (propellers), lift-generating fans with air increase formed by openings in the upper conical surface of the fuselage while the nozzles discharge high-velocity jets of air along the lower conical surface. The advantages of an arrangement of this type are that it may make use in a novel manner, of principles which have already been recognized in fixed-wing aircraft. Thus it is known to reduce the viscous drag or air resistance along the leading edge and upper skin of a fixed airfoil by providing openings in the latter through which the boundary layer is drawn and discharged below the airfoil or at its trailing edge, thereby eliminating the turbulence along the airfoil surfaces and increasing both propulsion and lift efficiency. In accordance with this principle, the fans draw air from along the upper surface and feed the air to the nozzles directly or through a compressor which may be driven on the same shafts as the fans, turbulence along the upper surface of the fuselage is minimized and air resistance reduced. The fans, moreover, may alternate with individual airscrew arrangements and/or pairs or triplets of such airscrews and may be driven by any convenient prime movement. The airscrews or propellers are advantageously spaced above the surface so that immediately below that there may be provided the open mouth or inlets of the compressors which are coupled with the propellers.

I have found, most surprisingly, that high stability can be assured and simple steering or rudder control accomplished by providing the discharge nozzles as flexible ducts whose upper portions extend axially and thus are aligned with the shafts of the respective compressors, propellers and fans, while the lower portion of each duct is bent in a form of an elbow to provide a discharge and extending generally radially with respect to the axis of the upper portion of the duct. The elbow is lodged in a control disk which is generally planar and lies along the upwardly and outwardly inclined frustoconical underside of the fuselage so as to be rotatable about an axis intersecting the axis of the respective propeller, fan, or compressor and extending perpendicular to the underside of the fuselage. An especially important characteristic of this invention is that the depending portion of the elbow, which extends more or less radially as noted above, is formed with longitudinally extending fins performing a rudder function.

DESCRIPTION OF THE DRAWING

The above and other objects, features, and advantages will become more fully apparent in the following description, reference being made to the accompanying drawing, in which:

FIG. 1 is a diagrammatic top view partly broken away and partly in section of an aircraft according to the present invention;

FIG. 2 is a section along the line II—II of FIG. 1; and

FIG. 3 is a vertical section showing details of FIG. 1 in enlarged scale;

FIG. 4 is a cross section view of the aircraft's rotatable nozzles disclosing the stabilizing fins in enlarged scale.

SPECIFIC DESCRIPTION

As shown in FIGS. 1–3 the aircraft has a fuselage **10** shaped like a discus with upper and lower conical faces, thereby making the craft into a sort of flying saucer. Spaced around this fuselage **10**, equidistant from a center axis **18** and angularly equidistant from one another are a plurality, here **12**, of lift-

360 || @HighEarthOrbit_ linktr.ee/Grider2

generating assemblies **11**. Each assembly has a rotor in the form of an airscrew propeller **2** or a lift fan **3**, the distribution depending on the size and weight of the craft. The airscrews **2** are substantially above the fuselage **10**, while the fans **3** are virtually flush therewith.

Below each rotor, mounted in the fuselage **10**, is a compressor **4** which draws air in from below the rotor and expels it through a flexible tube **5**. This compressor **4** is mounted on the same shaft with the rotor which is itself driven by a radial-piston engine **1**.

FIG. **3** shows more details of the craft. Mounted on the end of the tube **5** is a nozzle **6** provided with longitudinal laterally projecting fins **12** acting as rudders or stabilizers. The tube **5** is fitted through a disk **7** formed with an internal gear **8** which meshes with a pinion **14** on an electric motor **15**. This arrangement, with motor **15**, allows the nozzles **6** to be pointed in any horizontal direction. The nozzle **6** further mounts an arcuate rack **16** which meshes with a pinion **17** of a motor **19** connected through sliprings **20** to a source of power. This motor **19** adjusts the inclination to the vertical of the nozzle, thereby allowing it to point straight down or, as shown in FIG. **2**, to the side.

The fuselage has an extreme edge **21**, as shown in FIG. **3**, which may carry a ramjet **22** used during flight for extra speed.

In order to take off, the nozzles **6** are either pointed straight downward, or directed somewhat inwardly toward one another. Once the vehicle is airborne, the nozzles **6** are directed to a side, all in the same direction, to displace the craft in the opposite direction. The jets **22** along one portion of the edge **21** assist the flight in the horizontal.

The center of gravity of the loaded craft is advantageously held in the lower third of a center region **23**. In this manner, the lift caused by the assemblies **11** is distributed all around the load and mostly above it, thereby giving the craft great stability. Indeed, the craft's normal center of gravity is exactly in the center, due mainly to the symmetrical construction, so that this stability is built in. Furthermore, change in speed of any of the motors **1** can be effected to raise or lower an edge of the craft, if desired.

I claim:

1. An aircraft comprising:

a closed-skin discus-shaped fuselage of circular outline having conical upper and lower halves centered on an axis and defining all of the airfoil surface of the aircraft within said outline, the center of gravity of the aircraft being located along said axis in said lower half;

a plurality of lift-generating assemblies spaced around said fuselage, each of said assemblies including a respective rotor rotatable along the top of said fuselage, means for rotationally driving said rotor, a respective compressor in said fuselage below said rotor drawing in and compressing air from below said rotor, and a respective nozzle connected to said compressor to expel from below said fuselage the air compressed thereby, said nozzles projecting downwardly below said fuselage and exclusively forming rudder controls for said aircraft; and

control means for selectively directionally orienting each of said nozzles, each of said control means including a rotatable disk mounted on and substantially flush with the lower surface of said fuselage, said nozzle being formed at the lower end of a fixed-elbow tube rising through the disk to the compressor, and drive means connected to said disk for rotating same and thereby rotating said nozzle.

2. The aircraft defined in claim **1** wherein each of said control means further includes means for orienting the respective tube and nozzle in a vertical plane.

3. The aircraft defined in claim **1** wherein said rotor is an airscrew spaced above said fuselage.

4. The aircraft defined in claim **1** wherein said rotor is a fan substantially flush with the upper surface of the fuselage.

5. The aircraft defined in claim **1** wherein said nozzles are formed with longitudinal fins below said fuselage.

6. The aircraft defined in claim **1** further comprising a shaft, said rotor and said compressor being mounted on said common shaft and said means for rotationally driving said rotor thereby also driving said compressor.

7. The aircraft defined in claim **1** wherein said assemblies are angularly equispaced around said fuselage.

* * * * *

361 || @HighEarthOrbit_ linktr.ee/Grider2

May 15, 1962 C. P. LENT 3,034,747

AIRCRAFT WITH DISCOID SUSTAINING AIRFOIL

Filed Jan. 8, 1957 5 Sheets-Sheet 1

FIG. 1

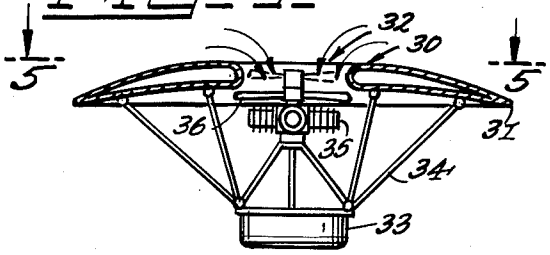

FIG. 5

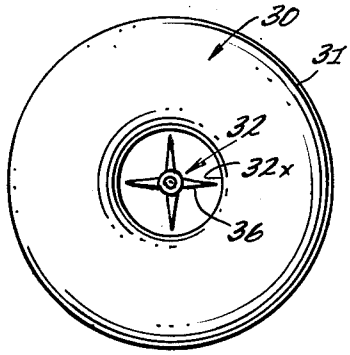

FIG. 2

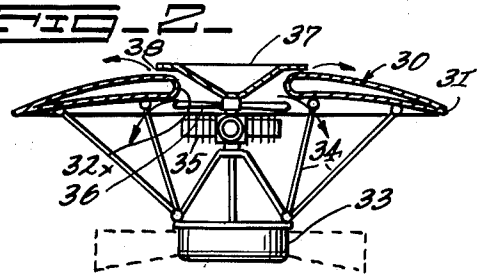

FIG. 3

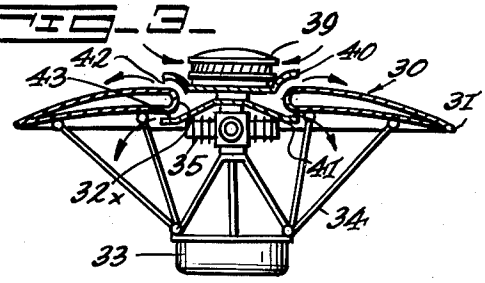

FIG. 6

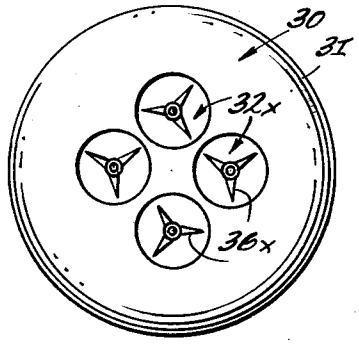

FIG. 4

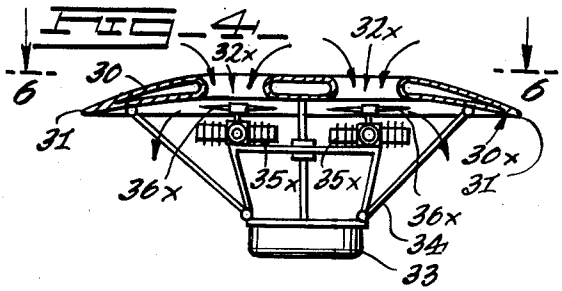

INVENTOR.
Constantin P. Lent

362 || @HighEarthOrbit_ linktr.ee/Grider2

May 15, 1962 C. P. LENT 3,034,747

AIRCRAFT WITH DISCOID SUSTAINING AIRFOIL

Filed Jan. 8, 1957 5 Sheets-Sheet 2

FIG. 7

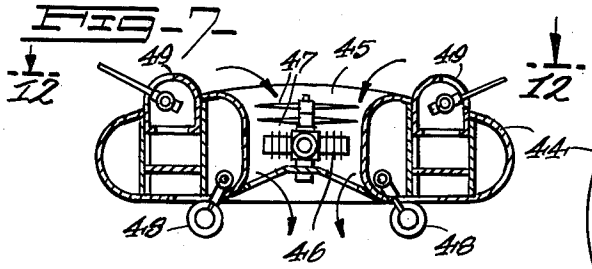

FIG. 12

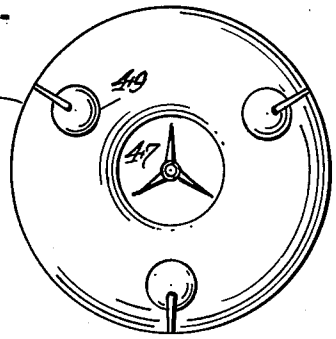

FIG. 8

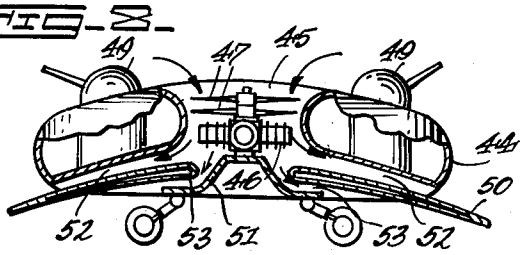

FIG. 13

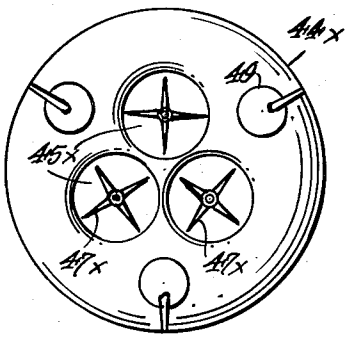

FIG. 9

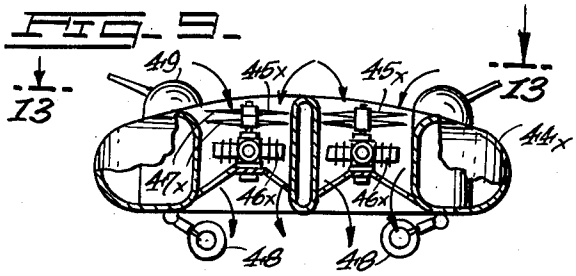

FIG. 10

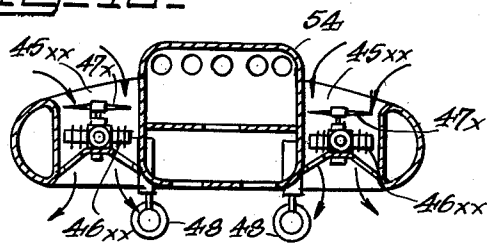

FIG. 14

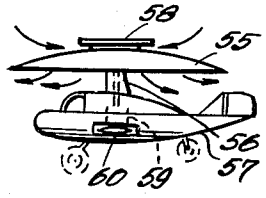

FIG. 11

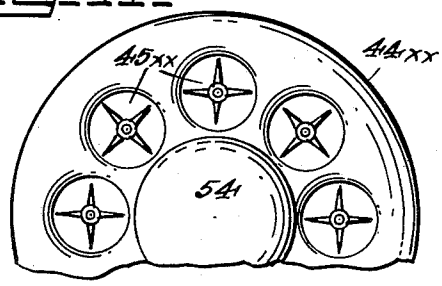

INVENTOR.
Constantin P Lent

363 || @HighEarthOrbit_ linktr.ee/Grider2

May 15, 1962 C. P. LENT 3,034,747

AIRCRAFT WITH DISCOID SUSTAINING AIRFOIL

Filed Jan. 8, 1957 5 Sheets-Sheet 3

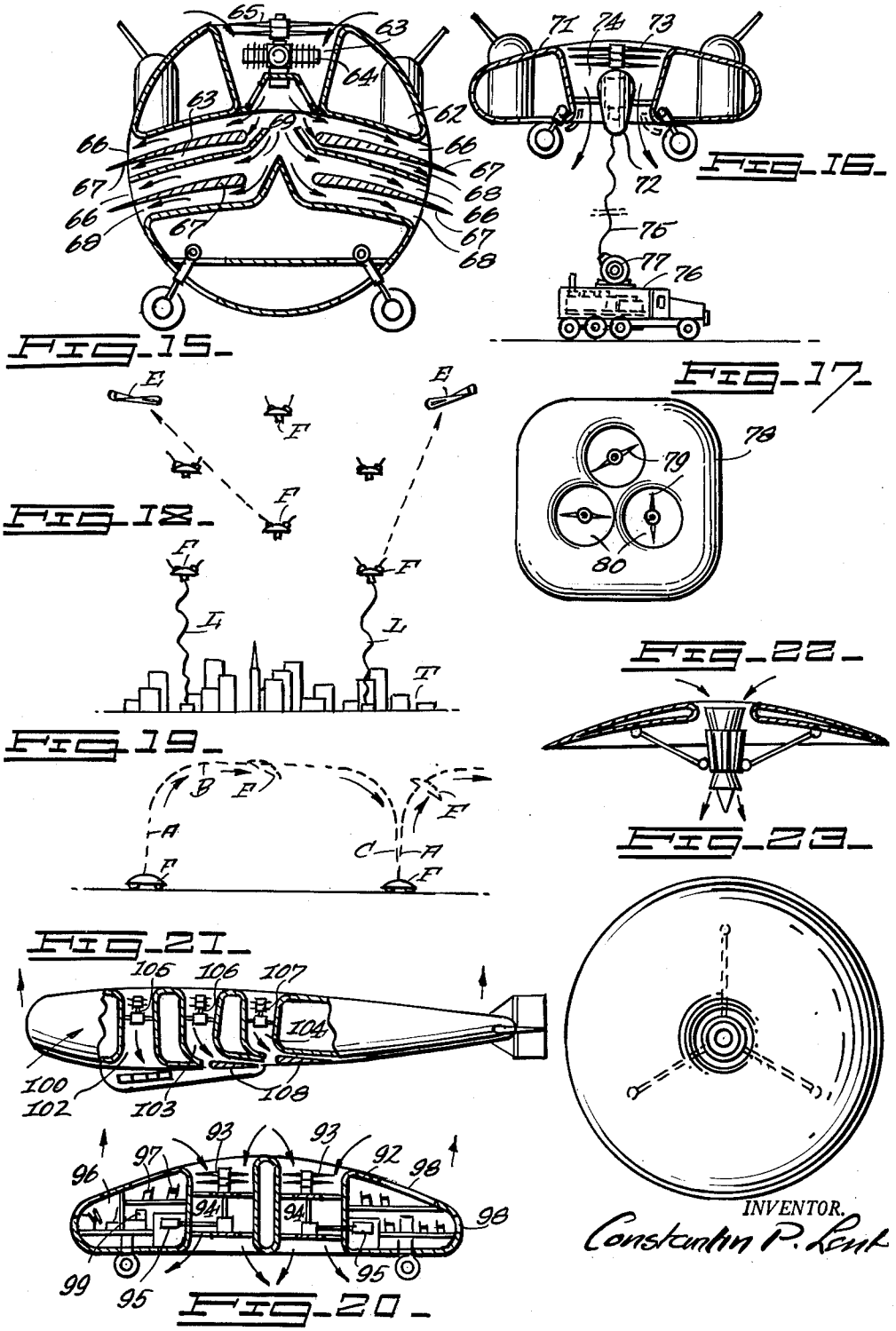

INVENTOR.
Constantin P. Lent

364 || @HighEarthOrbit_ linktr.ee/Grider2

May 15, 1962 C. P. LENT 3,034,747

AIRCRAFT WITH DISCOID SUSTAINING AIRFOIL

Filed Jan. 8, 1957 5 Sheets-Sheet 4

FIG. 24

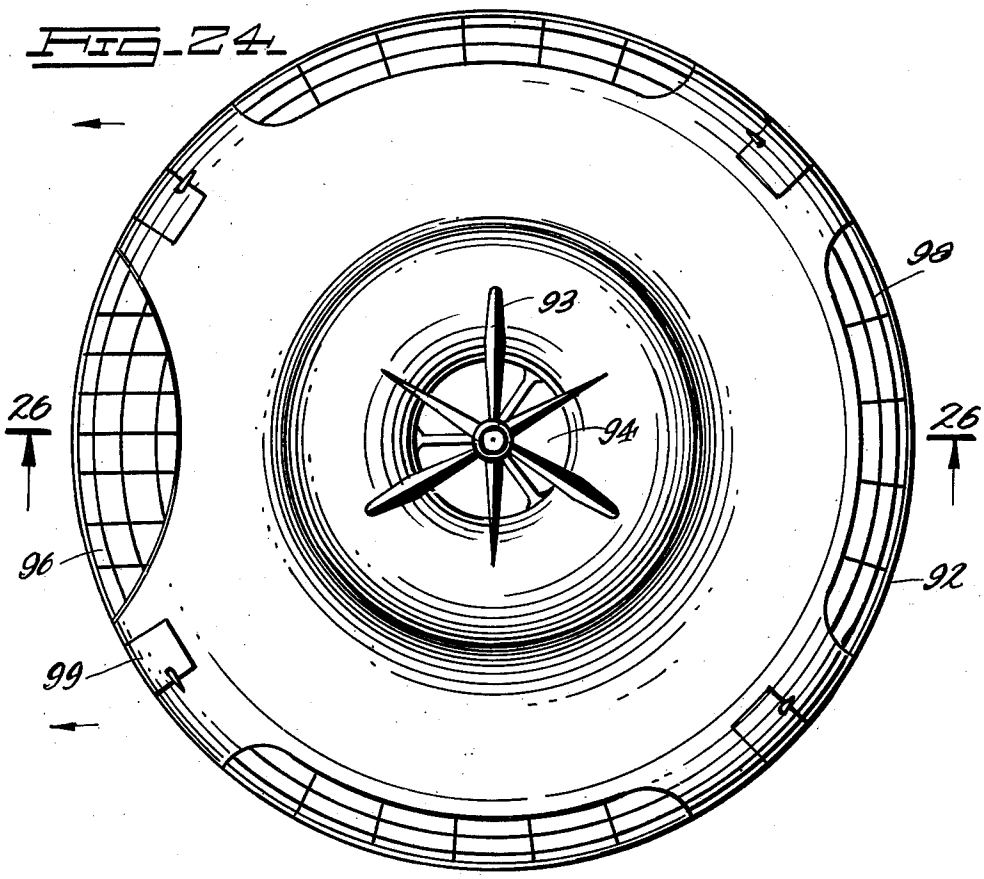

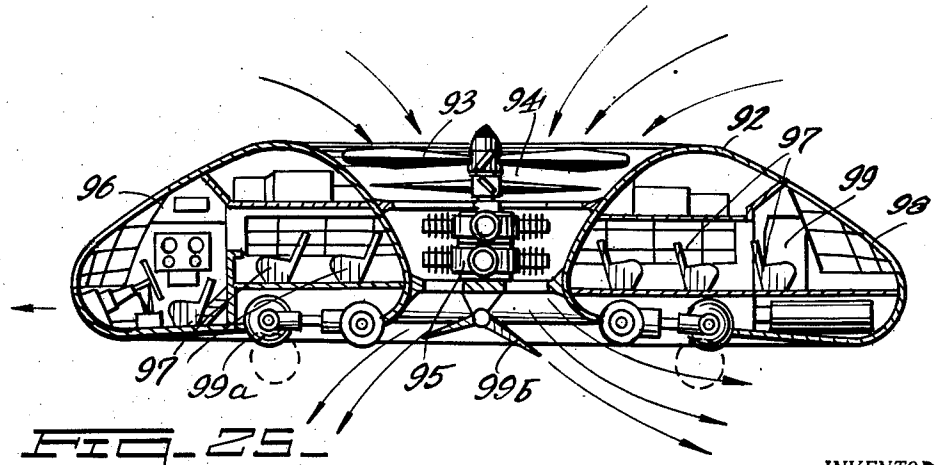

FIG. 25

INVENTOR
Constantin P Lent

365 || @HighEarthOrbit_ linktr.ee/Grider2

May 15, 1962 C. P. LENT 3,034,747

AIRCRAFT WITH DISCOID SUSTAINING AIRFOIL

Filed Jan. 8, 1957 5 Sheets-Sheet 5

FIG. 26.

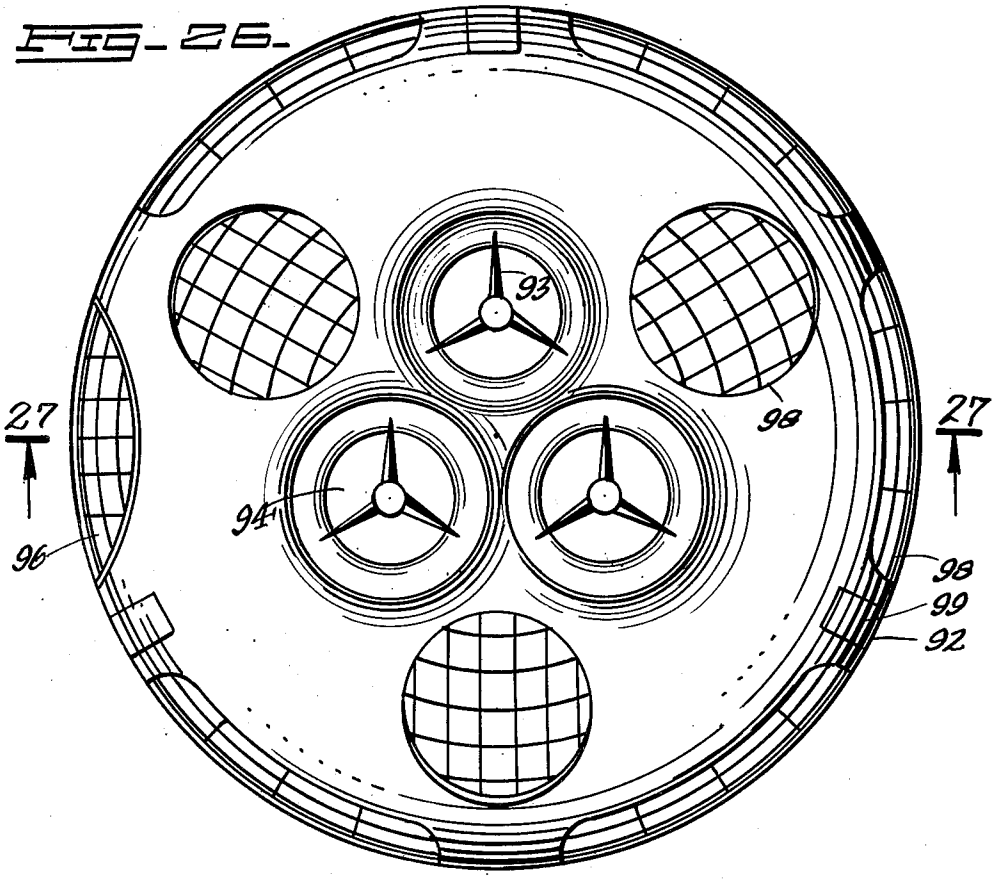

FIG. 27.

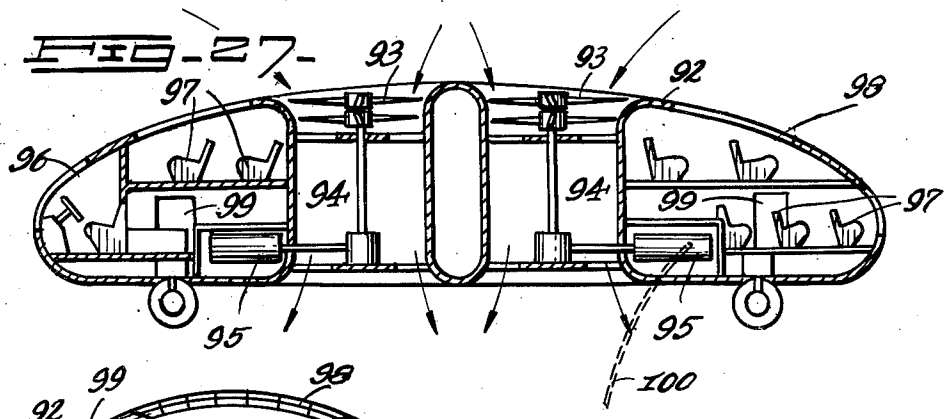

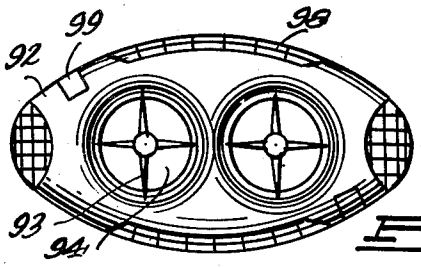

FIG. 28.

INVENTOR.
Constantin P. Lent
BY

366 || @HighEarthOrbit_ linktr.ee/Grider2

United States Patent Office

3,034,747

Patented May 15, 1962

1

3,034,747

AIRCRAFT WITH DISCOID SUSTAINING AIRFOIL

Constantin P. Lent, 50 E. 42nd St., New York, N.Y.

Filed Jan. 8, 1957, Ser. No. 644,427
4 Claims. (Cl. 244—23)

This invention relates to saucer-shaped aircraft and more particularly to vehicles having a round or circular body contour known as flying saucers.

The flying saucer described in this invention is not a thing in the realm of phantasy but a very practical aircraft obeying approved aerodynamic principles. Its mode of operation permits it to remain indefinitely in the air and as long as its prime-mover is supplied with fuel. It can hover over the ground at any height from 5 to 50,000 feet and more. It can move transversely under the control of a navigator and crew. It can carry passengers.

The saucer-shaped aircraft described in this invention can find utilization in commercial transportation such as air travel, trans-continental and trans-oceanic passenger service, commuter transport, mail transport and delivery and bus service for cities and towns. it is extremely useful for private plane operation.

The flying saucer described in this invention can attain tremendous speeds and its maneuverability is enormous. It can rise vertically instantaneously and travel at supersonic speeds. But it can also fly at extremely low speeds and if necessary it can land and take-off vertically at a passenger elevator speed or even less.

The flying saucer is safe and easy to operate. In case of motor failure, it will safely land by means of its circular wing the latter serving as a landing parachute.

Heretofore, heavier than air craft such as airplanes and helicopters relied upon the aerodynamic action of straight or slanted wings to produce the desirable lift. In the helicopter the aerodynamic action of the rotor blades being rotated through the air produce the lift.

In an airplane, the fuselage of the craft including its wings is propelled through the medium of the atmospheric air by means of the forward pull of propellers which are driven by reciprocating engines. In jet planes, forward pull is produced by the reaction of the gases in jet motors. In rocket driven planes, forward motion is produced by the reaction of the gases in its rocket motors. The well known aerodynamic action of the airfoil of the wing of the plane as it streams through the air creates a vacuum space above the wing and an air pressure space below it. The sum total of both, vacuum and air pressure, producing the vertical lift component which permits the wing respectively the fuselage of the plane to leave the ground. This is the principle that makes an airplane fly.

In a helicopter, the oversized rotor blades have an airfoil cross-section similar to the wing of the plane. As the blades of the rotor are rotated through the air by means of its motor, a vacuum space is created above the blades and an air pressure below; the sum total of both producing a vertical lift. This is the principle that makes a helicopter hover above ground.

In the flying saucer craft described in this invention, the fuselage of the round-shaped body of the vehicle or circular wing is provided at the center portion thereof with air inlets or openings to permit a flow of air. The airflow in question passes from above the fuselage of the craft, under it. The flow of air is created by means of propellers or rotors driven by a prime-mover.

The action of the air passing through the air inlet in the vehicle is twofold. First, the sucking action of the propeller or rotor lifts the craft aloft and second, the flow of air thus created is directed against the airfoil

2

cross-section of the circular wing to create a vacuum space over the wing and air pressure below it. The sum total of both, suction and aerodynamic action producing a lift.

Generally speaking this invention provides a circular structure which is equipped with one or a plurality of openings passing through said structure and being fitted with a motive means for creating an air stream and directing it from above said structure below it. The stream thus created creating a vacuum over the top surface of the circular structure and air pressure under said structure. The resultant sum of vacuum and pressure creating a vertical lift and permitting the circular wing to hover or move anywhere under the direction of a navigator.

One object of this invention is to provide a circular wing for aircraft provided with motive means to create a vertical lift.

Another object of this invention is to provide a circular wing aircraft and motive means to create a vertical lift.

Still another object of this invention is to provide a circular wing aircraft provided with one single centrally located opening said circular wing aircraft resembling a doughnut-shaped fuselage.

Still another object of this invention is to provide a round-shaped wing structure for aircraft provided with more than one opening such as two, three, four etc., located centrally in respect to the vertical axis of said round-shaped wing structure.

Still another object of this invention is to provide motive means within the centrally located opening or openings in said round-shaped wing fuselage.

Still another object of this invention is to provide propeller means within the centrally located opening or openings in said round-shaped wing fuselage.

Still another object of this invention is to provide a round-shaped wing fuselage provided with rotor means within centrally located opening or openings in said round-shaped wing fuselage.

Still another object of this invention is to provide a saucer-shaped aircraft which will have one, two, three, four or even more air intakes which will be located upon its outer surface leading into its fuselage. Said openings will contain propellers or air rotors to create a flow of air. The propellers and air rotors can be operated by means of reciprocating engines, electric motors, jets etc.

Another object of this invention is to provide an arrangement of wing structure and motive force to create a stream of air which being drawn from above said aircraft and its wing will be directed below it. This action producing a vertical lift.

Another object of this invention is to provide a doughnut-shaped craft having a circular wing of airfoil cross-section and means to pass a stream of air against said wing. The aerodynamic action of the air against said wing permitting the saucer doughnut-shaped craft not only to rise vertically but also to hover over the same position indefinitely or move saidways or in any other direction under the control of a navigator and crew.

Still another object of this invention is to create a flow of air and direct it against the inside edge of a circular airfoil differentiating from a straight airfoil. The action of the air blown against the inside edge of the circular wing creating a vacuum space over the wing and an air pressure space under it thus making it possible for said wing to take off vertically.

A further object of this invention is to provide a fuselage of a round-shaped wing contour which will contain an air inlet or hole in its center. The round-shaped wing being stationary in relation to a set of rotating propellers

367 || @HighEarthOrbit_ linktr.ee/Grider2

or air rotors. The propellers or rotors being located adjacent to said air inlet. The action of the propellers or rotors creating a stream of air through said inlet in the round-shaped wing.

Still another object of this invention is to provide double acting propeller means within the openings in said round-shaped wing fuselage.

Still another object of this invention is to provide a circular wing structure and reciprocating engine means or electric motor means to operate propellers or rotors contained within opening leading into said wing structure.

A still further object of this invention is to provide a round-shaped wing structure and air pump means located within openings leading through said round-shaped structure.

Still another object of this invention is to provide a round-shaped wing structure, holes passing through said structure, propeller or rotor means located within said holes. Said holes being equipped with baffle plates to direct a stream of air entering said holes from above through the holes in said wing structure.

Still another object of this invention is to provide a round-shaped wing structure resembling a doughnut, a single hole passing in the center portion of said structure, propeller or air rotor means inside said hole. Said hole being provided with baffle plates to direct a stream of air entering said holes against the wall portion comprising said holes in said wing structure.

Still another object of this invention is to provide a round-shaped wing structure comprising an airfoil with a single opening in its center, said wing structure resembling a doughnut-shaped wing, having a propeller or air motor means located within said opening. Said round-shaped wing provided also with a baffle plate within said circular opening for directing the air entering said opening from above against the internal edge of said airfoil.

A still further object of this invention is to provide a circular wing structure, said structure in cross-section being similar to the cross-section of standard airplane wings, or air foils.

A still further object of this invention is to provide a circular wing structure which has a number of openings running around its periphery, these openings provided with propeller or rotor means and motor means to operate said propeller or rotors.

A still further object of this invention is to provide a circular wing structure having one or more openings passing through said structure and cable means to supply electric current to electric motors located within said openings to operate rotors or propellers.

A still further object of this invention is to provide a spherical aircraft which is equipped with one, two or more concentric openings leading into said aircraft, said openings equipped with air rotors or propellers and motive means to operate said propellers to create a stream of air from above and direct it below.

A still further object of this invention is to provide a spherical aircraft provided with a central opening which contains an engine to operate propellers or air rotors to create a stream of air and to direct it against one or more circular wing-shaped airfoils.

A still further object of this invention is to provide a square or polygonal shaped wing fuselage which is equipped with one or more openings and propellers or air rotors in said openings.

A still further object of this invention is to provide a square shaped or polygonal wing fuselage which in cross-section is a standard airfoil wing, said fuselage being provided with one or more co-centric openings, propellers in said openings, and motive means to operate said propellers.

A still further object of this invention is to provide an ellipse-shaped wing structure containing one or two or more openings, propeller or air rotor means in said openings and motor means to operate said propellers or rotors.

A still further object of this invention is to provide a circular wing structure which has a number of openings running around the periphery, these openings provided with propeller or rotor means and motor means to operate said propellers.

A still further object of this invention is to provide a circular wing structure having one or more openings passing through said structure and cable means to supply electric current to electric motors located within said openings to operate rotors.

A still further object of this invention is to provide a spherical aircraft which is equipped with one, two or more co-centric openings leading into said craft, said openings equipped with air rotors or propellers and motive means to operate said propellers to create a stream of air from above and direct it below the wing structure of said aircraft.

A still further object of this invention is to provide a spherical aircraft equipped with a central opening which contains an engine to operate propellers or air rotors to create a stream of air and to direct it against one or two or more circular wing-shaped airfoils located in said aircraft.

A still further object of this invention is to provide a square or polygonal shaped wing fuselage which may be equipped with one or more openings and a set of propellers in said openings.

A still further object of this invention is to provide a square-shaped or polygonal wing fuselage which in cross-section resembles an airfoil. Said fuselage being provided with multiple co-centric openings, with propellers in said openings, and motive means to operate said propellers.

A still additional object of this invention is to provide an ellipse-shaped wing structure which may contain one or more openings, with propellers or rotor means in said openings and with motive means to operate said rotors or propellers.

Other objects will appear as the description of this specification will proceed.

Referring to figures:

FIG. 1 is a cross-section through a circular saucer-shaped wing fuselage showing the co-centric opening, propeller and reciprocating motor means to operate said propeller to create a stream of air from above and to direct it below said fuselage.

FIG. 2 is a cross-section through a circular doughnut-shaped wing structure showing co-centric opening, propeller means in said opening and reciprocating motor means to operate said propeller to create an air flow from below said structure and direct it against the inside edge of said doughnut-shaped wing structure.

FIG. 3 is a cross-section through a circular doughnut-shaped wing structure showing a co-centric opening and a reciprocating motor means operating an air rotor to create a flow of air from above said wing and to direct said air against the inside edge of the opening in the wing.

FIG. 4 is a cross-section through a circular saucer-shaped wing fuselage, motor means located within openings located in said wing and reciprocating engines to operate said rotors or propellers to create a flow of air from above said wing and to direct it below.

FIG. 5 is a plan view of the circular saucer-shaped wing fuselage on the line **5—5** of FIG. 1, showing one co-centric opening.

FIG. 6 is a plan view of the circular saucer-shaped wing fuselage taken on the line **6—6** of FIG. 4, showing more than one co-centric openings.

FIG. 7 is a cross-section through a circular wing, showing co-centric opening, propeller and reciprocating motor means and its application as an army transport vehicle.

FIG. 8 is a circular doughnut-shaped wing structure similar to the one shown in FIG. 7, equipped with an

368 || @HighEarthOrbit_ linktr.ee/Grider2

airfoil wing and reciprocating engine to operate a propeller to direct a flow of air against said airfoil.

FIG. 9 is a cross-section through a circular wing structure showing more than one co-centric openings which are equipped with propeller and reciprocating engines to create an air flow from above and direct it below said wing structure.

FIG. 10 is a craft similar to the one shown in FIG. 9, equipped with a number of openings located peripheral to the center of the wing. The openings are equipped with propellers and reciprocating engines to create a flow of air from above said structure and direct it below.

FIG. 11 is a plan view on the line 11—11 of FIG. 10.

FIG. 12 is a plan view taken on line 12—12 of FIG. 7.

FIG. 13 is a view taken on the line 13—13 of FIG. 9.

FIG. 14 is a view showing the application of the circular saucer-shaped wing in connection with standard airplane fuselages to create a vertical lift.

FIG. 15 is a cross-section through a spherical fuselage showing a co-centric opening and propeller and reciprocating engine means to create a flow of air from above and direct it against the inside airfoil edge of circular saucer-shaped wings within said spherical fuselage.

FIG. 16 is a cross-section through a circular wing showing the co-centric opening and a propeller means being operated by an electric motor to create a flow of air from above said structure. It also shows the electric cable means which provides electric current from the ground which is generated by a stationary generator or a portable generator station.

FIG. 17 shows a plan view of a square-shaped doughnut wing equipped with more than one co-centric openings through which a flow of air is directed from above the wing below it.

FIG. 18 shows the manner in which a city can be protected by means of doughnut-shaped flying saucers from enemy aerial attacks. The flying saucers hovering, like flying forts, above the objective to shoot down the enemy aircraft.

FIG. 19 is a view showing the manner the flying saucer is launched vertically, how it hovers above ground and travels parallel to the ground and how it lands straight down. It is made to hop and hover from one place to another.

FIG. 20 is a cross-section through a flying saucer bus showing the arrangement of parts, the location of the passenger seats, the navigator's cabin and the propellers within the air inlets. Also the manner of operation.

FIG. 21 is a cross-section through a lighter than air craft, showing the manner in which the propellers or air rotors are contained within the air inlet channels and the application of airfoil surfaces to produce a vertical lift and transverse motion.

FIG. 22 is a section through the airfoil wing showing the application of a jet engine for the purpose of creating an air stream. The air stream created by the suction of the jet engine intake is diverted by means of baffle plates against the airfoil to create vertical lift.

FIG. 23 is an elevational view of FIG. 22, showing the circular wing with the jet engine to produce an air stream.

FIG. 24 is an elevational view of the air bus having a circular fuselage showing the air duct, the prime-mover and propeller means, and the arrangement of doors and windows around its circumference.

FIG. 25 is a section on the line 25—25 of FIG. 24, showing the air bus' interior with its seating capacity, the driver's seat, the driving instruments, and the duct passing through the fuselage.

FIG. 26 is a plan elevational view of a bus similar to the one shown in FIGS. 24 and 25, with its fuselage being provided with more than one air duct. The bus in this case has a fuselage with three vertical ducts.

FIG. 27 is a section on the line 27—27 taken through the bus in FIG. 26, showing the seating arrangement, the driver's seat, instruments and the air ducts passing through the fuselage.

FIG. 28 is a plan elevational view of a bus similar to the one shown in FIGS. 24 to 27 inclusive. In this case the fuselage is somewhat elongated, rather an ellipsoid, instead of circular.

Specifications

Referring more particularly to FIG. 1, numeral **30** indicates the fuselage of the saucer-shaped circular wing which consists of an outside peripheral rim **31** and an inside circular opening **32**. The opening or hole **32** in the circular fuselage **30** gives the wing a doughnut-shaped contour.

Preferably, in cross-section ,the circular wing resembles a standard airfoil, although it may possess any other cross-section such as circular, elliptical, parabolic, hyperbolic or rectangular.

A cabin-shaped structure **33** is suspended under the circular wing **30** and is secured to the latter preferably by means of cables **34**, or in some other manner. The cabin **33** might also be contained within the structure of the wing proper. A prime mover comprising a reciprocating engine **35** is suspended inside the circular opening **32** in the wing **30**. Propeller means **36**, comprising one or two propellers or an air rotor, is geared to the reciprocating engine **35** to be operated by the latter.

The propeller means **36** operated by the engine **35** creates a flow of air through the opening **32**. The air being drawn from the top over the wing, by the action of the rotating propeller blades, passes through the circular opening **32** and is directed below and under the wing **30**.

In FIG. 2, which shows a saucer-shaped wing similar in construction to the one shown in FIG. 1, a circular baffle disk **37** is contained within the circular opening **32** in the doughnut-shaped wing **30**. This arrangement is preferable when the propeller means **36** is rotated in such a manner as to create a flow of air from under circular wing directing it against the baffle disk **37**. Some of the air thus directed will pass through the space **38** formed by the inside edge **32*x*** of the opening **32** in the wing **30** and some will be blown directly under the circular wing proper.

Referring to FIG. 3, an air rotor **39** is utilized to create a flow of air from above the wing **30**. Preferably the rotor **39** is placed above the opening **32**. The opening **32** is also provided with a pair of circular baffle disks **40** and **41**. The reciprocating means **35** which rotates the air rotor **39** creates a flow of air directing it through the spaces **42** and **43** which are formed by the inside edge **32*x*** in the opening **32** of the wing **30**, the baffle disk above the wing and the baffle disk below it.

Referring more particularly to FIG. 4, it illustrates the application of the same principle of air flow as shown in FIGS. 1–3 inclusive having a wing **30*x*** similar in construction to the one shown in said figures but being also equipped with a plurality of openings **32*x*** instead of one. Propeller means **36*x*** which are located in the immediate proximity of the openings **32*x***, or inside said openings, are being operated by reciprocating engine means. Said means creating a flow of air from above the wing **30*x***, and through the openings **32*x*** directing the air under the wing proper.

FIGS. 5 and 6 respectively show views taken on the line 5—5 of FIG. 1, and 6—6 of FIG. 4.

FIGS. 7 to 13 inclusive, show the application of the flying saucer principle to transport vehicles, for commercial or military use such as air buses, army transport, fortifications etc.

In FIG. 7, numeral **49** is the fuselage of the vehicle preferably of circular contour. A reciprocating motor means **46** is located in a centrally located opening **45**; the motor means **46** operating a set of counter-driven propellers **47**. The vehicle is also equipped with a landing gear **48** which includes a set of inflated rubber tires or the

369 || @HighEarthOrbit_ linktr.ee/Grider2

like. The vehicle shown in FIG. 7 can be used for passenger service or troop transport. It can be equipped with gun turrets **49** and other defense weapons.

In the vehicle shown in FIG. 8, it is very similar in construction to the one shown in FIG. 7, differentiating only in the fact that an extra doughnut-shaped wing **50** is added to it. The wing **50** is located in the lower portion of the vehicle **44**. A baffle disk **51** is utilized to direct the air through the space **52**, above the wing **50** and through the space **53** below the wing **50**.

Referring to FIG. 9, it shows the application of a plurality of prime movers **46***x* in connection with more than one openings **45***x* through which air is sucked by the action of propeller means **47***x* in the openings **45***x*. Propeller means **47***x* are operated by the prime mover means **46***x*.

FIG. 10 shows the application of the flying saucer principle in connection with a plurality of prime mover means which are placed upon the outside circumference or periphery of the vehicle. In this particular case the openings **45***xx* are located peripherally the cabin **54**. The prime mover means **46***xx* drive propeller or rotor means **47***xx* which are set within the openings **45***xx* in the vehicle.

FIG. 11 is a plan view of FIG. 10, showing the manner in which the multipowered units **46***xx* are arranged upon the vehicle **44***xx*.

FIGS. 12 and 13 are plan views taken on the lines **12—12** of FIG. 7 and **13—13** of FIG. 9 respectively.

FIG. 14 shows the application of the flying saucer principle in connection with standard airplane fuselages. In this particular case the doughnut-shaped wing is secured to the plane **57** by a connecting structure **56**. The prime mover which is driving the air rotor **58** creates a flow of air from above the wing **55** directing it below same to produce a vertical lift. Jet motors or propeller means **60** are used to provide forward motion.

Referring more particularly to FIG. 15, the vehicle **61** is of a spherical contour and includes a spherical fuselage **62** which has one, two, three, four or more openings **63**. A prime mover **64** is located within the opening **63** to operate a pair of counter-moving propeller means **65**. The stream of air created by the propeller means **65** is directed through the space **66** above the saucer-shaped wings **67** and below said wings through the space **68**. The baffle disks **69** and **70** serve to direct the air.

FIG. 16 shows a vehicle **71**, similar in construction to the one shown in FIGS. 1 to 15 inclusive, in this particular case the propeller means **73** is being operated by means of an electric motor **72** instead of a reciprocating engine means. The electric motor **72** drives the propeller means **73** which is located within the openings **74**. A flexible electric cable means **75** leads from the electric motor **72** to a portable or stationary generating station **76**. The electric current generated by the generating station **76** is delivered to the vehicle **71** by means of the cable means **75** which is wound around cable-reel **77**.

In FIG. 17 is shown a vehicle **78** similar in construction to the one shown in FIGS. 1 to 16 inclusive, preferably of rectangular contour. The wing **78** is equipped with propeller means **79** which are located within the opening **80** and are operated by prime mover means (not shown).

FIG. 18 is showing the manner in which the flying saucer shown in FIGS. 1 to 17 inclusive can be operated in warfare for defense purposes to protect a city from enemy attacks. Some flying saucers F shown in FIG. 18 are operated by means of reciprocating engines while others by means of electric motors which are fed electric current through the medium of the flexible cables L. The attacking enemy planes are designated as E.

FIG. 19 shows the manner in which the flying saucer can be utilized as a transport vehicle and the manner in which it can move or hop from place to place. Upon landing the vehicle F goes straight up as shown at A. It is flying across the country as it is shown at B and it lands, straight down as it is shown at C.

FIG. 20 shows the application of the flying saucer principle to air buses. Numeral **92** designates the fuselage of the air bus, **93** the propellers which are driven by motors **95**. The air is sucked by the propellers **93** through the vertical inlets **94**. The passenger seats **97** are located around the circumference of the vehicle and the driver's cabin **96** faces forward. The windows **98** permit outside vision while door opening **97** permits the loading of the craft.

Referring to FIG. 21, it is showing the application of the flying saucer principle to lighter than air craft. Numeral **100** designates the body of the craft which supports cabin **101** under its fuselage. The craft **100** is equipped with a number of canals **102**, **103** and **104** which are vertically located within its fuselage. Propeller and motor units **105**, **106** and **107** serve to create a stream of air from above the craft and direct it under its belly. In the case of the canal **102**, the air is directed towards the lower portion of its fuselage while in the case of the canals **103** and **104** the air flow is directed against the airfoil wings **108**, located under the belly of the craft **100** to create a vertical lift which is independent from the lift created by the craft's gas tanks.

The stream of air thus produced by the propeller and motor units **106** and **107** also produces a horizontal force which drives the lighter than air craft forward in addition to the lift created by said wings because of their airfoil cross-section.

The application of the saucer principle herein described to lighter than air craft will dispense with the need for large gas tanks to lift the vehicle and permit the use of smaller fuselage and create a greater lift.

What I claim is:

1. An air bus comprising a circular fuselage having an entry and an exit door and windows around its outer circumference, a driver's seat and navigational instruments mounted in said fuselage; said vehicle having a centrally located vertical duct passing through said fuselage, a vertical shaft mounted in the duct, a prime mover engine means in said duct to operate said shaft, propeller means fastened to said shaft to rotate when said prime mover operates said shaft, said duct having an opening, baffle plates mounted in said duct opening to divert the flow of air created by the operation of said propeller to fly said vehicle, and shock absorbing means mounted on said fuselage to facilitate safe launching and landing in said air bus.

2. A vehicle comprising a circular fuselage having an entry and an exit door and windows around its outer circumference, a driver's seat and navigational instruments mounted in said fuselage, said vehicle having more than one vertical duct passing through said fuselage, a vertical shaft mounted in each duct, a prime-mover engine means in each duct to operate each shaft, propeller means fastened to each shaft to rotate when each prime-mover operates its respective shaft, each duct having an opening, baffle plates mounted in said duct openings to divert the flow of air created by the operation of said propellers to fly said vehicle, and shock absorbing means mounted on said fuselage to facilitate safe launching and landing of said vehicle.

3. A vehicle comprising a circular fuselage having an entry and an exit door and windows around its outer circumference, a driver's seat and navigational instruments mounted in said fuselage, said vehicle having a centrally located vertical duct passing through said fuselage, a vertical shaft mounted in the duct, a prime-mover engine means in said duct, said prime-mover comprising an electric motor, propeller means fastened to said shaft to rotate when said electric motor operates said shaft, said duct having an opening, baffle plates mounted in said duct

370 || @HighEarthOrbit_ linktr.ee/Grider2

opening to divert the flow of air created by the operation of said propeller to fly said vehicle, shock absorbing means mounted on said fuselage to facilitate safe launching and landing of said vehicle, and an electric cable leading from said motor in said vehicle to a power generating means on the ground, said cable trailing from said vehicle when said vehicle takes off.

4. An air vehicle comprising an elliptically-shaped fuselage having an exit and an entry door and windows around its outer contour, a driver's seat and navigational instruments mounted in said fuselage, said vehicle having more than one vertical duct passing through said fuselage, a vertical shaft mounted in each duct, a prime-mover engine means in each duct to operate each shaft, propeller means fastened to each shaft to rotate when said prime-movers operate said shafts, each duct having an opening, baffle plates mounted in said duct openings to divert the flow of air created by the operation of said propellers to fly said vehicle, and shock absorbing means mounted on said fuselage to facilitate safe launching and landing.

References Cited in the file of this patent

UNITED STATES PATENTS

1,846,125	La Fon	Feb. 23, 1932
1,911,041	Smyser	May 23, 1933
2,008,464	Nishi	July 16, 1935
2,399,218	Felberg	Apr. 30, 1946
2,468,787	Sharpe	May 3, 1949
2,547,266	Hoglin	Apr. 3, 1951
2,726,829	Hillis	Dec. 13, 1955
2,730,311	Doak	Jan. 10, 1956
2,876,964	Streib	Mar. 10, 1959

FOREIGN PATENTS

16,153	Great Britain	of 1908
129,142	Great Britain	July 10, 1919
691,627	France	July 15, 1930
406,971	Great Britain	May 30, 1932
1,138,029	France	Jan. 21, 1957

371 || @HighEarthOrbit_ linktr.ee/Grider2

Jan. 10, 1956 LE ROY W. CROOKES 2,730,312

DISCOID-SHAPED AIRCRAFT

Filed Nov. 23, 1953

Fig. 1

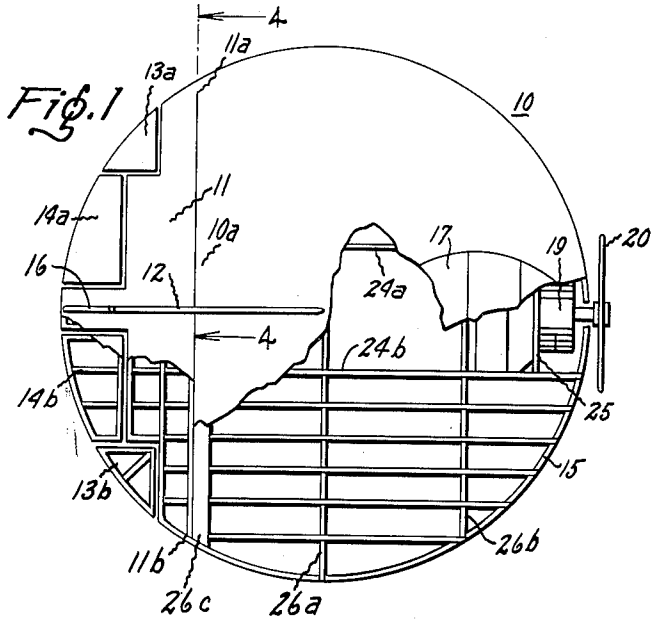

Fig. 4

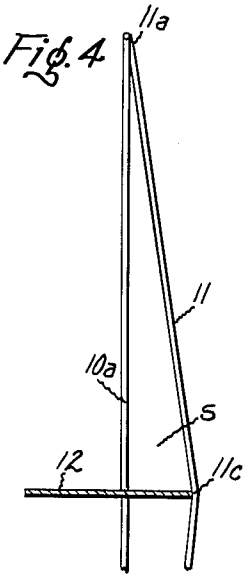

Fig. 2

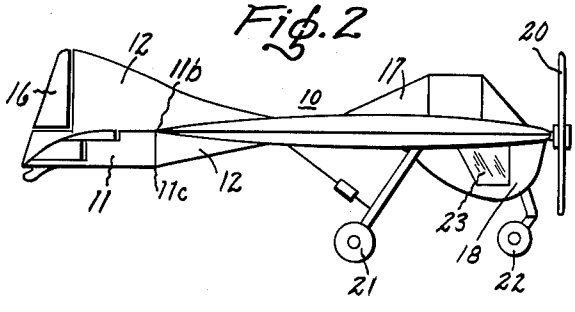

Fig. 5

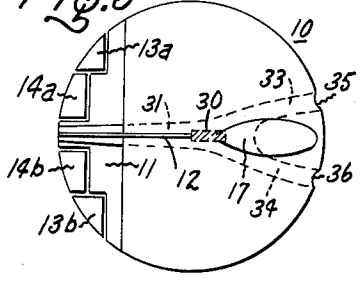

Fig. 3

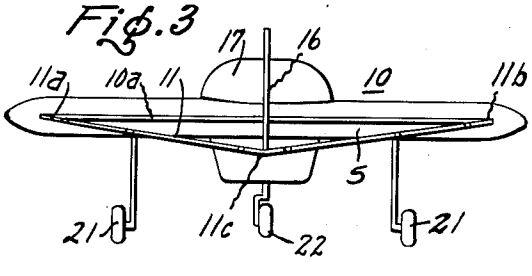

Fig. 6

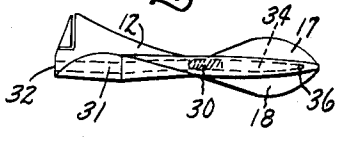

Inventor

Le Roy W Crookes

372 || @HighEarthOrbit_ linktr.ee/Grider2

United States Patent Office

2,730,312

Patented Jan. 10, 1956

1

2,730,312

DISCOID-SHAPED AIRCRAFT

Le Roy W. Crookes, Scotia, N. Y.

Application November 23, 1953, Serial No. 393,881

3 Claims. (Cl. 244—13)

This invention relates to aircraft, particularly of the heavier-than-air type, and one of the objects is to provide an improved discoid form of aircraft that will appear to be substantially circular in shape when viewed from the top or bottom and thus in flight appears as a "flying saucer."

Another object of the invention is to provide an improved flying saucer type of aircraft having a main air foil of truncated disc or discoid shape to provide a circular leading edge combined with a complementary trailing segmental dihedral horizontal stabilizer as well as an interconnecting vertical stabilizer in order to obtain inherent structural ruggedness, as well as inherent stability in flight, slower landing speeds, increased and more economical cruising speeds, and also to enable all the necessary structural members to be enclosed within the main air foil and stabilizer surfaces.

In a passenger carrying aircraft embodying the present invention, the engine and passengers' compartment may be partly or entirely closed within the main air foil surfaces depending upon the relative size and thickness of the main air foil of the aircraft which may be powered by a jet reciprocating engine driven propeller, or flown as a glider, but the improved form of aircraft may be built in any size from a small model glider or model-miniature engine driven craft up to a large transport capable of carrying maximum loads.

In each case the invention resides in the improved substantially truncated main disc or discoid air foil and the complementary trailing stabilizer structural combinations as set forth in the ensuing disclosure and having with the above other objects and advantages as hereinafter pointed out. The improved construction details and the manner of cooperation of the components will be made manifest in the following description of the illustrated embodiments; it being understood that modification, variation and adaptation may be resorted to within the scope, spirit and principle of the invention as it is claimed in conclusion hereof.

In the drawing, Fig. 1 is a plan view of a typical propreller driven two passenger-carrying "flying saucer" embodying the invention. Fig. 2 is a side elevation of the aircraft shown in Fig. 1. Fig. 3 is a rear elevation of the aircraft structure shown in Fig. 1. Fig. 4 is a partial sectional view along the lines 4—4 looking in the direction of the arrow in order to show more clearly the dihedral form of the segmental shaped horizontal stabilizer. Figs. 5 and 6 show a typical jet propelled form of the "flying saucer" embodying the improvements of the present invention.

In accordance with the principles of the present invention, the main flight or lifting air foil generally designated by the reference character **10** is made substantially of truncated disc or discoid shape to provide a circular leading edge and a linear trailing edge **10***a* as shown in Fig. 1 and preferably provided with a suitable peripheral taper at all of its edges as shown in Figs. 2 and 3 in order to increase the aerodynamic efficiency. The horizontal stabilizer indicated generally by the reference character **11** is shaped as a complementary trailing segment to the air foil **10** as shown in Fig. 1 and is of dihedral form as indicated in Figs. 3 and 4. The depressed or offset center **11***a* of the dihedral horizontal stabilizer **11** is joined to and supported by the bottom of the vertical stabilizer **12** that extends from the air foil **10** normal to the linear trailing edge **10***a* thereof. The dihedral surfaces of the segmental horizontal stabilizer are inclined so as to provide a negative angle of attack relative to the main air foil **10**. Thus with this dihedral construction the air can flow in normal level flight from the under side of the main air foil **10** to the upper side of the dihedral horizontal stabilizer **11**. The tips **11***a* and **11***b* thereof are joined to and firmly supported by the ends of the linear trailing edge **10***a* of the main air foil. Such improved construction gives the whole aircraft inherent ruggedness since the component elements cooperate to mutually reinforce each other. The ruggedness of the whole aircraft is further increased by the reinforced circular structural member **15** which circumferentially encloses substantially the entire main air foil **10** and extends therefrom so as to connect the tips **11***a* and **11***b* of the segmental horizontal stabilizer **11** to the ends of the linear trailing edge **10***a* of the main air foil **10**. The trailing edge of the horizontal stabilizer **11** is symmetrically notched so as to have inserted therein the relatively movable semi-segmental elevators **14***a*, **14***b* and the ailerons **13***a* and **13***b* that are used for controlling the path and attitude of the aircraft in flight and still provide an overall circular configuration.

In order to house passengers, a suitable canopy **17** may be provided on the upper side of the main wing **10**, and a suitable foot well **18** on the lower side so as to form an enclosed compartment as shown in Fig. 2 in case the wing **10** is of insufficient thickness to house the passengers completely therein. A suitable engine **19** may be enclosed within the center of the leading edge of the main wing **10** with the shaft extended to drive the propeller **20**. The landing gear may be of the conventional three-point type comprised of the two main wheels **21** and the nose wheel **22**.

The improved aircraft construction is inherently rugged due to the omission of long or thin air foil members and the fact that the whole outer periphery of the "flying saucer" is a reinforced continuous generally circular structural member except for the inserted ailerons and elevators. The dihedral or V shape of the horizontal stabilizer **11**, as viewed from the back in Fig. 3 inherently adds rigidity to the vertical stabilizer **12** and vice versa and also inherently forms a laterally tapered air slot generally indicated as *s* in Figs. 3 and 4 that gives each stabilizer as well as the other control elements carried thereby a fresh supply of air to insure more accurate and better control under adverse flying conditions.

When built the 18-foot diameter improved "flying saucer" becomes equivalent to the standard light personal plane of today. Both may be powered with a 65 to 125 H. P. engine. Both will carry two to four people. The standard airplane requires a wing span of approximately 36 feet, while in comparison the "flying saucer" requires only an 18-foot wing span but provides 50 percent more effective wing area. This enables the improved craft to land at a slower speed in areas which would otherwise be inaccessible to the usual craft of today. Typical details of construction suitable for an 18-foot diameter "flying saucer" of the improved form shown in Figs. 1, 2, 3 and 4 may be as follows.

Practically the entire outer edge of the ship may be formed of a strong continuous aluminum tube **15** formed into substantially circular shape so as to extend entirely around the leading edge of the main air foil **10** and back to the ailerons **13***a* and **13***b*. Preferably a pair of main ribs **24***a* and **24***b* are extended perpendicularly

373 || @HighEarthOrbit_ linktr.ee/Grider2

from the linear trailing edge **10***a* of the main air foil **10** on either side of the passenger compartment as indicated in Fig. 1.

The main ribs **24** are preferably formed of light aluminum tubing suitably curved into an air foil shape as shown in Fig. 2 and are reinforced in the usual way with cross braces of aluminum tubing. The engine bulkhead **25** is mounted between these two main ribs. The pair of main spars **26***a* and **26***b* are made of aluminum bridge type construction. One spar **26***a* preferably is located as shown in Fig. 1 at the transverse diameter of the discoid main air foil **10** which is perpendicular to the line of flight and parallel to the linear trailing edge **10***a* thereof. The other spar **26***b* preferably is located immediately in back of the passenger compartment. From this spar **26***b* the main landing gear is mounted. The trailing edge **10***a* of the main lifting air foil **10** preferably is formed by a linear triangularly shaped aluminum beam **26***c*. The main air foil **10** may be covered with suitable fabric or thin aluminum sheet except the area next to the cockpit which is covered with reinforced aluminum so it can be used as a catwalk. The foot well **18** preferably is made of aluminum tubing covered with fabric. The floor boards inside of the foot well may be made of corrugated aluminum. The canopy **17** preferably is made of transparent molded plastic with the central section movable for the entrance of the passengers. Preferably there are also the plastic glass windows **23** in the lateral surfaces of the foot well **18** to provide increased visibility. These are shown in Fig. 2 and indicated as **23**.

The main landing wheel gear **21** is mounted to the forward main spar **26***b* and the shock absorber is mounted to the aft main spar **26***a*. The nose wheel gear **22** may be mounted to the engine bulkhead **25**. The landing gear may be of the stationary or retractable type.

The vertical stabilizer **12** is made of aluminum tubing and joined securely to the spars **26***a* and **26***c*. The base of this stabilizer **12** at the trailing edge **10** of the main air foil is approximately 1½ feet below the trailing edge **10***a* and is formed approximately at a 3-degree negative angle of attack so as to support the depressed or offset center **11***a* of the horizontal dihedral stabilizer **11** of segmental form. As previously pointed out, this construction enables the vertical stabilizer to reinforce the horizontal stabilizer and vice versa. Each stabilizer preferably is fabric covered. The rudder **16** carried by the vertical stabilizer **12** may be made of aluminum tubing and fabric covered. The dihedral and segmental horizontal stabilizer **11** is made of aluminum tubing and fabric covered and the depressed center **11***c* of this stabilizer mounts rigidly to the base of the vertical stabilizer **12**. With the tips **11***a* and **11***b* of the horizontal stabilizer mounted to the ends of the linear trailing edge of the main air foil **10**, the dihedral surfaces of the horizontal stabilizers **11** are therefore mounted at approximately a 15-degree angle to each other.

When built in accordance with the principles of the present invention, the improved "flying saucer" will land in a shorter and smaller area than conventional craft of today, has a lower landing speed, requires less takeoff run, is more economical at cruising altitudes, and is virtually stall, spin and ground loop proof.

In the jet propelled form of flying saucer shown in Figs. 5 and 6, the main air foil **10** and the trailing horizontal stabilizer **11** and the vertical stabilizer **12** have the same aerodynamic relations as previously described, but their internal construction is slightly modified. Thus the jet engine **30** is enclosed within the main air foil **10** behind the passenger compartment formed by the canopy **17** and the foot well **18**, and is provided with a tail pipe **31** that extends aft through the lower part of the vertical stabilizer **12** so that the propelling jet may be exhausted at **32** between the elevators **14***a* and **14***b* in substantial alignment with the flight axis of the aircraft. Combustion air is supplied to the jet engine **30** through forked air passages **33** and **34** that extend inside of the main air foil **10** on opposite sides of the passenger compartment, and are provided with the air inlet openings **35** and **36** located adjacent the leading circular edge of the main air foil **10**.

What I claim as new and desire to secure by Letters Patent of the United States, is:

1. An aircraft having in combination, a main air foil of truncated discoid planform to provide a circular leading edge, a trailing horizontal stabilizer of complementary trailing segmental form having the tips thereof joined to the ends of the trailing edge of the main air foil and having the center thereof depressed from the trailing edge of the main air foil, and a vertical stabilizer extending substantially diametrically from the main air foil midway of the trailing edge thereof to support the depressed center of the horizontal stabilizer.

2. An aircraft having in combination, a main air foil of substantially truncated discoid planform to provide a circular tapered leading edge and a linear tapered trailing edge, a complementary trailing segmental horizontal stabilizer of dihedral form having the tips thereof joining and supported by the ends of the linear trailing edge of the main air foil to offset the center thereof from the linear trailing edge of the main air foil, and a vertical stabilizer extending diametrically from the main air foil normally midway of the linear trailing edge thereof to support the offset center of the dihedral horizontal stabilizer.

3. An aircraft having in combination, a main air foil of substantially truncated discoid planform having a substantially linear trailing edge and provided with spaced beams extending perpendicular to the trailing edge and transverse spars extending parallel with the trailing edge and having a circular edge supporting member joined to the ends of the beams and spars and extending beyond the trailing edge of the main air foil, a complementary segmental horizontal stabilizer of dihedral form having the tips thereof supported by the extended ends of the circular edge supporting member of the main air foil and having the center of the dihedral offset from the linear trailing edge of the main air foil, and a vertical stabilizer mounted on the spars to extend substantially diametrically from the main air foil midway of the linear trailing edge thereof to support the offset center of the dihedral horizontal stabilizer.

References Cited in the file of this patent

UNITED STATES PATENTS

1,523,994	Myers	Jan. 20, 1925
1,887,411	Johnson	Nov. 8, 1932
1,981,700	Hoffman	Nov. 20, 1934

FOREIGN PATENTS

5,282	Great Britain	of 1912
2,421	Great Britain	of 1914